Binary/Decade Up/Down Counter

MC14029B

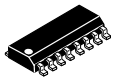

SOIC-16
D SUFFIX
CASE 751B

The MC14029B Binary/Decade up/down counter is constructed with MOS P-channel and N-channel enhancement mode devices in a single monolithic structure. The counter consists of type D flip-flop stages with a gating structure to provide toggle flip-flop capability. The counter can be used in either Binary or BCD operation. This complementary MOS counter finds primary use in up/down and difference counting and frequency synthesizer applications where low power dissipation and/or high noise immunity is desired. It is also useful in A/D and D/A conversion and for magnitude and sign generation.

Features

- Diode Protection on All Inputs
- Supply Voltage Range = 3.0 Vdc to 18 Vdc
- Internally Synchronous for High Speed
- Logic Edge-Clocked Design − Count Occurs on Positive Going Edge of Clock
- Asynchronous Preset Enable Operation
- Capable of Driving Two Low-Power TTL Loads or One Low-Power Schottky TTL Load Over the Rated Temperature Range
- Pin for Pin Replacement for CD4029B
- NLV Prefix for Automotive and Other Applications Requiring Unique Site and Control Change Requirements; AEC-Q100 Qualified and PPAP Capable
- This Device is Pb-Free and is RoHS Compliant

MARKING DIAGRAM

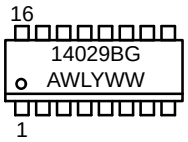

A	= Assembly Location
WL	= Wafer Lot
YY, Y	= Year
WW	= Work Week
G	= Pb-Free Indicator

ORDERING INFORMATION

See detailed ordering and shipping information in the package dimensions section on page 2 of this data sheet.

MAXIMUM RATINGS (Voltages Referenced to V_{SS})

Symbol	Parameter	Value	Unit
V_{DD}	DC Supply Voltage Range	−0.5 to +18.0	V
V_{in}, V_{out}	Input or Output Voltage Range (DC or Transient)	−0.5 to V_{DD} + 0.5	V
I_{in}, I_{out}	Input or Output Current (DC or Transient) per Pin	±10	mA
P_D	Power Dissipation, per Package (Note 1)	500	mW
T_A	Ambient Temperature Range	−55 to +125	°C
T_{stg}	Storage Temperature Range	−65 to +150	°C
T_L	Lead Temperature (8-Second Soldering)	260	°C

Stresses exceeding those listed in the Maximum Ratings table may damage the device. If any of these limits are exceeded, device functionality should not be assumed, damage may occur and reliability may be affected.

1. Temperature Derating: “D/DW” Packages: –7.0 mW/°C From 65 °C To 125 °C

This device contains protection circuitry to guard against damage due to high static voltages or electric fields. However, precautions must be taken to avoid applications of any voltage higher than maximum rated voltages to this high-impedance circuit. For proper operation, V_{in} and V_{out} should be constrained to the range $V_{SS} \le (V_{in}$ or $V_{out}) \le V_{DD}$.

Unused inputs must always be tied to an appropriate logic voltage level (e.g., either V_{SS} or V_{DD}). Unused outputs must be left open.

© Semiconductor Components Industries, LLC, 2011

Downloaded from Arrow.com.

PIN ASSIGNMENT

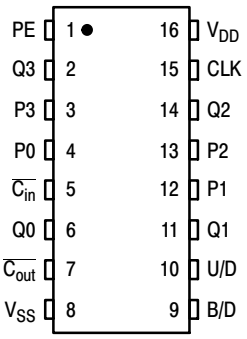

TRUTH TABLE

$\overline{\text{Carry In}}$	Up/Down	Preset Enable	Action
1	X	0	No Count
0	1	0	Count Up
0	0	0	Count Down
X	X	1	Preset

X = Don't Care

ORDERING INFORMATION

Device	Package	Shipping†
MC14029BDR2G	SOIC-16 (Pb-Free)	2500 Units / Tape & Reel
NLV14029BDR2G*	SOIC-16 (Pb-Free)	2500 Units / Tape & Reel

† For information on tape and reel specifications, including part orientation and tape sizes, please refer to our Tape and Reel Packaging Specifications Brochure, BRD8011/D.

* NLV Prefix for Automotive and Other Applications Requiring Unique Site and Control Change Requirements; AEC-Q100 Qualified and PPAP Capable.

Share Feedback
Your Opinion Matters

Downloaded from Arrow.com.

ELECTRICAL CHARACTERISTICS (Voltages Referenced to V_{SS})

Characteristic	Symbol	V_{DD} Vdc	−55 °C Min	−55 °C Max	25 °C Min	25 °C Typ (Note 2)	25 °C Max	125 °C Min	125 °C Max	Unit
Output Voltage “0” Level V_{in} = V_{DD} or 0	V_{OL}	5.0	–	0.05	–	0	0.05	–	0.05	Vdc
		10	–	0.05	–	0	0.05	–	0.05	
		15	–	0.05	–	0	0.05	–	0.05	
“1” Level V_{in} = 0 or V_{DD}	V_{OH}	5.0	4.95	–	4.95	5.0	–	4.95	–	Vdc
		10	9.95	–	9.95	10	–	9.95	–	
		15	14.95	–	14.95	15	–	14.95	–	
Input Voltage “0” Level	V_{IL}									Vdc
(V_O = 4.5 or 0.5 Vdc)		5.0	–	1.5	–	2.25	1.5	–	1.5	
(V_O = 9.0 or 1.0 Vdc)		10	–	3.0	–	4.50	3.0	–	3.0	
(V_O = 13.5 or 1.5 Vdc)		15	–	4.0	–	6.75	4.0	–	4.0	
“1” Level	V_{IH}									Vdc
(V_O = 0.5 or 4.5 Vdc)		5.0	3.5	–	3.5	2.75	–	3.5	–	
(V_O = 1.0 or 9.0 Vdc)		10	7.0	–	7.0	5.50	–	7.0	–	
(V_O = 1.5 or 13.5 Vdc)		15	11	–	11	8.25	–	11	–	
Output Drive Current	I_{OH}									mAdc
(V_{OH} = 2.5 Vdc) Source		5.0	–3.0	–	–2.4	–4.2	–	–1.7	–	
(V_{OH} = 4.6 Vdc)		5.0	–0.64	–	–0.51	–0.88	–	–0.36	–	
(V_{OH} = 9.5 Vdc)		10	–1.6	–	–1.3	–2.25	–	–0.9	–	
(V_{OH} = 13.5 Vdc)		15	–4.2	–	–3.4	–8.8	–	–2.4	–	
(V_{OL} = 0.4 Vdc) Sink	I_{OL}	5.0	0.64	–	0.51	0.88	–	0.36	–	mAdc
(V_{OL} = 0.5 Vdc)		10	1.6	–	1.3	2.25	–	0.9	–	
(V_{OL} = 1.5 Vdc)		15	4.2	–	3.4	8.8	–	2.4	–	
Input Current	I_{in}	15	–	±0.1	–	±0.00001	±0.1	–	±1.0	μAdc
Input Capacitance, (V_{in} = 0)	C_{in}	–	–	–	–	5.0	7.5	–	–	pF
Quiescent Current (Per Package)	I_{DD}	5.0	–	5.0	–	0.005	5.0	–	150	μAdc
		10	–	10	–	0.010	10	–	300	
		15	–	20	–	0.015	20	–	600	
Total Supply Current (Notes 3 & 4) (Dynamic plus Quiescent, Per Package) (C_L = 50 pF on all outputs, all buffers switching)	I_T	5.0	I_T = (0.58 μA/kHz) f + I_{DD}							μAdc
		10	I_T = (1.20 μA/kHz) f + I_{DD}							
		15	I_T = (1.70 μA/kHz) f + I_{DD}							

Product parametric performance is indicated in the Electrical Characteristics for the listed test conditions, unless otherwise noted. Product performance may not be indicated by the Electrical Characteristics if operated under different conditions.

2. Data labelled “Typ” is not to be used for design purposes but is intended as an indication of the IC’s potential performance.
3. The formulas given are for the typical characteristics only at 25 °C.
4. To calculate total supply current at loads other than 50 pF:

$$I_T(C_L) = I_T(50\ pF) + (C_L - 50)\ Vfk$$

where: I_T is in μA (per package), C_L in pF, V = (V_{DD} – V_{SS}) in volts, f in kHz is input frequency, and k = 0.001.

Share Feedback
Your Opinion Matters

Downloaded from Arrow.com.

SWITCHING CHARACTERISTICS (Note 5) (C_L = 50 pF, T_A = 25 °C)

Characteristic	Symbol	V_{DD}	All Types			Unit
			Min	Typ (Note 6)	Max	
Output Rise and Fall Time	t_{TLH}, t_{THL}					ns
t_{TLH}, t_{THL} = (1.5 ns/pF) C_L + 25 ns		5.0	–	100	200	
t_{TLH}, t_{THL} = (0.75 ns/pF) C_L + 12.5 ns		10	–	50	100	
t_{TLH}, t_{THL} = (0.55 ns/pF) C_L + 9.5 ns		15	–	40	80	
Propagation Delay Time	t_{PLH}, t_{PHL}					ns
Clk to Q						
t_{PLH}, t_{PHL} = (1.7 ns/pF) C_L + 230 ns		5.0	–	200	400	
t_{PLH}, t_{PHL} = (0.66 ns/pF) C_L + 97 ns		10	–	100	200	
t_{PLH}, t_{PHL} = (0.5 ns/pF) C_L + 75 ns		15	–	90	180	
Clk to $\overline{C_{out}}$	t_{PLH}, t_{PHL}					ns
t_{PLH}, t_{PHL} = (1.7 ns/pF) C_L + 230 ns		5.0	–	250	500	
t_{PLH}, t_{PHL} = (0.66 ns/pF) C_L + 97 ns		10	–	130	260	
t_{PLH}, t_{PHL} = (0.5 ns/pF) C_L + 75 ns		15	–	85	190	
$\overline{C_{in}}$ to $\overline{C_{out}}$	t_{PLH}, t_{PHL}					ns
t_{PLH}, t_{PHL} = (1.7 ns/pF) C_L + 95 ns		5.0	–	175	360	
t_{PLH}, t_{PHL} = (0.66 ns/pF) C_L + 47 ns		10	–	50	120	
t_{PLH}, t_{PHL} = (0.5 ns/pF) C_L + 35 ns		15	–	50	100	
PE to Q	t_{PLH}, t_{PHL}					ns
t_{PLH}, t_{PHL} = (1.7 ns/pF) C_L + 230 ns		5.0	–	235	470	
t_{PLH}, t_{PHL} = (0.66 ns/pF) C_L + 97 ns		10	–	100	200	
t_{PLH}, t_{PHL} = (0.5 ns/pF) C_L + 75 ns		15	–	80	160	
PE to $\overline{C_{out}}$	t_{PLH}, t_{PHL}					ns
t_{PLH}, t_{PHL} = (1. 7 ns/pF) C_L + 465 ns		5.0	–	320	640	
t_{PLH}, t_{PHL} = (0.66 ns/pF) C_L + 192 ns		10	–	145	290	
t_{PLH}, t_{PHL} = (0.5 ns/pF) C_L + 125 ns		15	–	105	210	
Clock Pulse Width	$t_{W(cl)}$	5.0	180	90	–	ns
		10	80	40	–	
		15	60	30	–	
Clock Pulse Frequency	f_{cl}	5.0	–	4.0	2.0	MHz
		10	–	8.0	4.0	
		15	–	10	5.0	
Preset Removal Time The Preset Signal must be low prior to a positive-going transition of the clock.	t_{rem}	5.0	160	80	–	ns
		10	80	40	–	
		15	60	30	–	
Clock Rise and Fall Time	$t_{r(cl)}$ $t_{f(cl)}$	5.0	–	–	15	µs
		10	–	–	5	
		1 5	–	–	4	
$\overline{Carry}$ In Setup Time	t_{su}	5.0	150	75	–	ns
		10	60	30	–	
		15	40	20	–	
Up/Down Setup Time		5.0	340	170	–	ns
		10	140	70	–	
		15	100	50	–	
Binary/Decade Setup Time		5.0	320	160	–	ns
		10	140	70	–	
		15	100	50	–	
Preset Enable Pulse Width	t_W	5.0	130	65	–	ns
		10	70	35	–	
		15	50	25	–	

5. The formulas given are for the typical characteristics only at 25 °C.
6. Data labelled “Typ” is not to be used for design purposes but is intended as an indication of the IC’s potential performance.

Share Feedback
Your Opinion Matters

Downloaded from Arrow.com.

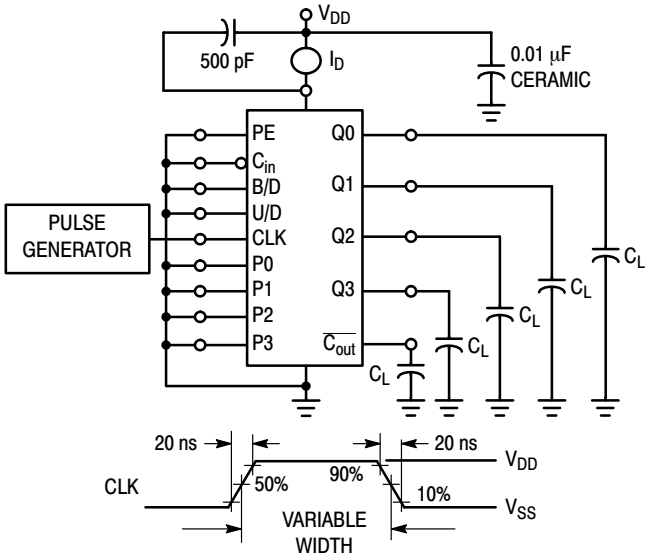

Figure 1. Power Dissipation Test Circuit and Waveform

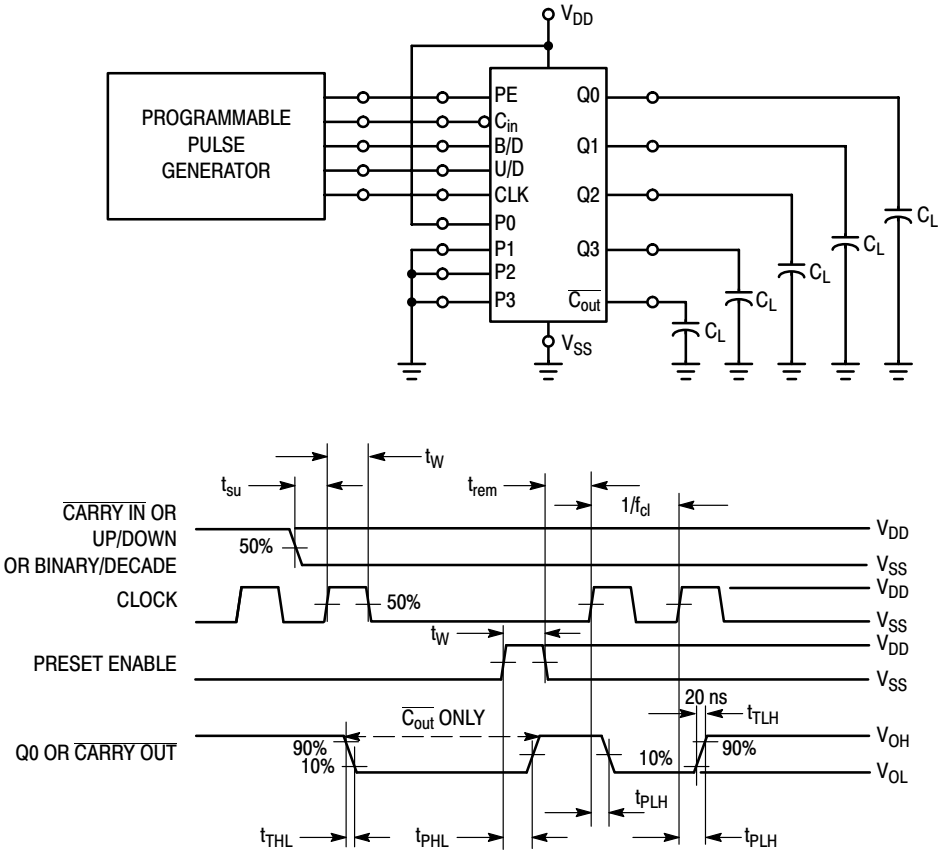

Figure 2. Switching Time Test Circuit and Waveforms

Share Feedback
Your Opinion Matters

Downloaded from Arrow.com.

TIMING DIAGRAM

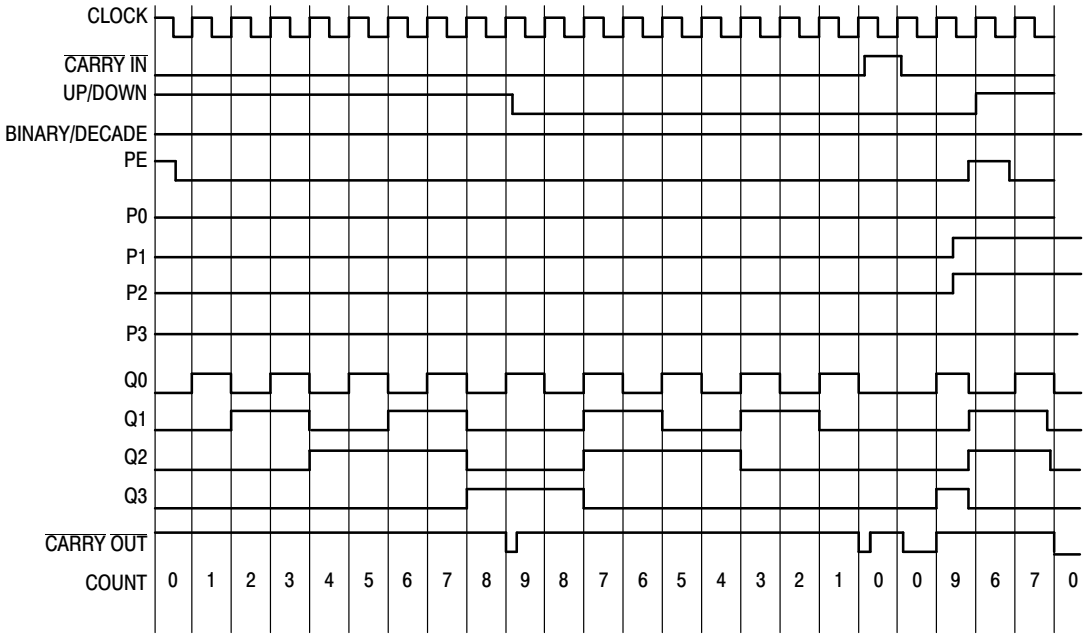

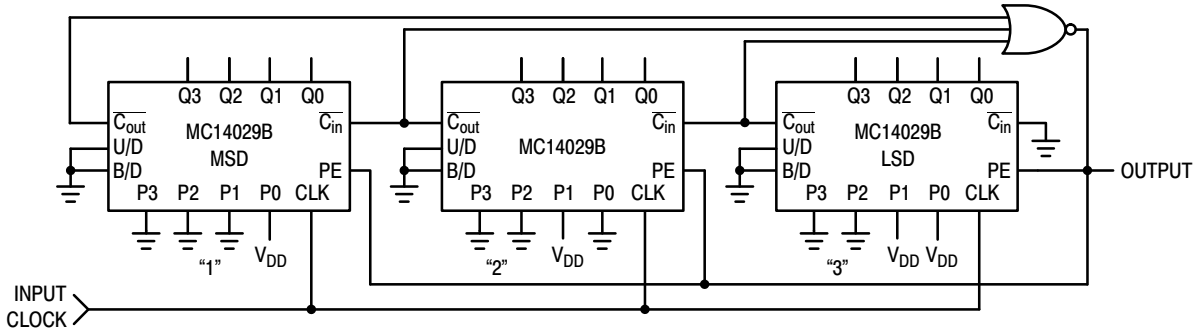

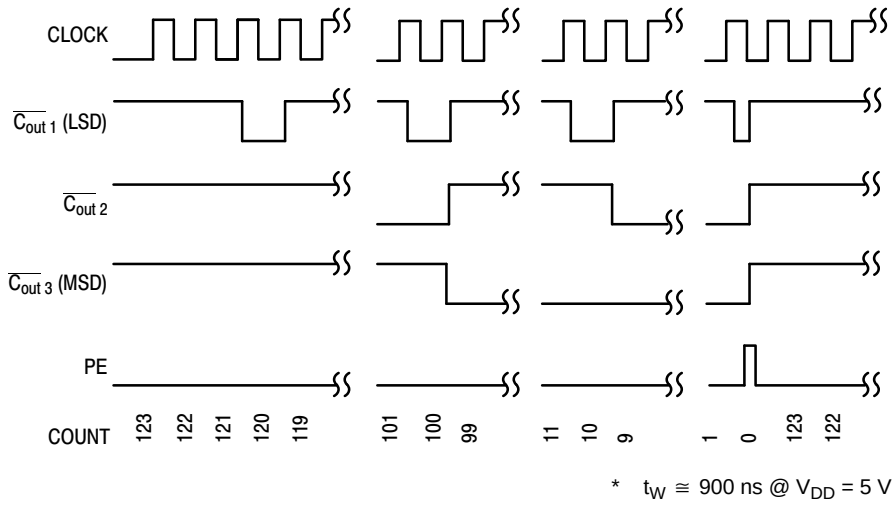

Figure 3. Divide by N BCD Down Counter and Timing Diagram (Shown for N = 123)

Share Feedback
Your Opinion Matters

Downloaded from Arrow.com.

LOGIC DIAGRAM

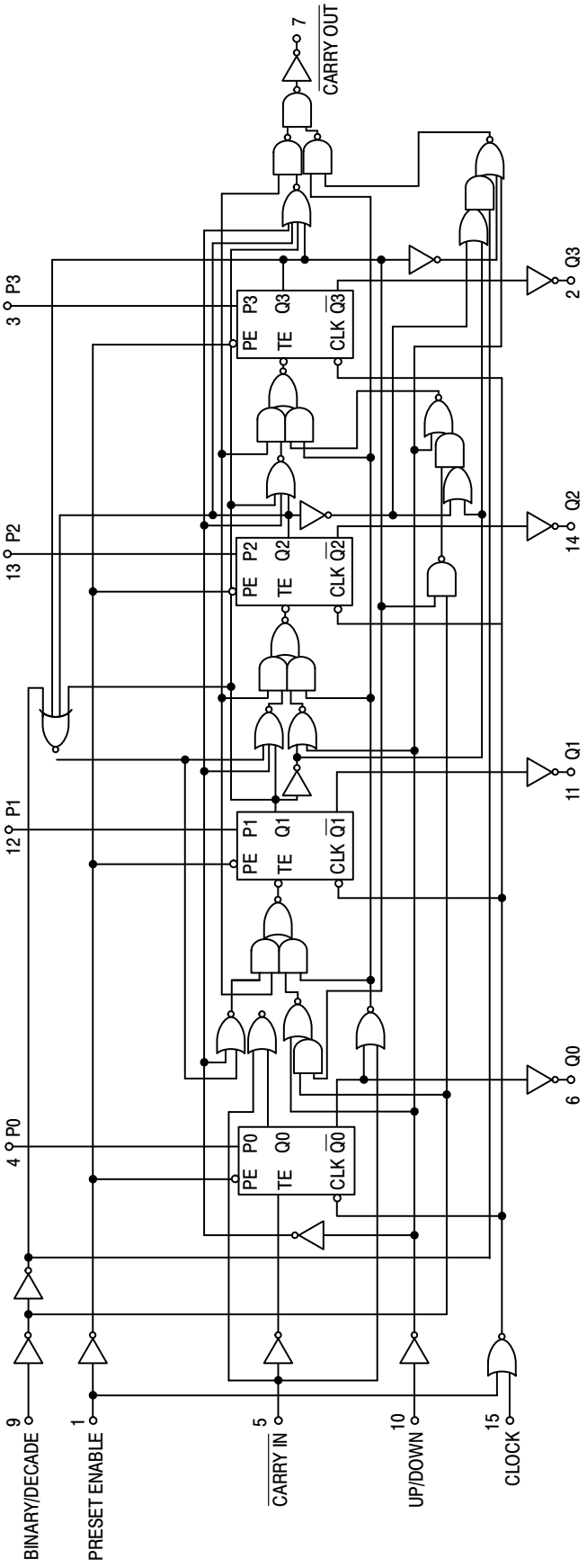

Share Feedback
Your Opinion Matters

Downloaded from Arrow.com.

REVISION HISTORY

Revision	Description of Changes	Date
12	Rebranded the Data Sheet to **onsemi** format.	8/26/2025

This document has undergone updates prior to the inclusion of this revision history table. The changes tracked here only reflect updates made on the noted approval dates.

Share Feedback
Your Opinion Matters

Downloaded from Arrow.com.

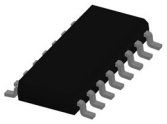

SOIC−16 9.90x3.90x1.37 1.27P
CASE 751B
ISSUE M

DATE 18 OCT 2024

NOTES:
1. DIMENSIONING AND TOLERANCING PER ASME Y14.5M, 2018.
2. DIMENSION IN MILLIMETERS. ANGLE IN DEGREES.
3. DIMENSIONS D AND E1 DO NOT INCLUDE MOLD PROTRUSION.
4. MAXIMUM MOLD PROTRUSION 0.15mm PER SIDE.
5. DIMENSION b DOES NOT INCLUDE DAMBAR PROTRUSION. ALLOWABLE DAMBAR PROTRUSION SHALL BE 0.127mm TOTAL IN EXCESS OF THE b DIMENSION AT MAXIMUM MATERIAL CONDITION.

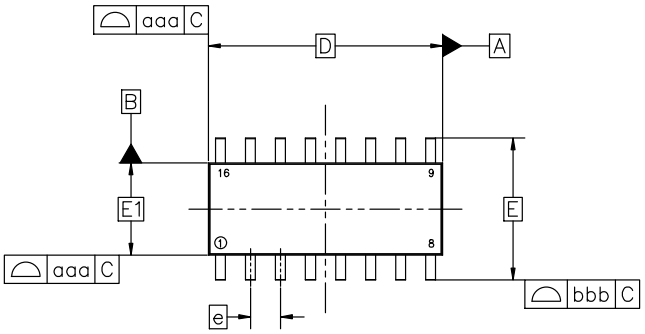

TOP VIEW

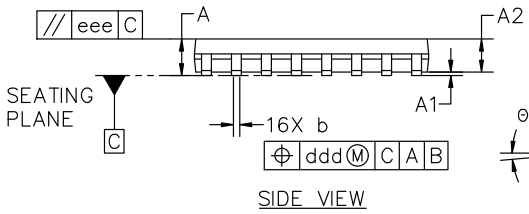

SIDE VIEW

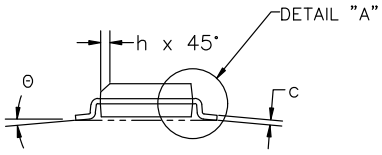

END VIEW

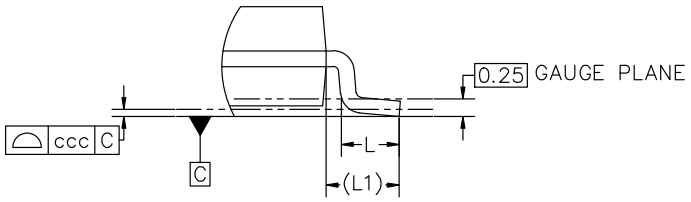

DETAIL "A"
Scale 3:1

MILLIMETERS			
DIM	MIN	NOM	MAX
A	1.35	1.55	1.75
A1	0.10	0.18	0.25
A2	1.25	1.37	1.50
b	0.35	0.42	0.49
c	0.19	0.22	0.25
D	9.90 BSC		
E	6.00 BSC		
E1	3.90 BSC		
e	1.27 BSC		
h	0.25	−−−	0.50
L	0.40	0.83	1.25
L1	1.05 REF		
Θ	0°	−−−	7°
TOLERANCE OF FORM AND POSITION			
aaa	0.10		
bbb	0.20		
ccc	0.10		
ddd	0.25		
eee	0.10		

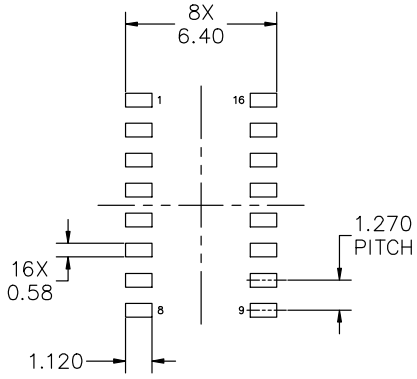

RECOMMENDED MOUNTING FOOTPRINT

*FOR ADDITIONAL INFORMATION ON OUR PB−FREE STRATEGY AND SOLDERING DETAILS, PLEASE DOWNLOAD THE onsemi SOLDERING AND MOUNTING TECHNIQUES REFERENCE MANUAL, SOLDERRM/D

DOCUMENT NUMBER:	**98ASB42566B**	Electronic versions are uncontrolled except when accessed directly from the Document Repository. Printed versions are uncontrolled except when stamped "CONTROLLED COPY" in red.	
DESCRIPTION:	**SOIC−16 9.90X3.90X1.37 1.27P**		**PAGE 1 OF 2**

onsemi and onsemi are trademarks of Semiconductor Components Industries, LLC dba **onsemi** or its subsidiaries in the United States and/or other countries. **onsemi** reserves the right to make changes without further notice to any products herein. **onsemi** makes no warranty, representation or guarantee regarding the suitability of its products for any particular purpose, nor does **onsemi** assume any liability arising out of the application or use of any product or circuit, and specifically disclaims any and all liability, including without limitation special, consequential or incidental damages. **onsemi** does not convey any license under its patent rights nor the rights of others.

© Semiconductor Components Industries, LLC, 2019

Downloaded from Arrow.com.

SOIC−16 9.90x3.90x1.37 1.27P
CASE 751B
ISSUE M

DATE 18 OCT 2024

GENERIC MARKING DIAGRAM*

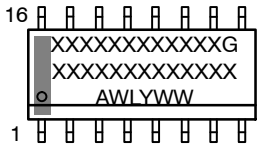

XXXXX = Specific Device Code
A = Assembly Location
WL = Wafer Lot
Y = Year
WW = Work Week
G = Pb−Free Package

*This information is generic. Please refer to device data sheet for actual part marking. Pb−Free indicator, “G” or microdot “▪”, may or may not be present. Some products may not follow the Generic Marking.

STYLE 1:

PIN 1.	COLLECTOR
2.	BASE
3.	EMITTER
4.	NO CONNECTION
5.	EMITTER
6.	BASE
7.	COLLECTOR
8.	COLLECTOR
9.	BASE
10.	EMITTER
11.	NO CONNECTION
12.	EMITTER
13.	BASE
14.	COLLECTOR
15.	EMITTER
16.	COLLECTOR

STYLE 2:

PIN 1.	CATHODE
2.	ANODE
3.	NO CONNECTION
4.	CATHODE
5.	CATHODE
6.	NO CONNECTION
7.	ANODE
8.	CATHODE
9.	CATHODE
10.	ANODE
11.	NO CONNECTION
12.	CATHODE
13.	CATHODE
14.	NO CONNECTION
15.	ANODE
16.	CATHODE

STYLE 3:

PIN 1.	COLLECTOR, DYE #1
2.	BASE, #1
3.	EMITTER, #1
4.	COLLECTOR, #1
5.	COLLECTOR, #2
6.	BASE, #2
7.	EMITTER, #2
8.	COLLECTOR, #2
9.	COLLECTOR, #3
10.	BASE, #3
11.	EMITTER, #3
12.	COLLECTOR, #3
13.	COLLECTOR, #4
14.	BASE, #4
15.	EMITTER, #4
16.	COLLECTOR, #4

STYLE 4:

PIN 1.	COLLECTOR, DYE #1
2.	COLLECTOR, #1
3.	COLLECTOR, #2
4.	COLLECTOR, #2
5.	COLLECTOR, #3
6.	COLLECTOR, #3
7.	COLLECTOR, #4
8.	COLLECTOR, #4
9.	BASE, #4
10.	EMITTER, #4
11.	BASE, #3
12.	EMITTER, #3
13.	BASE, #2
14.	EMITTER, #2
15.	BASE, #1
16.	EMITTER, #1

STYLE 5:

PIN 1.	DRAIN, DYE #1
2.	DRAIN, #1
3.	DRAIN, #2
4.	DRAIN, #2
5.	DRAIN, #3
6.	DRAIN, #3
7.	DRAIN, #4
8.	DRAIN, #4
9.	GATE, #4
10.	SOURCE, #4
11.	GATE, #3
12.	SOURCE, #3
13.	GATE, #2
14.	SOURCE, #2
15.	GATE, #1
16.	SOURCE, #1

STYLE 6:

PIN 1.	CATHODE
2.	CATHODE
3.	CATHODE
4.	CATHODE
5.	CATHODE
6.	CATHODE
7.	CATHODE
8.	CATHODE
9.	ANODE
10.	ANODE
11.	ANODE
12.	ANODE
13.	ANODE
14.	ANODE
15.	ANODE
16.	ANODE

STYLE 7:

PIN 1.	SOURCE N-CH
2.	COMMON DRAIN (OUTPUT)
3.	COMMON DRAIN (OUTPUT)
4.	GATE P-CH
5.	COMMON DRAIN (OUTPUT)
6.	COMMON DRAIN (OUTPUT)
7.	COMMON DRAIN (OUTPUT)
8.	SOURCE P-CH
9.	SOURCE P-CH
10.	COMMON DRAIN (OUTPUT)
11.	COMMON DRAIN (OUTPUT)
12.	COMMON DRAIN (OUTPUT)
13.	GATE N-CH
14.	COMMON DRAIN (OUTPUT)
15.	COMMON DRAIN (OUTPUT)
16.	SOURCE N-CH

onsemi and ONSEMI are trademarks of Semiconductor Components Industries, LLC dba **onsemi** or its subsidiaries in the United States and/or other countries. **onsemi** reserves the right to make changes without further notice to any products herein. **onsemi** makes no warranty, representation or guarantee regarding the suitability of its products for any particular purpose, nor does **onsemi** assume any liability arising out of the application or use of any product or circuit, and specifically disclaims any and all liability, including without limitation special, consequential or incidental damages. **onsemi** does not convey any license under its patent rights nor the rights of others.

© Semiconductor Components Industries, LLC, 2019

Downloaded from Arrow.com.

onsemi, ONSEMI , and other names, marks, and brands are registered and/or common law trademarks of Semiconductor Components Industries, LLC dba "**onsemi**" or its affiliates and/or subsidiaries in the United States and/or other countries. **onsemi** owns the rights to a number of patents, trademarks, copyrights, trade secrets, and other intellectual property. A listing of **onsemi**'s product/patent coverage may be accessed at www.onsemi.com/site/pdf/Patent−Marking.pdf. **onsemi** reserves the right to make changes at any time to any products or information herein, without notice. The information herein is provided "as−is" and **onsemi** makes no warranty, representation or guarantee regarding the accuracy of the information, product features, availability, functionality, or suitability of its products for any particular purpose, nor does **onsemi** assume any liability arising out of the application or use of any product or circuit, and specifically disclaims any and all liability, including without limitation special, consequential or incidental damages. Buyer is responsible for its products and applications using **onsemi** products, including compliance with all laws, regulations and safety requirements or standards, regardless of any support or applications information provided by **onsemi**. "Typical" parameters which may be provided in **onsemi** data sheets and/or specifications can and do vary in different applications and actual performance may vary over time. All operating parameters, including "Typicals" must be validated for each customer application by customer's technical experts. **onsemi** does not convey any license under any of its intellectual property rights nor the rights of others. **onsemi** products are not designed, intended, or authorized for use as a critical component in life support systems or any FDA Class 3 medical devices or medical devices with a same or similar classification in a foreign jurisdiction or any devices intended for implantation in the human body. Should Buyer purchase or use **onsemi** products for any such unintended or unauthorized application, Buyer shall indemnify and hold **onsemi** and its officers, employees, subsidiaries, affiliates, and distributors harmless against all claims, costs, damages, and expenses, and reasonable attorney fees arising out of, directly or indirectly, any claim of personal injury or death associated with such unintended or unauthorized use, even if such claim alleges that **onsemi** was negligent regarding the design or manufacture of the part. **onsemi** is an Equal Opportunity/Affirmative Action Employer. This literature is subject to all applicable copyright laws and is not for resale in any manner.

ADDITIONAL INFORMATION

TECHNICAL PUBLICATIONS:
Technical Library: www.onsemi.com/design/resources/technical−documentation
onsemi Website: www.onsemi.com

ONLINE SUPPORT: www.onsemi.com/support
For additional information, please contact your local Sales Representative at www.onsemi.com/support/sales

◊

Downloaded from Arrow.com.