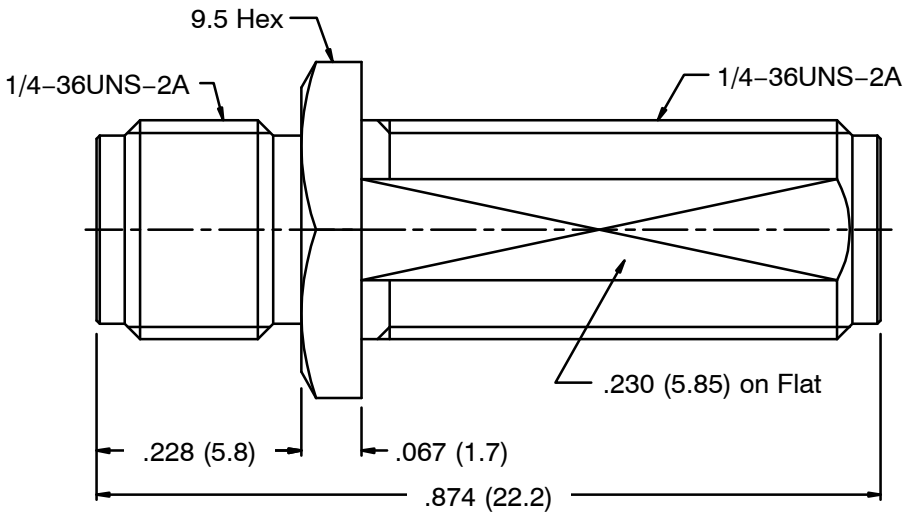

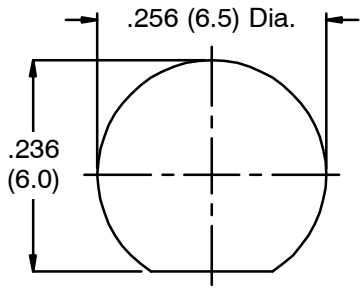

Recommended
Mounting Hole

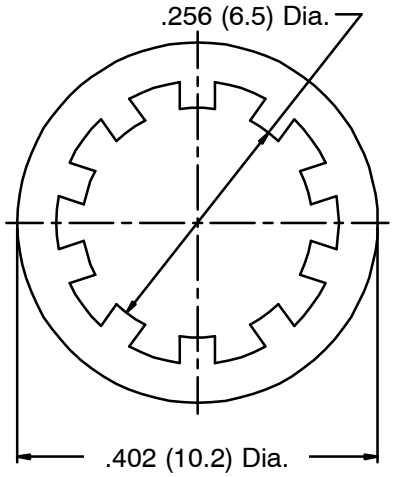

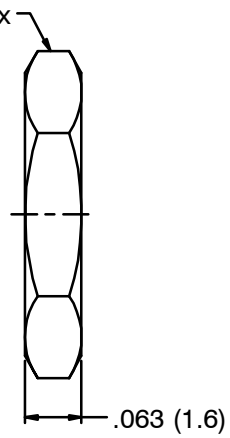

NOTES: Finish (Plating Thickness in Micro–inches)
1. Brass
2. Thin Gold over Nickel Pl. 50 Min. Thick over Copper Pl. 50 Min, Thick
3. Beryllium Copper
4. Gold Pl. 3 Min Thick over Nickel Pl. 50 Min. Thick over Copper Pl. 50 Min. Thick
5. Teflon

RoHS Compliant

Remark:
1. Max. Panel Thickness = .256 (6.5)

No	Description	Material	Finish	Q'ty	Drawing No.
5	Hex Nut	Note 1	Note 2	1	
4	Lock Washer	Note 1	Note 2	1	
3	Contact Pin	Note 3	Note 4	1	
2	Insulator	Note 5	Natural	2	
1	Body	Note 1	Note 2	1	

Dimensions are in Inches
Unless Otherwise Specified Tolerances
0.5–6 = ±0.2
6–30 = ±0.4
30–120 = ±0.6
120–315 = ±1
315–1000 = ±1.6
1000–2000 = ±2.4

Scale 5/1 | Issue A

Part No.

Approved | Date 7–10–2015
Checked | Date 7–10–2015
Drawn | Date 7–10–2015

NTE Electronics

Title: SMA Bulkhead Jack to Jack Adapter

Drawing No. 06–S007

File No.

Downloaded from Arrow.com.