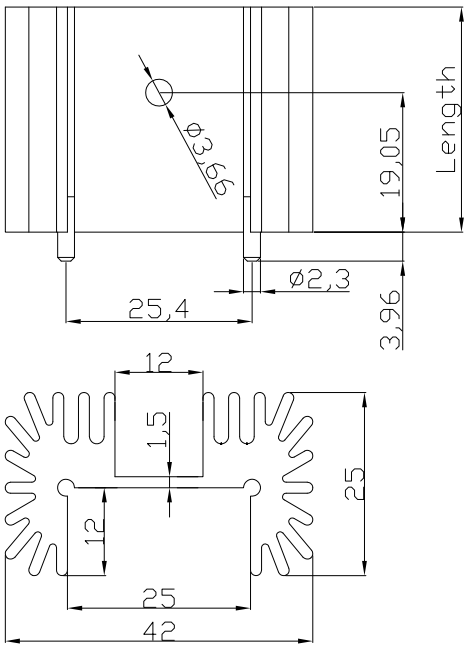

Note:
Material: AL6063-T5;
④ Pin: 1010A, Tin plated 120~200u".

WSW order code V9733xx-LP

Surface finish option	Length option
E: Black anodized	1: 25.4mm
① A: AL degreased	2: 38.1mm
	3: 50.8mm
	4: 63.5mm
	① 5: 28.9mm

RoHS compliant
Unit:mm

Scale	Free
TOLERANCE	
UNIT	±0.25
DIM	TOL
Angle	TOL

Id.	Modification	Date	Name		Date	Name
④	Add the Pin information	12.08.2020	Segal	Drawn	08.07.2016	Amy
③	Update thermal graph	23.03.2020	Segal	Approved	12.08.2020	Segal
②	Add thermal graph	18.01.2020	Segal			
①	Add new P/N versions	12.11.2018	Amy			
⓪	Drawn	08.07.2016	Amy			

ASSMANN WSW components

Description: Extrusion heat sink with solder pin 42 x 25 mm

ASSMANN WSW-No. V9733xx-LP

Drawing-No. ASS 4320 HS rev04

Customer-No.

SHEET 1 / 5

KT2164
HSK0190

Downloaded from Arrow.com.

③②

V9733E1-LP (25.4mm)

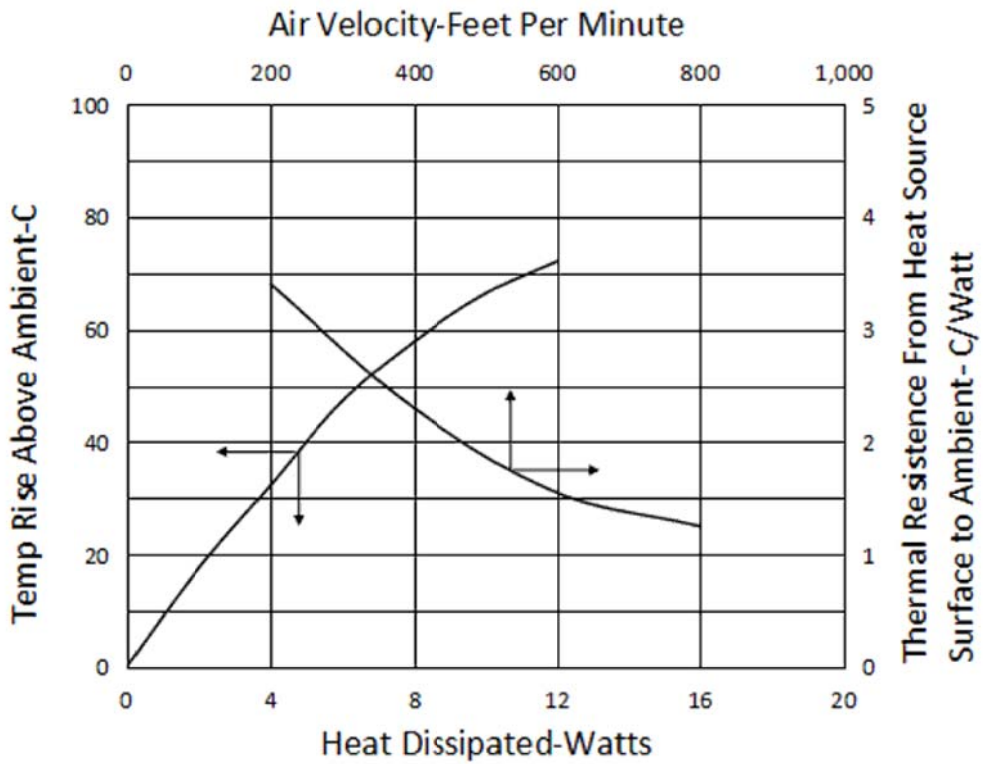

RoHS compliant

Unit:mm

Scale	Free
TOLERANCE	
UNIT	±0.25
DIM	TOL
Angle	TOL

Id.	Modification	Date	Name		Date	Name
④	Add the Pin information	12.08.2020	Segal	Drawn	08.07.2016	Amy
③	Update thermal graph	23.03.2020	Segal	Approved	12.08.2020	Segal
②	Add thermal graph	18.01.2020	Segal			
①	Add new P/N versions	12.11.2018	Amy			
⓪	Drawn	08.07.2016	Amy			

ASSMANN WSW components

Description: Extrusion heat sink with solder pin 42 x 25 mm

ASSMANN WSW-No. V9733xx-LP

Drawing-No. ASS 4320 HS

rev04

Customer-No.

SHEET 2 / 5

KT2164
HSK0190

Downloaded from Arrow.com.

③②

V9733E2-LP (38.1mm)

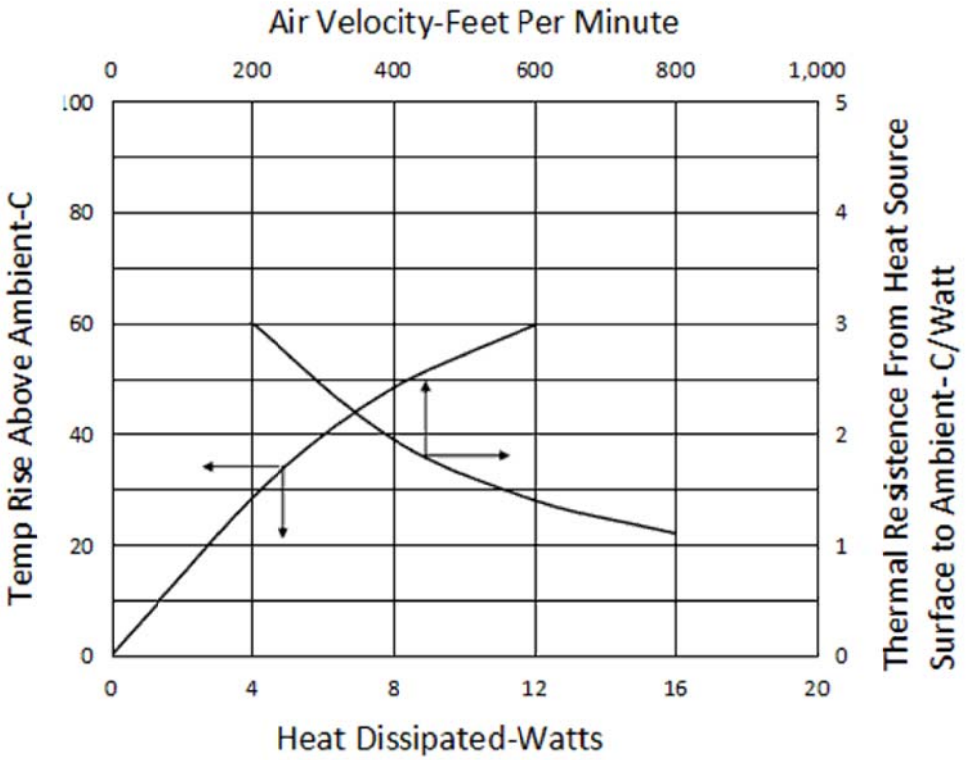

RoHS compliant

Unit:mm

Scale	Free
TOLERANCE	
UNIT	±0.25
DIM	TOL
Angle	TOL

Id.	Modification	Date	Name		Date	Name
④	Add the Pin information	12.08.2020	Segal	Drawn	08.07.2016	Amy
③	Update thermal graph	23.03.2020	Segal	Approved	12.08.2020	Segal
②	Add thermal graph	18.01.2020	Segal			
①	Add new P/N versions	12.11.2018	Amy			
⓪	Drawn	08.07.2016	Amy			

ASSMANN WSW components

Description: Extrusion heat sink with solder pin 42 x 25 mm

ASSMANN WSW-No. V9733xx-LP

Drawing-No. ASS 4320 HS

rev04

Customer-No.

SHEET 3 / 5

KT2164
HSK0190

Downloaded from Arrow.com.

③②

V9733E3-LP (50.8mm)

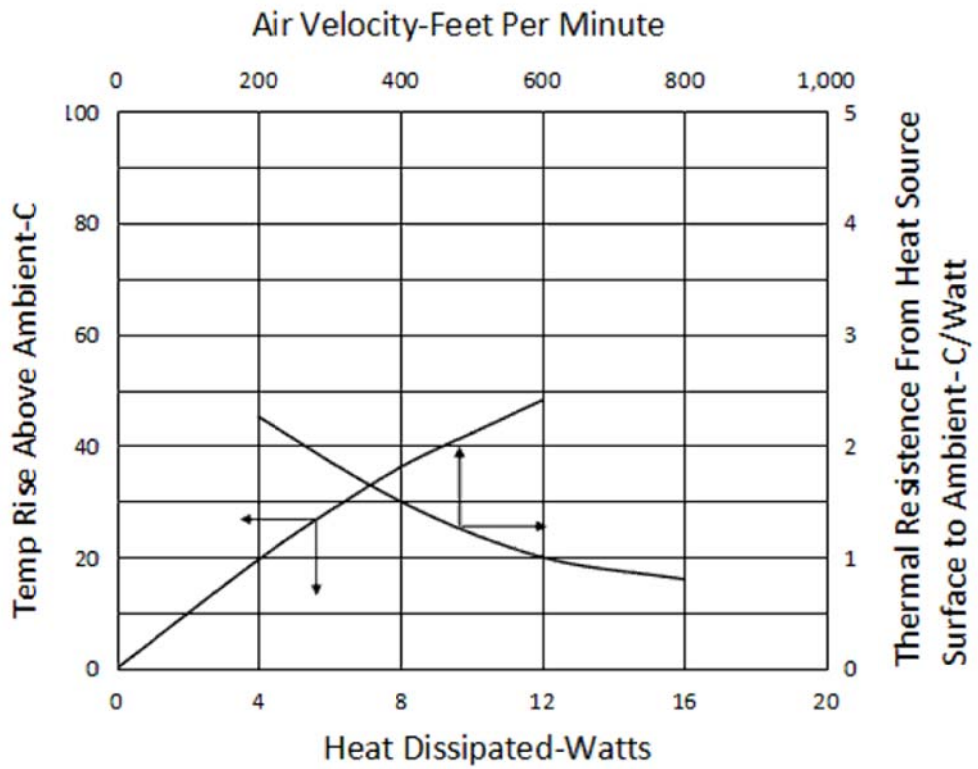

RoHS compliant

Unit:mm

Scale	Free
TOLERANCE	
UNIT	±0.25
DIM	TOL
Angle	TOL

Id.	Modification	Date	Name		Date	Name
④	Add the Pin information	12.08.2020	Segal	Drawn	08.07.2016	Amy
③	Update thermal graph	23.03.2020	Segal	Approved	12.08.2020	Segal
②	Add thermal graph	18.01.2020	Segal			
①	Add new P/N versions	12.11.2018	Amy			
⓪	Drawn	08.07.2016	Amy			

ASSMANN WSW components

Description: Extrusion heat sink with solder pin 42 x 25 mm

ASSMANN WSW-No. V9733xx-LP

Drawing-No. ASS 4320 HS

rev04

Customer-No.

SHEET 4 / 5

KT2164
HSK0190

Downloaded from Arrow.com.

③②

V9733E4-LP (63.5mm)

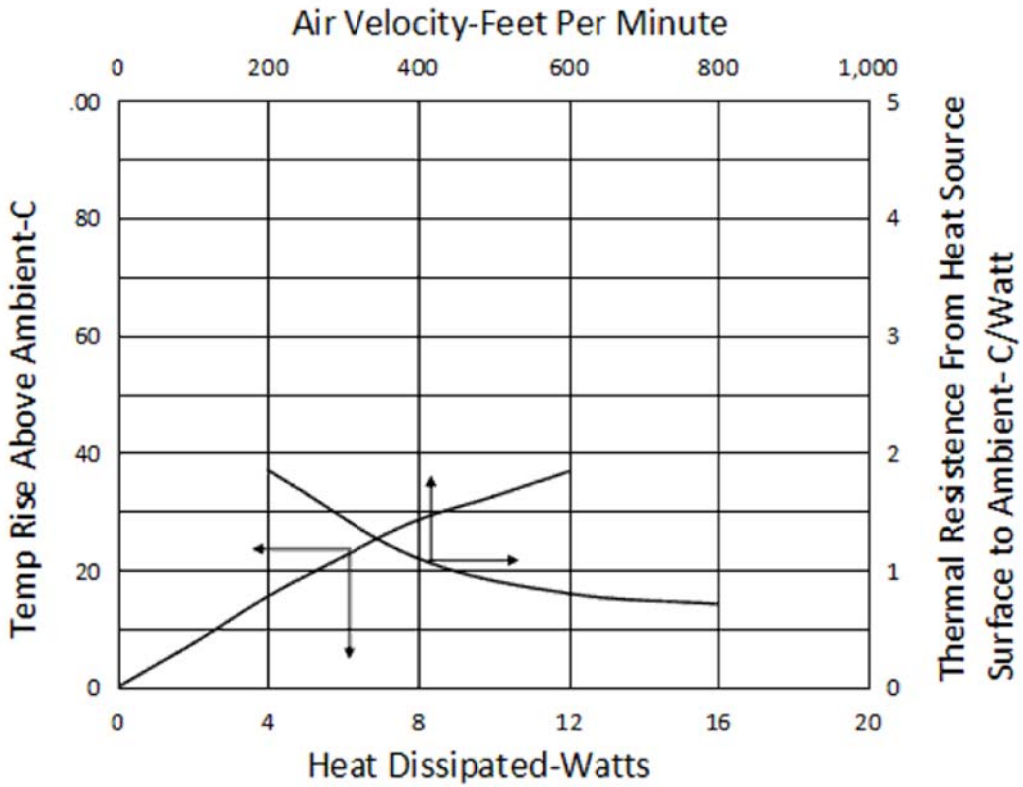

RoHS compliant

Unit:mm

Scale	Free
TOLERANCE	
UNIT	±0.25
DIM	TOL
Angle	TOL

Id.	Modification	Date	Name		Date	Name
④	Add the Pin information	12.08.2020	Segal	Drawn	08.07.2016	Amy
③	Update thermal graph	23.03.2020	Segal	Approved	12.08.2020	Segal
②	Add thermal graph	18.01.2020	Segal			
①	Add new P/N versions	12.11.2018	Amy			
⓪	Drawn	08.07.2016	Amy			

ASSMANN WSW components

Description: Extrusion heat sink with solder pin 42 x 25 mm

ASSMANN WSW-No. V9733xx-LP

Drawing-No. ASS 4320 HS

rev04

Customer-No.

SHEET 5 / 5

KT2164
HSK0190

Downloaded from Arrow.com.