User's Manual

RA8E1 Group

Fast Prototyping Board for RA8E1 Microcontroller Group
FPB-RA8E1 v1
User's Manual

Renesas RA Family
RA8 Series

All information contained in these materials, including products and product specifications, represents information on the product at the time of publication and is subject to change by Renesas Electronics Corp. without notice. Please review the latest information published by Renesas Electronics Corp. through various means, including the Renesas Electronics Corp. website (https://www.renesas.com).

Renesas Electronics
www.renesas.com

Rev. 1.00 Oct 2024

Downloaded from Arrow.com.

Notice

1. Descriptions of circuits, software and other related information in this document are provided only to illustrate the operation of semiconductor products and application examples. You are fully responsible for the incorporation or any other use of the circuits, software, and information in the design of your product or system. Renesas Electronics disclaims any and all liability for any losses and damages incurred by you or third parties arising from the use of these circuits, software, or information.
2. Renesas Electronics hereby expressly disclaims any warranties against and liability for infringement or any other claims involving patents, copyrights, or other intellectual property rights of third parties, by or arising from the use of Renesas Electronics products or technical information described in this document, including but not limited to, the product data, drawings, charts, programs, algorithms, and application examples.
3. No license, express, implied or otherwise, is granted hereby under any patents, copyrights or other intellectual property rights of Renesas Electronics or others.
4. You shall be responsible for determining what licenses are required from any third parties, and obtaining such licenses for the lawful import, export, manufacture, sales, utilization, distribution or other disposal of any products incorporating Renesas Electronics products, if required.
5. You shall not alter, modify, copy, or reverse engineer any Renesas Electronics product, whether in whole or in part. Renesas Electronics disclaims any and all liability for any losses or damages incurred by you or third parties arising from such alteration, modification, copying or reverse engineering.
6. Renesas Electronics products are classified according to the following two quality grades: “Standard” and “High Quality”. The intended applications for each Renesas Electronics product depends on the product’s quality grade, as indicated below.
   "Standard": Computers; office equipment; communications equipment; test and measurement equipment; audio and visual equipment; home electronic appliances; machine tools; personal electronic equipment; industrial robots; etc.
   "High Quality": Transportation equipment (automobiles, trains, ships, etc.); traffic control (traffic lights); large-scale communication equipment; key financial terminal systems; safety control equipment; etc.
   Unless expressly designated as a high reliability product or a product for harsh environments in a Renesas Electronics data sheet or other Renesas Electronics document, Renesas Electronics products are not intended or authorized for use in products or systems that may pose a direct threat to human life or bodily injury (artificial life support devices or systems; surgical implantations; etc.), or may cause serious property damage (space system; undersea repeaters; nuclear power control systems; aircraft control systems; key plant systems; military equipment; etc.). Renesas Electronics disclaims any and all liability for any damages or losses incurred by you or any third parties arising from the use of any Renesas Electronics product that is inconsistent with any Renesas Electronics data sheet, user’s manual or other Renesas Electronics document.
7. No semiconductor product is absolutely secure. Notwithstanding any security measures or features that may be implemented in Renesas Electronics hardware or software products, Renesas Electronics shall have absolutely no liability arising out of any vulnerability or security breach, including but not limited to any unauthorized access to or use of a Renesas Electronics product or a system that uses a Renesas Electronics product. RENESAS ELECTRONICS DOES NOT WARRANT OR GUARANTEE THAT RENESAS ELECTRONICS PRODUCTS, OR ANY SYSTEMS CREATED USING RENESAS ELECTRONICS PRODUCTS WILL BE INVULNERABLE OR FREE FROM CORRUPTION, ATTACK, VIRUSES, INTERFERENCE, HACKING, DATA LOSS OR THEFT, OR OTHER SECURITY INTRUSION (“Vulnerability Issues”). RENESAS ELECTRONICS DISCLAIMS ANY AND ALL RESPONSIBILITY OR LIABILITY ARISING FROM OR RELATED TO ANY VULNERABILITY ISSUES. FURTHERMORE, TO THE EXTENT PERMITTED BY APPLICABLE LAW, RENESAS ELECTRONICS DISCLAIMS ANY AND ALL WARRANTIES, EXPRESS OR IMPLIED, WITH RESPECT TO THIS DOCUMENT AND ANY RELATED OR ACCOMPANYING SOFTWARE OR HARDWARE, INCLUDING BUT NOT LIMITED TO THE IMPLIED WARRANTIES OF MERCHANTABILITY, OR FITNESS FOR A PARTICULAR PURPOSE.
8. When using Renesas Electronics products, refer to the latest product information (data sheets, user’s manuals, application notes, “General Notes for Handling and Using Semiconductor Devices” in the reliability handbook, etc.), and ensure that usage conditions are within the ranges specified by Renesas Electronics with respect to maximum ratings, operating power supply voltage range, heat dissipation characteristics, installation, etc. Renesas Electronics disclaims any and all liability for any malfunctions, failure or accident arising out of the use of Renesas Electronics products outside of such specified ranges.
9. Although Renesas Electronics endeavors to improve the quality and reliability of Renesas Electronics products, semiconductor products have specific characteristics, such as the occurrence of failure at a certain rate and malfunctions under certain use conditions. Unless designated as a high reliability product or a product for harsh environments in a Renesas Electronics data sheet or other Renesas Electronics document, Renesas Electronics products are not subject to radiation resistance design. You are responsible for implementing safety measures to guard against the possibility of bodily injury, injury or damage caused by fire, and/or danger to the public in the event of a failure or malfunction of Renesas Electronics products, such as safety design for hardware and software, including but not limited to redundancy, fire control and malfunction prevention, appropriate treatment for aging degradation or any other appropriate measures. Because the evaluation of microcomputer software alone is very difficult and impractical, you are responsible for evaluating the safety of the final products or systems manufactured by you.
10. Please contact a Renesas Electronics sales office for details as to environmental matters such as the environmental compatibility of each Renesas Electronics product. You are responsible for carefully and sufficiently investigating applicable laws and regulations that regulate the inclusion or use of controlled substances, including without limitation, the EU RoHS Directive, and using Renesas Electronics products in compliance with all these applicable laws and regulations. Renesas Electronics disclaims any and all liability for damages or losses occurring as a result of your noncompliance with applicable laws and regulations.
11. Renesas Electronics products and technologies shall not be used for or incorporated into any products or systems whose manufacture, use, or sale is prohibited under any applicable domestic or foreign laws or regulations. You shall comply with any applicable export control laws and regulations promulgated and administered by the governments of any countries asserting jurisdiction over the parties or transactions.
12. It is the responsibility of the buyer or distributor of Renesas Electronics products, or any other party who distributes, disposes of, or otherwise sells or transfers the product to a third party, to notify such third party in advance of the contents and conditions set forth in this document.
13. This document shall not be reprinted, reproduced or duplicated in any form, in whole or in part, without prior written consent of Renesas Electronics.
14. Please contact a Renesas Electronics sales office if you have any questions regarding the information contained in this document or Renesas Electronics products.

(Note1) “Renesas Electronics” as used in this document means Renesas Electronics Corporation and also includes its directly or indirectly controlled subsidiaries.
(Note2) “Renesas Electronics product(s)” means any product developed or manufactured by or for Renesas Electronics.

(Rev.5.0-1 October 2020)

Corporate Headquarters

TOYOSU FORESIA, 3-2-24 Toyosu,
Koto-ku, Tokyo 135-0061, Japan
www.renesas.com

Trademarks

Renesas and the Renesas logo are trademarks of Renesas Electronics Corporation. All trademarks and registered trademarks are the property of their respective owners.

Contact information

For further information on a product, technology, the most up-to-date version of a document, or your nearest sales office, please visit: www.renesas.com/contact/.

© 2024 Renesas Electronics Corporation. All rights reserved.

Downloaded from Arrow.com.

General Precautions in the Handling of Microprocessing Unit and Microcontroller Unit Products

The following usage notes are applicable to all Microprocessing unit and Microcontroller unit products from Renesas. For detailed usage notes on the products covered by this document, refer to the relevant sections of the document as well as any technical updates that have been issued for the products.

1. Precaution against Electrostatic Discharge (ESD)

   A strong electrical field, when exposed to a CMOS device, can cause destruction of the gate oxide and ultimately degrade the device operation. Steps must be taken to stop the generation of static electricity as much as possible, and quickly dissipate it when it occurs. Environmental control must be adequate. When it is dry, a humidifier should be used. This is recommended to avoid using insulators that can easily build up static electricity. Semiconductor devices must be stored and transported in an anti-static container, static shielding bag or conductive material. All test and measurement tools including work benches and floors must be grounded. The operator must also be grounded using a wrist strap. Semiconductor devices must not be touched with bare hands. Similar precautions must be taken for printed circuit boards with mounted semiconductor devices.
2. Processing at power-on

   The state of the product is undefined at the time when power is supplied. The states of internal circuits in the LSI are indeterminate and the states of register settings and pins are undefined at the time when power is supplied. In a finished product where the reset signal is applied to the external reset pin, the states of pins are not guaranteed from the time when power is supplied until the reset process is completed. In a similar way, the states of pins in a product that is reset by an on-chip power-on reset function are not guaranteed from the time when power is supplied until the power reaches the level at which resetting is specified.
3. Input of signal during power-off state

   Do not input signals or an I/O pull-up power supply while the device is powered off. The current injection that results from input of such a signal or I/O pull-up power supply may cause malfunction and the abnormal current that passes in the device at this time may cause degradation of internal elements. Follow the guideline for input signal during power-off state as described in your product documentation.
4. Handling of unused pins

   Handle unused pins in accordance with the directions given under handling of unused pins in the manual. The input pins of CMOS products are generally in the high-impedance state. In operation with an unused pin in the open-circuit state, extra electromagnetic noise is induced in the vicinity of the LSI, an associated shoot-through current flows internally, and malfunctions occur due to the false recognition of the pin state as an input signal become possible.
5. Clock signals

   After applying a reset, only release the reset line after the operating clock signal becomes stable. When switching the clock signal during program execution, wait until the target clock signal is stabilized. When the clock signal is generated with an external resonator or from an external oscillator during a reset, ensure that the reset line is only released after full stabilization of the clock signal. Additionally, when switching to a clock signal produced with an external resonator or by an external oscillator while program execution is in progress, wait until the target clock signal is stable.
6. Voltage application waveform at input pin

   Waveform distortion due to input noise or a reflected wave may cause malfunction. If the input of the CMOS device stays in the area between V_{IL} (Max.) and V_{IH} (Min.) due to noise, for example, the device may malfunction. Take care to prevent chattering noise from entering the device when the input level is fixed, and also in the transition period when the input level passes through the area between V_{IL} (Max.) and V_{IH} (Min.).
7. Prohibition of access to reserved addresses

   Access to reserved addresses is prohibited. The reserved addresses are provided for possible future expansion of functions. Do not access these addresses as the correct operation of the LSI is not guaranteed.
8. Differences between products

   Before changing from one product to another, for example to a product with a different part number, confirm that the change will not lead to problems. The characteristics of a microprocessing unit or microcontroller unit products in the same group but having a different part number might differ in terms of internal memory capacity, layout pattern, and other factors, which can affect the ranges of electrical characteristics, such as characteristic values, operating margins, immunity to noise, and amount of radiated noise. When changing to a product with a different part number, implement a system-evaluation test for the given product.

Downloaded from Arrow.com.

Renesas FPB-RA8E1 Disclaimer

By using this FPB-RA8E1, the User accepts the following terms, which are in addition to, and control in the event of disagreement, with Renesas' General Terms and Conditions available at renesas.com/legal-notices.

The FPB-RA8E1 is not guaranteed to be error free, and the entire risk as to the results and performance of the FPB-RA8E1 is assumed by the User. The FPB-RA8E1 is provided by Renesas on an "as is" basis without warranty of any kind whether express or implied, including but not limited to the implied warranties of good workmanship, fitness for a particular purpose, title, merchantability, and non-infringement of intellectual property rights. Renesas expressly disclaims any implied warranty.

Renesas does not consider the FPB-RA8E1 to be a finished product and therefore the FPB-RA8E1 may not comply with some requirements applicable to finished products, including, but not limited to recycling, restricted substances and electromagnetic compatibility regulations. Refer to Certifications section, for information about certifications and compliance information for the FPB-RA8E1. It is the kit User's responsibility to make sure the kit meets any local requirements applicable to their region.

Renesas or its affiliates shall in no event be liable for any loss of profit, loss of data, loss of contract, loss of business, damage to reputation or goodwill, any economic loss, any reprogramming or recall costs (whether the foregoing losses are direct or indirect) nor shall Renesas or its affiliates be liable for any other direct or indirect special, incidental or consequential damages arising out of or in relation to the use of this FPB-RA8E1, even if Renesas or its affiliates have been advised of the possibility of such damages.

Renesas has used reasonable care in preparing the information included in this document, but Renesas does not warrant that such information is error free nor does Renesas guarantee an exact match for every application or parameter to part numbers designated by other vendors listed herein. The information provided in this document is intended solely to enable the use of Renesas products. No express or implied license to any intellectual property right is granted by this document or in connection with the sale of Renesas products. Renesas reserves the right to make changes to specifications and product descriptions at any time without notice. Renesas assumes no liability for any damages incurred by you resulting from errors in or omissions from the information included herein. Renesas cannot verify, and assumes no liability for, the accuracy of information available on another company's website.

Precautions

This Fast Prototyping Board is only intended for use in a laboratory environment under ambient temperature and humidity conditions. A safe separation distance should be used between this and any sensitive equipment. Its use outside the laboratory, classroom, study area, or similar such area invalidates conformity with the protection requirements of the Electromagnetic Compatibility Directive and could lead to prosecution.

The product generates, uses, and can radiate radio frequency energy and may cause harmful interference to radio communications. There is no guarantee that interference will not occur in a particular installation. If this equipment causes harmful interference to radio or television reception, which can be determined by turning the equipment off or on, you are encouraged to try to correct the interference by one or more of the following measures:

• Ensure attached cables do not lie across the equipment.

• Reorient the receiving antenna.

• Increase the distance between the equipment and the receiver.

• Connect the equipment into an outlet on a circuit different from that which the receiver is connected.

• Power down the equipment when not in use.

• Consult the dealer or an experienced radio/TV technician for help.

Note: It is recommended that wherever possible shielded interface cables are used.

The product is potentially susceptible to certain EMC phenomena. To mitigate against them it is recommended that the following measures be undertaken:

• The user is advised that mobile phones should not be used within 10 m of the product when in use.

• The user is advised to take ESD precautions when handling the equipment.

The Evaluation Kit does not represent an ideal reference design for an end product and does not fulfil the regulatory standards for an end product.

Proprietary Notice

All text, graphics, photographs, trademarks, logos, artwork, and computer code, collectively known as content, contained in this document is owned, controlled, or licensed by or to Renesas, and is protected by trade dress, copyright, patent and trademark laws, and other intellectual property rights and unfair competition laws. Except as expressly provided herein, no part of this document or content may be copied, reproduced, republished, posted, publicly displayed, encoded, translated, transmitted, or distributed in any other medium for publication or distribution or for any commercial enterprise, without prior written consent from Renesas.

Arm® and Cortex® are registered trademarks of Arm Limited.

"Pmod™" is the trademark of Digilent Inc. The Pmod Interface Specification is the property of Digilent Inc. For more information on the use of the Pmod trademark, please see our Pmod License Agreement page.

Arduino® is a trademark of Arduino SA.

Other brands and names mentioned in this document may be the trademarks or registered trademarks of their respective holders.

Downloaded from Arrow.com.

Renesas RA Family

FPB-RA8E1 v1

Contents

Corporate Headquarters 2

Contact information 2

Trademarks 2

1. Board Overview 4
1.1 Assumptions and Advisory Notes 5

2. Box Contents 6

3. Ordering Information 6

4. Hardware Architecture and Default Configurations 7
4.1 Board Architecture 7
4.2 Block Diagram 7
4.3 Jumper Configurations 8
4.3.1 Copper Jumpers 8
4.3.2 Traditional Pin Header Jumpers 8
4.3.3 Default Jumper Configurations 9

5. System Control and Ecosystem Access 11
5.1 Power 11
5.1.1 Power Supply Options 11
5.1.2 Power Supply Considerations 12
5.1.3 Power-up Behavior 12
5.2 Debug and Trace 12
5.2.1 Debug On-Board 13
5.2.2 Debug In 14
5.2.3 Debugger configurations in e² studio 14
5.3 Ecosystem 15
5.3.1 Digilent Pmod™ Connectors 15
5.3.2 Arduino™ Connector 17
5.4 Miscellaneous 18
5.4.1 User and Power LEDs 18
5.4.2 User and Reset Switches 19
5.4.3 MCU Boot Mode 20
5.4.4 MCU Clocks 20

Downloaded from Arrow.com.

6. MCU Native Pin Access Area 21
6.1 Breakout Pin Headers 21
6.2 MCU Current Measurement 21

7. Expansion Boards 22
7.1 Camera Expansion Board 22
7.1.1 Connecting the Camera Expansion Board to the FPB-RA8E1 Board 22
7.1.2 Signal Assignments 23

8. Certifications....24
8.1 EMC/EMI Standards.... 24
8.2 Material Selection, Waste, Recycling and Disposal Standards 24
8.3 Safety Standards 24

9. Design and Manufacturing Information 25

10. Website and Support 25

Revision History....26

Figures

Figure 1. FPB-RA8E1 Board Top Side.... 5
Figure 2. FPB-RA8E1 Board Bottom Side.... 5
Figure 3. FPB-RA8E1 Board 6
Figure 4. FPB-RA8E1 Board Block Diagram.... 7
Figure 5. Copper Jumpers.... 8
Figure 6. Power Supply Options.... 11
Figure 7. 5V Header Connector and Test Point Location.... 12
Figure 8. FPB-RA8E1 Debug Interface 14
Figure 9. e^2 Studio Debugger Configurations.... 15
Figure 10. Pmod 1 Connector with Configuration E Pads.... 16
Figure 11. Pmod 2 Connector with Configuration E Pads.... 17
Figure 12. Arduino™ UNO Connectors.... 18
Figure 13. User LEDs 19
Figure 14. Power LED 19
Figure 15. Debug LED.... 19
Figure 16. Reset (S2) and User Switch (S1) 20
Figure 17. Boot Mode Jumpers (J6 and J16) 20
Figure 18. Native Pin Access Area.... 21
Figure 19. RA +3.3 V Current Measurement Circuit.... 22
Figure 20. RA MCU +3.3 V Current Measurement Test Point and R2.... 22
Figure 21. FPB-RA8E1 Board Connected with Camera Expansion Board.... 23

Downloaded from Arrow.com.

Tables

Table 1. Kit Architecture 7
Table 2. Default Jumper Configuration 9
Table 3. Debug Modes 12
Table 4. Jumper Connection Summary for Different Debug Modes 12
Table 5. Debug On-Board Jumper Configurations 13
Table 6. Debug USB Port Assignments 13
Table 7. Debug In Mode Jumper Configurations 14
Table 8. JTAG/SWD Port Assignments 14
Table 9. Pmod 1 Port Assignments 15
Table 10. Pmod 2 Port Assignments 16
Table 11. Arduino™ UNO Port Assignments 17
Table 12. FPB-RA8E1 Board LED Functions 18
Table 13. FPB-RA8E1 Board Switches 19
Table 14. Clock Crystal Part Numbers 20
Table 15. Camera Expansion Port Assignments 23
Table 16. FPB-RA8E1 Board Design Package Contents 25

Downloaded from Arrow.com.

1. Board Overview

The FPB-RA8E1, a Fast Prototyping Board for the RA8E1 MCU Group, enables users to seamlessly evaluate the features of the RA8E1 MCU group and develop embedded systems applications using Flexible Software Package (FSP) and the e^2 studio IDE. Users can use on-board features along with their choice of popular ecosystems add-ons to bring their big ideas to life.

The key features of the FPB-RA8E1 board are categorized in two groups (consistent with the architecture of the board) as follows:

MCU Native Pin Access

- R7FA8E1AFDCFB MCU (referred to as RA MCU)
- 360 MHz, Arm® Cortex®-M85 core
- 1 MB Code Flash, 12 KB Data Flash, 544 KB SRAM including 32KB of TCM
- 144-pin, LQFP package
- Native pin access through 1 x 20 and 2 x 50 male pin headers
- 20-pin Camera Interface connector
- MCU current measurement point for precision current consumption measurement
- Multiple clock sources - Low-precision (~1%) clocks are available internal to the RA MCU. RA MCU oscillator and sub-clock oscillator crystals, providing precision 20.000 MHz and 32,768 Hz reference clocks can be fitted to the board

System Control and Ecosystem Access

- Two 5 V input sources
  - USB Debug
  - External Power Supply
    - Using 2-pin header (not fitted)
    - Using TP7 and TP9
- Real Time Clock backup supply connector (not populated)
- Two Debug modes
  - Debug on-board (SWD)
  - Debug in (SWD, SWO and JTAG)
- User LEDs and buttons
  - Two User LEDs (green)
  - Power LED (green) indicating availability of regulated power
  - Debug LED (yellow) indicating the debug connection
  - One User button
  - One Reset button
- Two popular ecosystem expansions
  - Two Digilent Pmod™ (SPI, UART, I^{2}C) connectors
  - Arduino™ (UNO R3) connector
- MCU boot configuration jumper

Downloaded from Arrow.com.

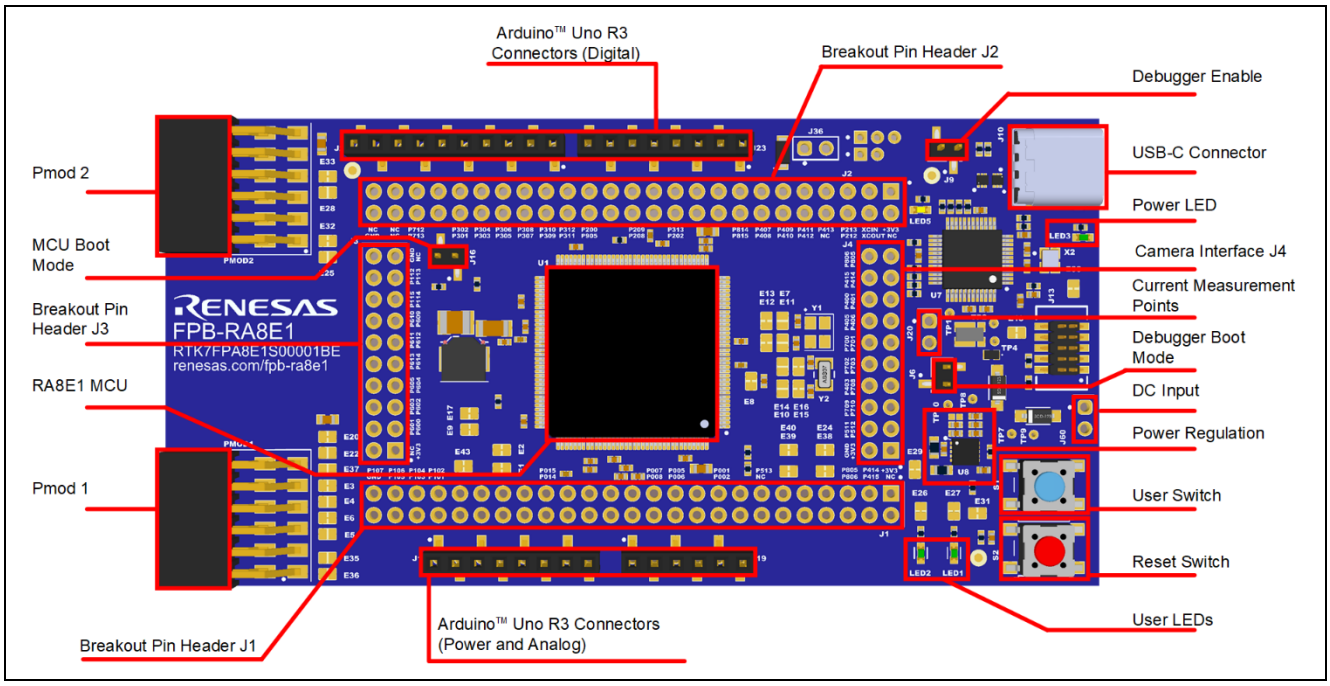

Figure 1. FPB-RA8E1 Board Top Side

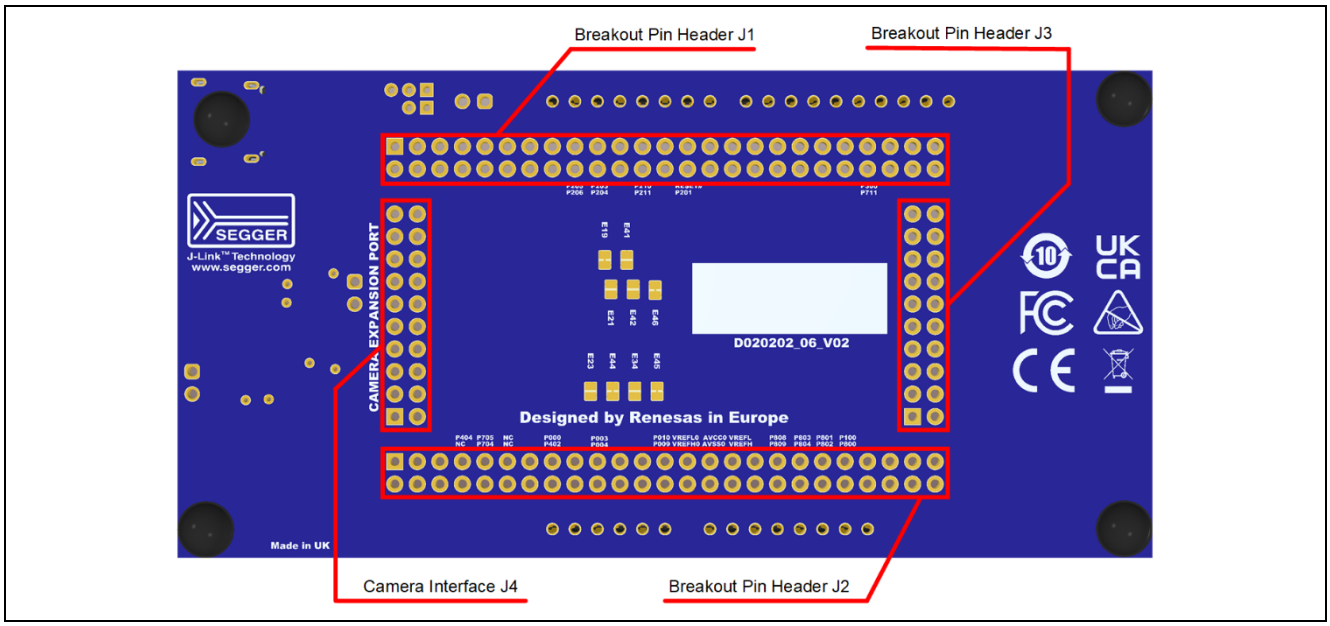

Figure 2. FPB-RA8E1 Board Bottom Side

1.1 Assumptions and Advisory Notes

1. It is assumed that the user has a basic understanding of microcontrollers and embedded systems hardware.
2. It is recommended that the user refers to the *FPB-RA8E1 Quick Start Guide* to get acquainted with the board.
3. Flexible Software Package (FSP) and Integrated Development Environment (IDE) such as e^2 studio are required to develop embedded applications on FPB-RA8E1 board.
4. Instructions to download and install software, import example projects, build them and program the FPB-RA8E1 board are provided in the tutorial manual.
5. The MCU fitted to the FPB board may not contain the latest version of the on-chip boot firmware.

Downloaded from Arrow.com.

2. Box Contents

The following components are included in the box:

1. FPB-RA8E1 v1 board
2. FPB-RA8E1 v1 Quick Start Guide

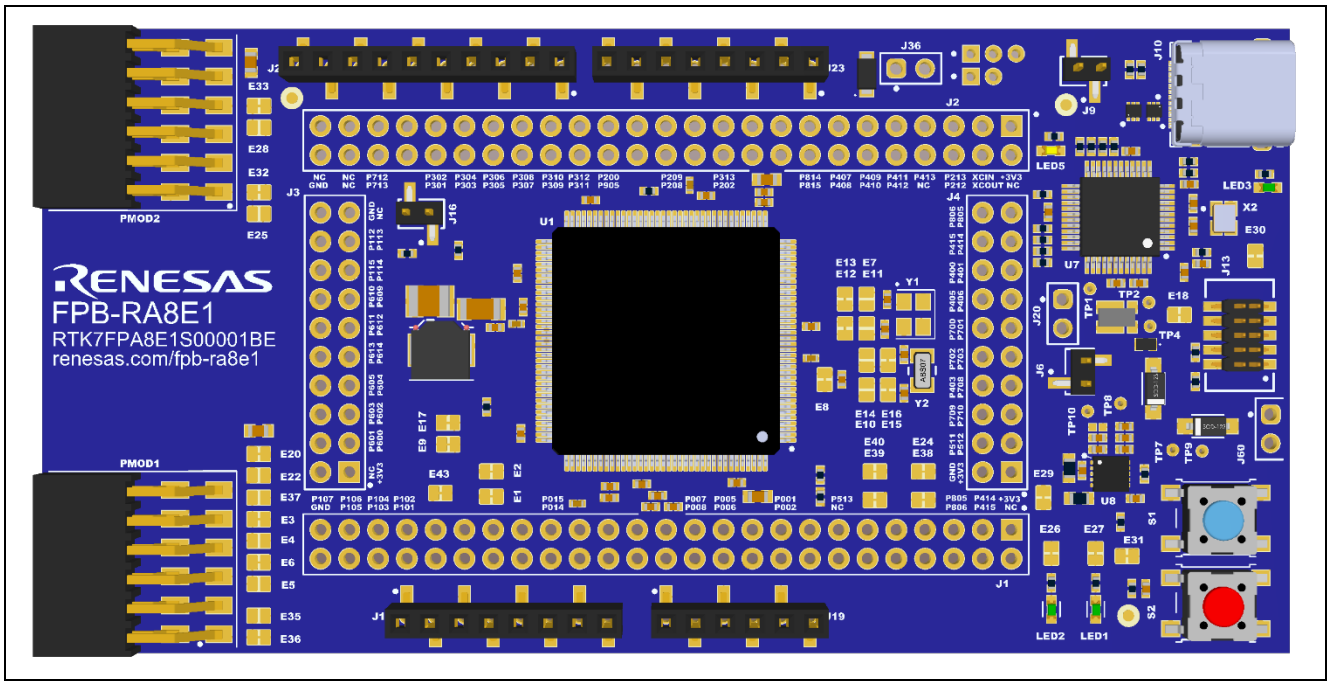

Figure 3. FPB-RA8E1 Board

3. Ordering Information

- FPB-RA8E1 v1 orderable part number: RTK7FPA8E1S0000**1**BE

  Note: The underlined character in the orderable part number represents the kit version.

- FPB-RA8E1 board dimensions: 55 mm (width) x 110 mm (length)

Downloaded from Arrow.com.

4. Hardware Architecture and Default Configurations

4.1 Board Architecture

The FPB-RA8E1 board is designed with an architecture similar to other boards in the FPB series. Alongside the MCU there is an on-board programmer, pin headers for access to all the pins on the MCU, a power supply regulator, some LEDs and switches, and several ecosystem I/O connectors (Pmod and Arduino™).

Table 1. Kit Architecture

Board Functionality	Features	Function present on all similar boards	Functionality is:
MCU Native Pin Access	RA MCU, breakout pin headers for all MCU I/O and power, camera interface connector and current measurement	Yes	MCU dependent
System Control and Ecosystem Access	Power, debugger, user LEDs and switches, reset switch, ecosystem connectors, boot configuration	Yes	Same or similar across other FPB boards

4.2 Block Diagram

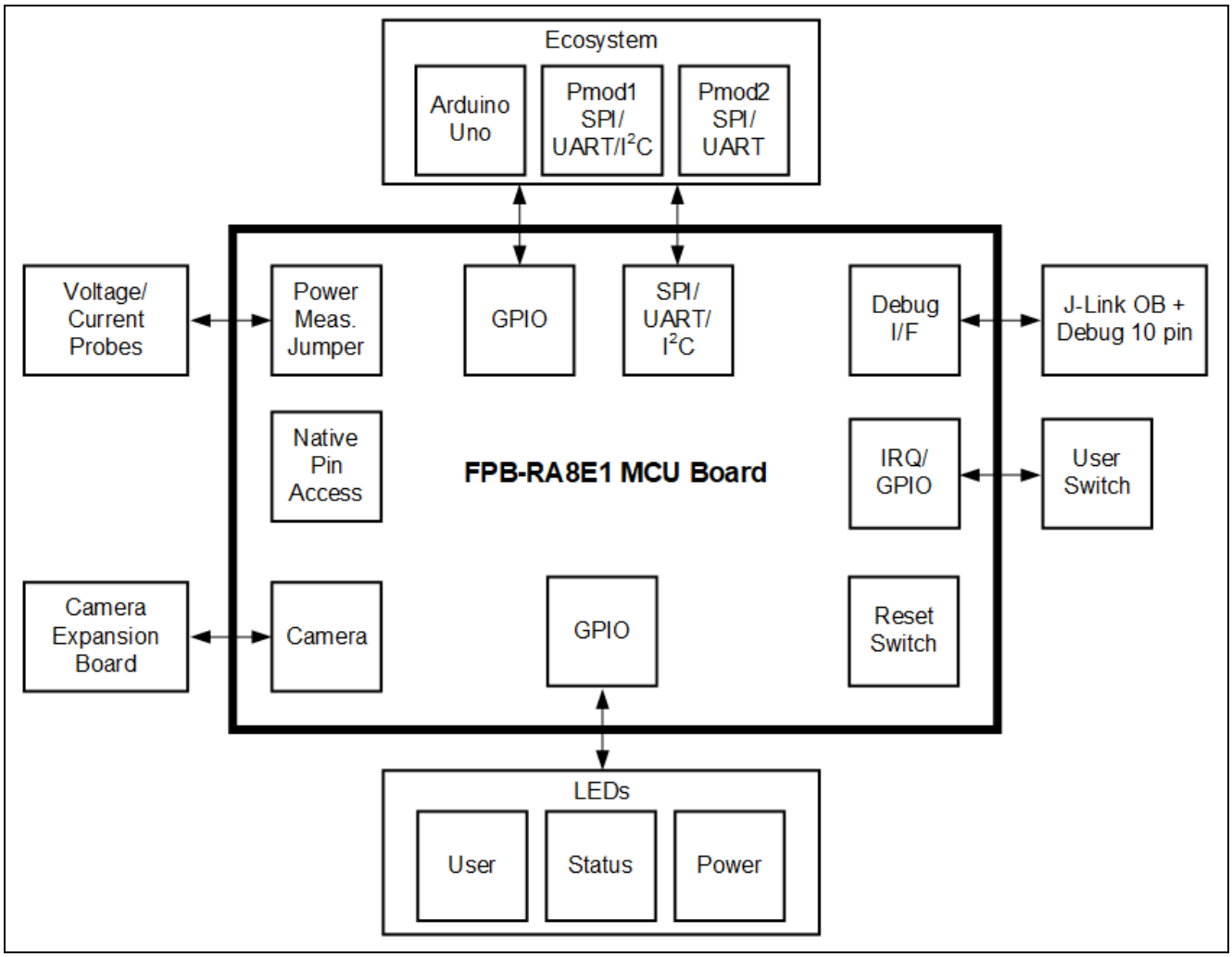

Figure 4. FPB-RA8E1 Board Block Diagram

Downloaded from Arrow.com.

4.3 Jumper Configurations

Two types of jumpers are provided on the FPB-RA8E1 board.

1. Copper jumpers (trace-cut type and solder bridge type)
2. Traditional pin header jumpers

The following sections describe each type and their default configuration.

4.3.1 Copper Jumpers

Copper jumpers are of two types, designated **trace-cut** and **solder-bridge**.

A **trace-cut jumper** is provided with a narrow copper trace connecting its pads. The silk screen overlay printing around a trace-cut jumper is a solid box. To isolate the pads, cut the trace between pads adjacent to each pad, then remove the connecting copper foil either mechanically or with the assistance of heat. Once the etched copper trace is removed, the trace-cut jumper is turned into a solder-bridge jumper for any later changes.

A **solder-bridge** jumper is provided with two isolated pads that may be joined together by one of three methods:

- Solder may be applied to both pads to develop a bulge on each and the bulges joined by touching a soldering iron across the two pads.
- A small wire may be placed across the two pads and soldered in place.
- A SMD resistor, size 0805, 0603 or 0402, may be placed across the two pads and soldered in place. A zero-ohm resistor shorts the pads together.

For any copper jumper, the connection is considered **closed** if there is an electrical connection between the pads (default for trace-cut jumpers). The connection is considered **open** if there is no electrical connection between the pads (default for the solder-bridge jumpers).

Figure 5. Copper Jumpers

4.3.2 Traditional Pin Header Jumpers

These jumpers are traditional small pitch jumpers that require an external shunt to open/close them. The traditional pin jumpers on the FPB-RA8E1 board are 2 mm pitch headers and require compatible 2 mm shunt jumpers.

Downloaded from Arrow.com.

4.3.3 Default Jumper Configurations

The following table describes the default configurations for each jumper on the FPB-RA8E1 board. This includes copper jumpers (Ex designation) and traditional pin jumpers (Jx designation).

The circuit group for each jumper is the designation found in the board schematic (available in the Design Package). Functional details for many of the listed jumpers may be found in sections associated with each functional area of the kits.

Table 2. Default Jumper Configuration

Location	Circuit Group	Default Open/Closed	Function
J6	Debugger	Open	Configures J-Link OB connection to MCU mode
J9	Debugger	Open	Configures RA4M2_RESET# for on-board debugger mode
J16	MCU Boot Mode	Open	Configures J-Link OB connection to MCU mode
J20 (not fitted)	Power	Not fitted	MCU current measurement
J36 (not fitted)	Power	Not fitted	Real Time Clock backup supply battery connector
J60 (not fitted)	Power	Not fitted	External +5 V power source connector
R2	Power	Fitted	Connects +3.3 V to MCU. Measure the voltage across this or remove for testing the MCU current draw using an ammeter.
E1	MCU Power	Closed	Connects VREFH (MCU pin 122) to +3.3 V
E2	MCU Power	Closed	Connects VREFL (MCU pin 121) to GND
E8	MCU Power	Closed	Connects VBATT (MCU pin 14) to +3.3 V
E24	MCU Power	Closed	Connects VREFH0 (MCU pin 126) to +3.3 V
E38	MCU Power	Closed	Connects VREFL0 (MCU pin 125) to GND
E39	MCU Power	Closed	Connects AVCC0 (MCU pin 123) to +3.3 V
E40	MCU Power	Closed	Connects AVSS0 (MCU pin 124) to GND
E43	MCU Power	Closed	Connects J14-8 to VREFH0 (MCU pin 126)
E7	MCU Clock	Open	Connects 20MHz crystal to MCU pin 20 (EXTAL)
E10	MCU Clock	Open	Connects XCIN_MCU to pin header J2-3
E11	MCU Clock	Open	Connects 20MHz crystal to MCU pin 19 (XTAL)
E12	MCU Clock	Closed	Connects J2-5 to MCU pin 19 (P213/XTAL)
E13	MCU Clock	Closed	Connects J2-6 to MCU pin 20 (P212/XTAL)
E14	MCU Clock	Open	Connects XCOUT_MCU to pin header J2-4
E15	MCU Clock	Closed	Connects 32,768 Hz crystal to MCU pin 16 (XCIN)
E16	MCU Clock	Closed	Connects 32,768 Hz crystal to MCU pin 17 (XCOUT)
E9	Debug	Closed	Connects P103 (RTS) to Debug VCOM port
E17	Debug	Closed	Connects P104 (CTS) to Debug VCOM port
E18	Debug	Closed	Connects MCU P209 to the debugger
E30	Debug	Closed	Connects the JTAG GND Detect pin 9 on J13 to GND
E29	Debug Power	Closed	Connects debugger power to the +3.3 V regulator
E26	User LED 2	Closed	Connects LED2 to P408
E27	User LED 1	Closed	Connects LED1 to P404
E31	User Switch S1	Closed	Connects S1 to P009
E3	Pmod 1	Closed	Connects Pmod 1 pin 4 to P611 (SCK0)
E4	Pmod 1	Open	Connects Pmod 1 pin 4 to P511 (SDA1)
E5	Pmod 1	Open	Connects Pmod 1 pin 3 to P512 (SCL1)
E6	Pmod 1	Closed	Connects Pmod 1 pin 3 to P610 (MISO0/RXD0)
E20	Pmod 1	Closed	Connects Pmod 1 pin 6 and pin 12 to +3.3 V
E22	Pmod 1	Open	Connects Pmod 1 pin 6 and pin 12 to +5 V

Downloaded from Arrow.com.

Location	Circuit Group	Default Open/Closed	Function
E35	Pmod 1	Open	Connects Pmod 1 pin 1 to P613 (CTS0)
E36	Pmod 1	Closed	Connects Pmod 1 pin 1 to P612 (SS0)
E37	Pmod 1	Open	Connects Pmod 1 pin 4 to P612 (RTS0)
E25	Pmod 2	Open	Connects Pmod 2 pin 1 to P800 (CTS2)
E28	Pmod 2	Open	Connects Pmod 2 pin 4 to P804 (RTS2)
E32	Pmod 2	Closed	Connects Pmod 2 pin 1 to P804 (SS2)
E33	Pmod 2	Closed	Connects Pmod 2 pin 4 to P803 (SCK2)
E19	Camera Interface	Closed	Connects P414 to J4 pin 17 for GPIO function
E21	Camera Interface	Open	Connects P415 to J4 pin 18 for GPIO function
E23	Camera Interface	Open	Connects P805 to J4 pin19 for GPIO function
E34	Camera Interface	Open	Connects P806 to J4 pin 20 for GPIO function
E41	Pin header	Open	Connects P414 to J1 pin 3 for breakout pin
E42	Pin header	Open	Connects P415 to J1 pin 4 for breakout pin
E44	Pin header	Closed	Connects P805 to J1 pin 5 for breakout pin
E45	Pin header	Closed	Connects P806 to J1 pin 6 for breakout pin
E46	Arduino	Closed	Connects P415 to J18 pin 4 for Arduino D3

Downloaded from Arrow.com.

5. System Control and Ecosystem Access

The FPB-RA8E1 provides a power supply regulator, an on-board debugger, simple I/O (switches and LEDs), and popular I/O ecosystem connectors. These are all described in detail below.

5.1 Power

The FPB-RA8E1 board is designed for +5 V operation. An on-board Low Dropout (LDO) Regulator is used to convert the 5 V supply to a 3.3 V supply. The 3.3 V supply is used to power the RA MCU and other peripheral features.

5.1.1 Power Supply Options

This section describes the different ways in which the FPB-RA8E1 board can be powered.

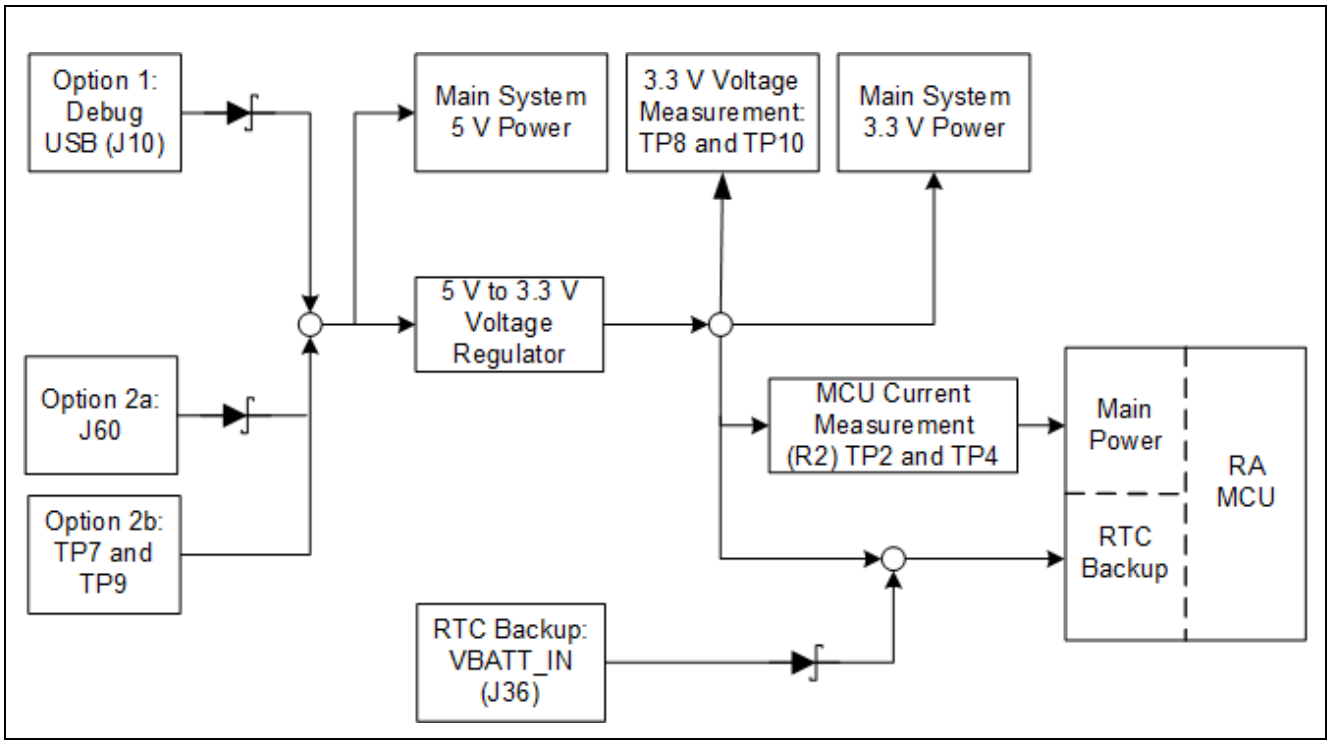

Figure 6. Power Supply Options

The MCU can be operated at a lower voltage than 3.3 V by removing the current measurement resistor (R2) and powering the MCU via J20.

Note: Other changes to the circuit where interfaces or pull-up resistors are used may also need to be removed. Please review the schematic carefully before making these changes.

5.1.1.1 Option 1: Debug USB

5 V may be supplied from an external USB host to the USB debug connector (J10). Power from this source is connected to the main system 5 V power. Reverse current protection is provided between this connector and the main system 5 V power.

5.1.1.2 Option 2: 5V Header Connector and Test Points

5 V may be supplied from an external power supply to connector J60. J60 is a standard 2-pin header on a 0.1” (2.54 mm) pitch. Pin 1 is +5 V, and pin 2 is GND. Power from this source is connected to the main system 5 V power. Reverse current protection is provided between J60 and the main system 5 V power. 5 V may also be supplied from an external power supply to test points on the board, TP7 (5 V) and TP9 (GND). Reverse current protection is not provided at the test points, please take caution to ensure correct polarity before connecting an external supply.

The header connector J60 and test points are located above the user switch.

Downloaded from Arrow.com.

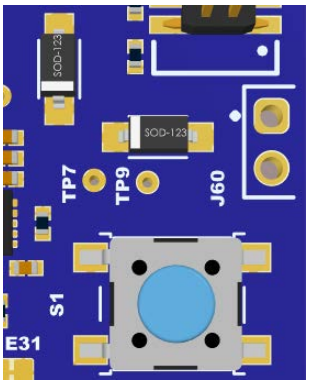

Figure 7. 5V Header Connector and Test Point Location

5.1.1.3 RTC Backup: VBATT Supply

The MCU provides a battery backup function that maintains power to certain MCU peripherals in the event of a power loss (for example the Real Time Clock). A battery (lithium coin cell etc.) can be connected to J36 (not fitted) to provide this power. For further details see the MCU hardware manual.

5.1.2 Power Supply Considerations

The on-board LDO regulator which supplies +3.3 V has a built-in current limit of 2.0 A. Make sure the total current required by the RA MCU, any active on-board features, and any connected peripheral devices does not exceed this limit.

Note: The total current available from a typical USB 2 host is 100 mA before enumeration, and 500 mA maximum. If using a USB A to C cable (USB 2) this limitation applies. If using a native USB-C to USB-C cable and a compliant source, this will supply 1A on the debug connection and up to 3 A for the device USB ports negotiated by the Renesas USB controller configuration. Depending on the configuration of the kit, multiple power sources may be required.

5.1.3 Power-up Behavior

When the board is powered using USB, the green LED marked LED3 will illuminate. In addition, the LEDs (LED1 and LED2) will count upwards in a binary sequence at a rate of 1 Hz, with the LEDs representing 1 or 0. When the user switch (S1) is pressed, the counting frequency is increased to 10 Hz. Future presses will cycle between the two rates.

5.2 Debug and Trace

The FPB-RA8E1 board can be programmed and debugged using the built-in SEGGER J-Link On-Board debugger and supports the following two debug modes.

Table 3. Debug Modes

Debug Modes	Debug MCU (the device that connects to the IDE on PC)	Target MCU (the device that is being debugged)	Debugging Interface/ Protocol	Connector Used
Debug on-board	RA4M2 (on-board)	RA8E1 (on-board)	SWD	USB-C (J10)
Debug in	External debugging tools	RA8E1 (on-board)	SWD, SWO, JTAG	10-pin connector (J13)

The following table summarizes the jumper configuration for each of the debug modes.

Table 4. Jumper Connection Summary for Different Debug Modes

Debug Modes	J6	J9
Debug on-board	Open	Open
Debug in	Open	Closed

Downloaded from Arrow.com.

5.2.1 Debug On-Board

Debug USB-C connector (J10) connects the SEGGER J-Link On-Board debugger to an external USB full speed host, allowing re-programming and debugging of the target RA MCU firmware. The J-Link On-Board debugger connects to the target RA MCU using the SWD interface.

To configure the FPB-RA8E1 board to use the Debug On-Board mode, configure the jumpers using the following table.

Table 5. Debug On-Board Jumper Configurations

Location	Open/Closed	Function
J6	Open	Target RA MCU MD connected to debug
J9	Open	RA4M2 Debug MCU in normal operation mode

Table 6. Debug USB Port Assignments

Debug USB Port Assignments		FPB-RA8E1
Pin	**Description**	**Signal/Bus**
J10-A1	GND	GND
J10-A2	TX1+	NC
J10-A3	TX1-	NC
J10-A4	VBUS	+5V_USB_DBG
J10-A5	CC1	USB_JLOB_CC1
J10-A6	DA+	USB_JLOB_P
J10-A7	DA-	USB_JLOB_N
J10-A8	SBU1	NC
J10-A9	VBUS	+5V_USB_DBG
J10-A10	RX2-	NC
J10-A11	RX2+	NC
J10-A12	GND	GND
J10-B1	GND	GND
J10-B2	TX2+	NC
J10-B3	TX2-	NC
J10-B4	VBUS	+5V_USB_DBG
J10-B5	CC2	USB_JLOB_CC2
J10-B6	DB+	USB_JLOB_P
J10-B7	DB-	USB_JLOB_N
J10-B8	SBU2	NC
J10-B9	VBUS	+5V_USB_DBG
J10-B10	RX1-	NC
J10-B11	RX1+	NC
J10-B12	GND	GND
J10-S1	SHIELD	GND
J10-S2	SHIELD	GND
J10-S3	SHIELD	GND
J10-S4	SHIELD	GND

A yellow indicator, LED5, shows the visual status of the debug interface. When the FPB-RA8E1 board is powered on, and LED5 is blinking, it indicates that the SEGGER J-Link On-Board debugger is not connected to a programming host. When LED5 is on solid, it indicates that it is connected to a programming interface. When LED5 is flickering, it indicates that data is being transferred between the SEGGER J-Link On-Board debugger and the programming host.

Downloaded from Arrow.com.

5.2.2 Debug In

The 10-pin Cortex® Debug Connector at J13 supports SWD, JTAG and SWO. This connector may be used for external debug of a target RA MCU.

To configure the FPB-RA8E1 board to use the Debug In mode, configure the jumpers using the following table.

Table 7. Debug In Mode Jumper Configurations

Location	Open/Closed	Function
J6	Open	Target RA MCU MD connected to debug
J9	Closed	J-Link OB Debug MCU is held in RESET

Table 8. JTAG/SWD Port Assignments

JTAG/SWD Connector			FPB-RA8E1
Pin	**JTAG Pin Name**	**SWD Pin Name**	**Signal/Bus**
J13-1	Vtref	Vtref	+3.3 V
J13-2	TMS	SWDIO	P210
J13-3	GND	GND	GND
J13-4	TCK	SWCLK	P211
J13-5	GND	GND	GND
J13-6	TDO	SWO	P209
J13-7	Key	Key	NC
J13-8	TDI	NC/EXTb	P208
J13-9	GNDDetect	GNDDetect	GND
J13-10	nSRST	nSRST	RESET#

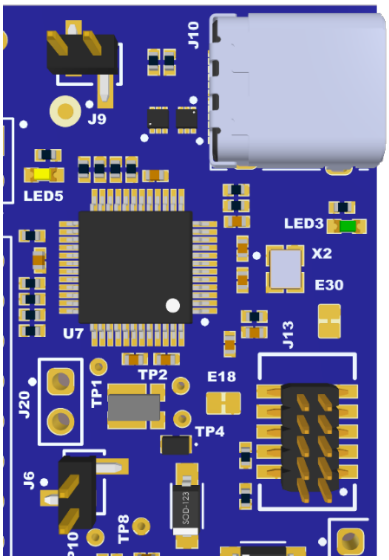

Figure 8. FPB-RA8E1 Debug Interface

5.2.3 Debugger configurations in e² studio

Figure 9 shows the configurations for e² studio when creating a new project for the FPB-RA8E1 Fast Prototyping Board.

[Debug hardware]: Select [J-Link ARM]

[Target Device]: Select [R7FA8E1AF]

Downloaded from Arrow.com.

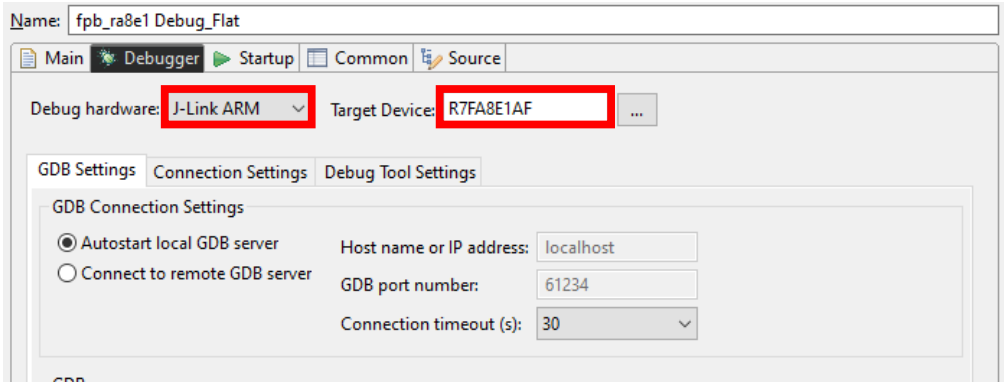

Figure 9. e² Studio Debugger Configurations

5.3 Ecosystem

The Ecosystem connectors provide users the option to simultaneously connect several third-party add-on modules compatible with two popular ecosystems using the following connectors:

1. Two Digilent Pmod™ (SPI, I²C and UART [Pmod 1] and SPI/UART [Pmod 2]) connectors
2. Arduino™ (UNO R3) connectors

5.3.1 Digilent Pmod™ Connectors

5.3.1.1 Pmod 1

A 12-pin Pmod Type-2A / Type-3A / Type-6A connector is provided at connector Pmod 1. The RA MCU acts as the master, and the connected module acts as a slave device.

This interface may additionally be re-configured in firmware as several other Pmod types.

Note: Pmod 1 uses the SCI peripheral in “Simple SPI” mode, and so does not offer the full functionality of the SPI peripheral. Please see the hardware manual for full details of the SCI “Simple SPI” mode.

Table 9. Pmod 1 Port Assignments

Pmod 1 Connector				FPB-RA8E1	Pmod 1 Configuration	
Pin	**Type-2A (SPI)**	**Type-3A (UART)**	**Type-6A (I²C)**	**Signal/Bus**	**Short**	**Open**
Pmod 1-1	SS		GPIO	P612 (SS0)	E36	E35
		CTS		P613 (CTS0)	E35	E36
Pmod 1-2	MOSI	TXD	GPIO	P609 (MOSI0/TXD0)		
Pmod 1-3	MISO	RXD		P610 (MISO0/RXD0)	E6	E5
			SCL	P512 (SCL1)	E5	E6
Pmod 1-4	SCK			P611 (SCK0)	E3	E4, E37
		RTS		P612 (RTS0)	E37	E3, E4
			SDA	P511 (SDA1)	E4	E3, E37
Pmod 1-5	GND			GND		
Pmod 1-6	VCC			+3.3 V	E20	E22
				+5.0 V	E22	E20
Pmod 1-7	GPIO / INT (slave to master)			P006 (IRQ11-DS)		
Pmod 1-8	GPIO / RESET (master to slave)			P604 (GPIO/RST)		
Pmod 1-9	GPIO			P605 (GPIO)		
Pmod 1-10	GPIO			P614 (GPIO)		
Pmod 1-11	GND			GND		
Pmod 1-12	VCC			+3.3 V	E20	E22
				+5.0 V	E22	E20

Downloaded from Arrow.com.

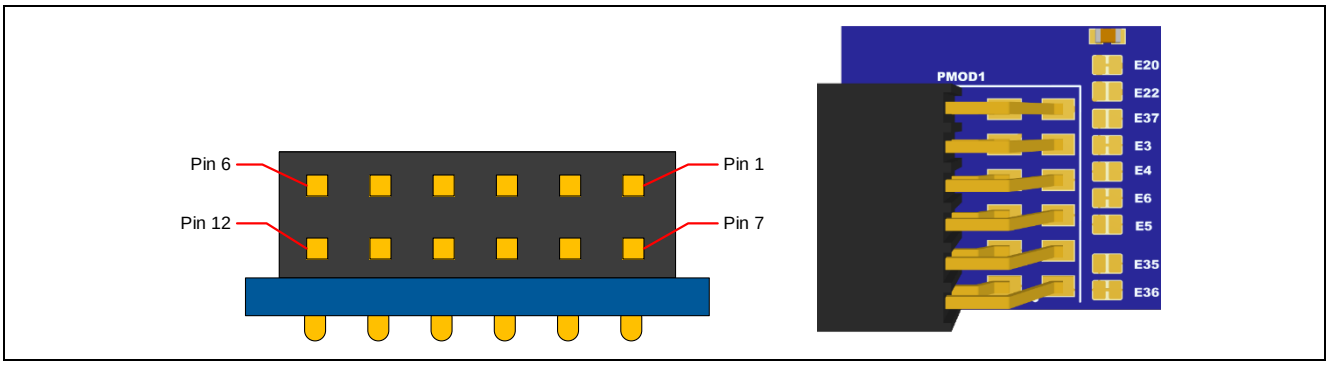

Figure 10. Pmod 1 Connector with Configuration E Pads

The default setting of the Pmod 1 interface supports +3.3 V devices. Please ensure that any Pmod device installed is compatible with a +3.3 V supply. There is also an alternative +5V supply option which can be configured using E20 and E22.

Note: Exercise caution while modifying power source trace jumpers, E20 and E22. Permanent damage to the FPB-RA8E1 board and/or connected modules may result.

5.3.1.2 Pmod 2

A 12-pin Pmod Type-2A / Type-3A connector is provided at connector Pmod 2. The RA MCU acts as the master, and the connected module acts as a slave device.

This Pmod interface supports +3.3 V devices. Please ensure that any Pmod device installed is compatible with a +3.3 V supply.

Note: Pmod 2 uses the SCI peripheral in “Simple SPI” mode, and so does not offer the full functionality of the SPI peripheral. Please see the hardware manual for full details of the SCI “Simple SPI” mode.

Table 10. Pmod 2 Port Assignments

Pmod 2 Connector			**FPB-RA8E1**	**Pmod 2 Configurations**	
Pin	**Option Type-2A (SPI)**	**Option Type-3A (UART)**	**Signal/Bus**	**Short**	**Open**
Pmod 2-1	SS		P804 (SS2)	E32	E25
		CTS	P800 (CTS2)	E25	E32
Pmod 2-2	MOSI	TXD	P801 (MOSI2/TXD2)		
Pmod 2-3	MISO	RXD	P802 (MISO2/RXD2)		
Pmod 2-4	SCK		P803 (SCK2)	E33	E28
		RTS	P804 (RTS2)	E28	E33
Pmod 2-5	GND		GND		
Pmod 2-6	VCC		+3.3 V		
Pmod 2-7	GPIO / INT (slave to master)		P010 (IRQ14)		
Pmod 2-8	GPIO / RESET (master to slave)		P106 (GPIO/RST)		
Pmod 2-9	GPIO		P107 (GPIO)		
Pmod 2-10	GPIO		P809 (GPIO)		
Pmod 2-11	GND		GND		
Pmod 2-12	VCC		+3.3 V		

Downloaded from Arrow.com.

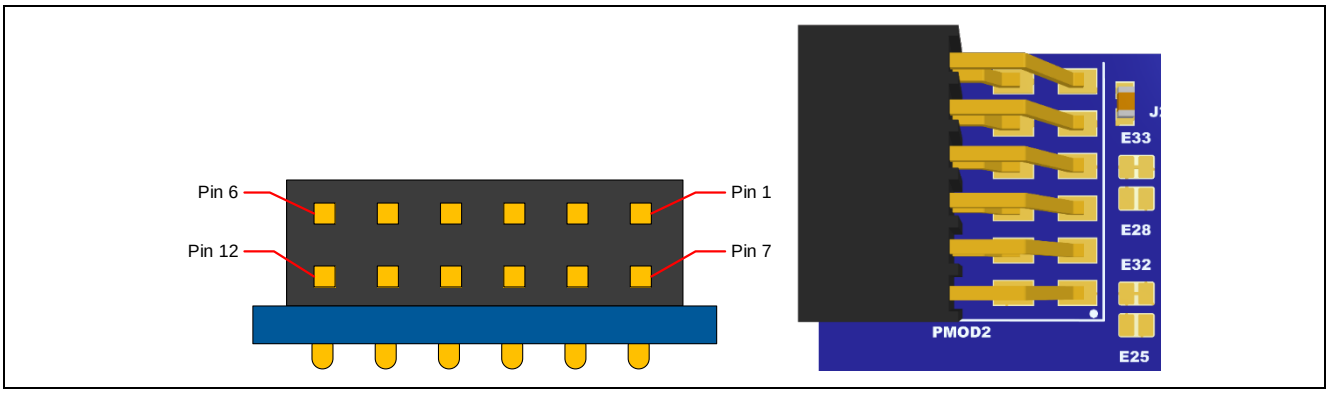

Figure 11. Pmod 2 Connector with Configuration E Pads

5.3.2 Arduino™ Connector

Near the center of the System Control and Ecosystem Access area is an Arduino™ UNO R3 compatible connector interface.

Table 11. Arduino™ UNO Port Assignments

Arduino™ Compatible Connector		**FPB-RA8E1**
Pin	**Description**	**Signal/Bus**
J11-1	NC	NC
J11-2	IOREF	+3.3 V
J11-3	RESET	P105 (ARDUINO_RESET#)
J11-4	3.3 V	+3.3 V
J11-5	5 V	+5.0 V
J11-6	GND	GND
J11-7	GND	GND
J11-8	VIN	NC
J15-1	A0	P004 (AN000)
J15-2	A1	P003 (AN104)
J15-3	A2	P007 (AN004)
J15-4	A3	P001 (AN101)
J15-5	A4	P014 (AN007/DA0)
J15-6	A5	P015 (AN105)
J18-1	D0 / RXD	P309 (RXD3)
J18-2	D1 / TXD	P310 (TXD3)
J18-3	D2 / INT0 / PWM	P300 (GPIO/IRQ4/GTIOC3A)
J18-4	D3 / INT1 / PWM	P415 (GPIO/IRQ8/GTIOC0A)*
J18-5	D4 / INT2	P905 (GPIO/IRQ8)*
J18-6	D5 / PWM	P114 (GPIO/GTIOC2B)
J18-7	D6 / PWM	P113 (GPIO/GTIOC2A)
J18-8	D7 / PWM	P302 (GPIO/GTIOC4A)
J14-1	D8	P303 (GPIO)
J14-2	D9 / PWM	P112 (GPIO/GTIOC3B)
J14-3	D10 / SPI_SS / PWM	P204 (GPIO/SSLA/GTIOC4B)
J14-4	D11 / SPI_MOSI / PWM	P202 (GPIO/MOSIA/GTIOC5B)
J14-5	D12 / SPI_MISO	P313 (GPIO/MISOA)
J14-6	D13 / SPI_SCK /PWM	P203 (GPIO/RSPCKA/GTIOC5A)
J14-7	GND	GND
J14-8	AREF	VREFH0

Downloaded from Arrow.com.

Arduino™ Compatible Connector		FPB-RA8E1
Pin	**Description**	**Signal/Bus**
J14-9	I²C SDA	P511 (SDA1)
J14-10	I²C SCL	P512 (SCL1)

*IRQ8 can be used on D3 or D4.

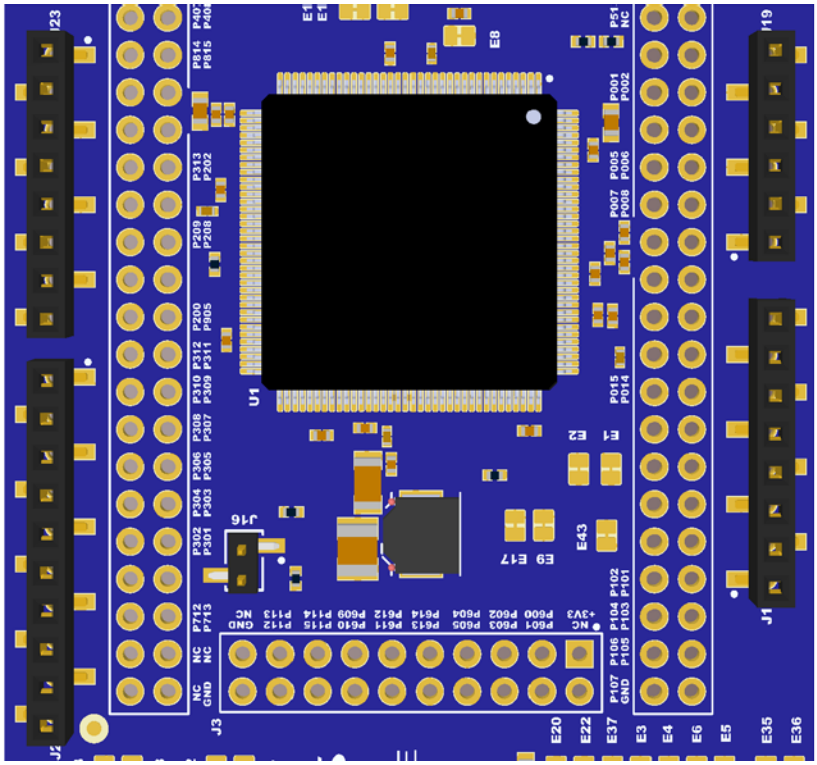

Figure 12. Arduino™ UNO Connectors

5.4 Miscellaneous

5.4.1 User and Power LEDs

Four LEDs are provided on the FPB-RA8E1 board.

Behavior of the LEDs on the FPB-RA8E1 board is described in the following table.

Table 12. FPB-RA8E1 Board LED Functions

Designator	Color	Function	MCU Control Port
LED1	Green	User LED	P404 (GTIOC3B)
LED2	Green	User LED	P408 (GTIOC10A)
LED3	Green	Power on indicator	+3.3 V
LED5	Yellow	Debug LED	SEGGER J-Link On-Board Debugger MCU

The User LEDs may be isolated from the main MCU so that the associated ports can be used for other purposes. To disconnect LED1 from P404, trace cut jumper E27 must be open. To disconnect LED2 from P408, trace cut jumper E26 must be open.

Downloaded from Arrow.com.

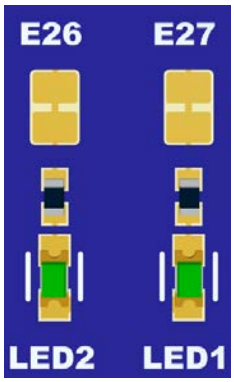

Figure 13. User LEDs

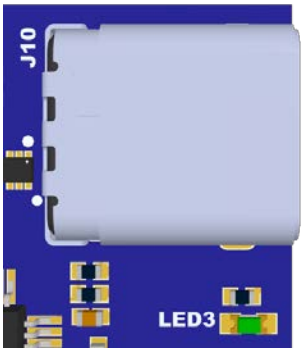

Figure 14. Power LED

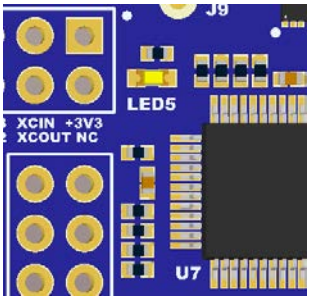

Figure 15. Debug LED

5.4.2 User and Reset Switches

Two miniature, momentary, mechanical push-button type SMD switches are mounted on the FPB-RA8E1 board.

Pressing the reset switch (S2) generates a reset signal to restart the RA MCU.

Table 13. FPB-RA8E1 Board Switches

Designator	Function	MCU Control Port
S1	User Switch	P009 (IRQ13-DS)
S2	MCU Reset Switch	RESET#

The User Switch S1 may be isolated from the MCU, so that the associated port can be used for other purposes. To disconnect S1 from P009, trace cut jumper E31 must be open.

Downloaded from Arrow.com.

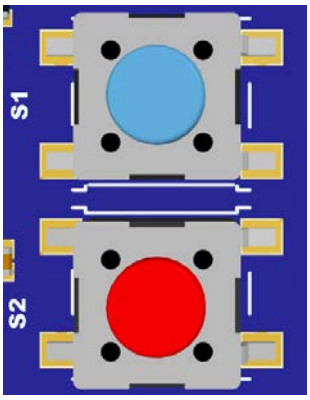

Figure 16. Reset (S2) and User Switch (S1)

5.4.3 MCU Boot Mode

Two-pin headers J16 and J6 can be used to select the boot mode (P201) of the target RA MCU. For normal operation (single-chip mode), leave J16 open and J6 closed. To enable SCI boot mode, place a jumper on J16 and leave J6 open.

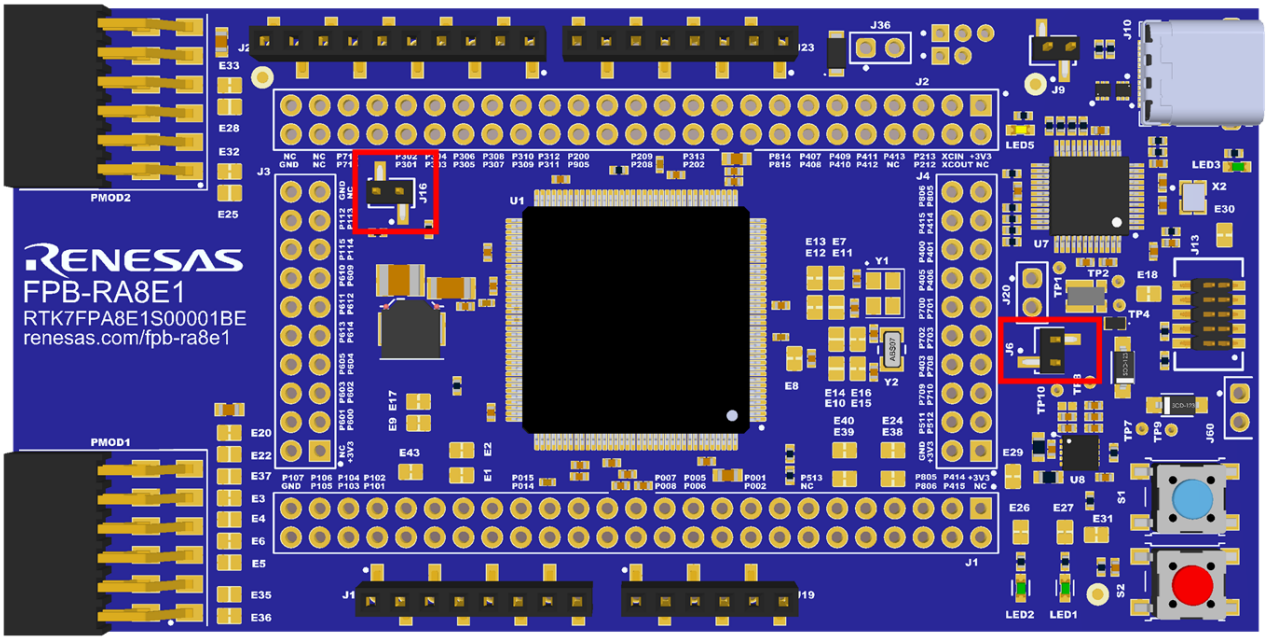

Figure 17. Boot Mode Jumpers (J6 and J16)

5.4.4 MCU Clocks

The board is fitted with a RA MCU sub-clock oscillator crystal, providing a precision 32,768 Hz reference clock. The option has also been provided to fit an RA MCU oscillator crystal, providing a precision 20.000 MHz reference clock. A recommended part is the ABRACON ABM8-20.000MHZ-10-B1U-T.

Table 14. Clock Crystal Part Numbers

Clock	Schematic Reference	Manufacturer and Part Number
20.000 MHz	Y1	ABRACON ABM8-20.000MHZ-10-B1U-T
32,768 Hz	Y2	ABRACON ABS07-32.768KHZ-T

Downloaded from Arrow.com.

6. MCU Native Pin Access Area

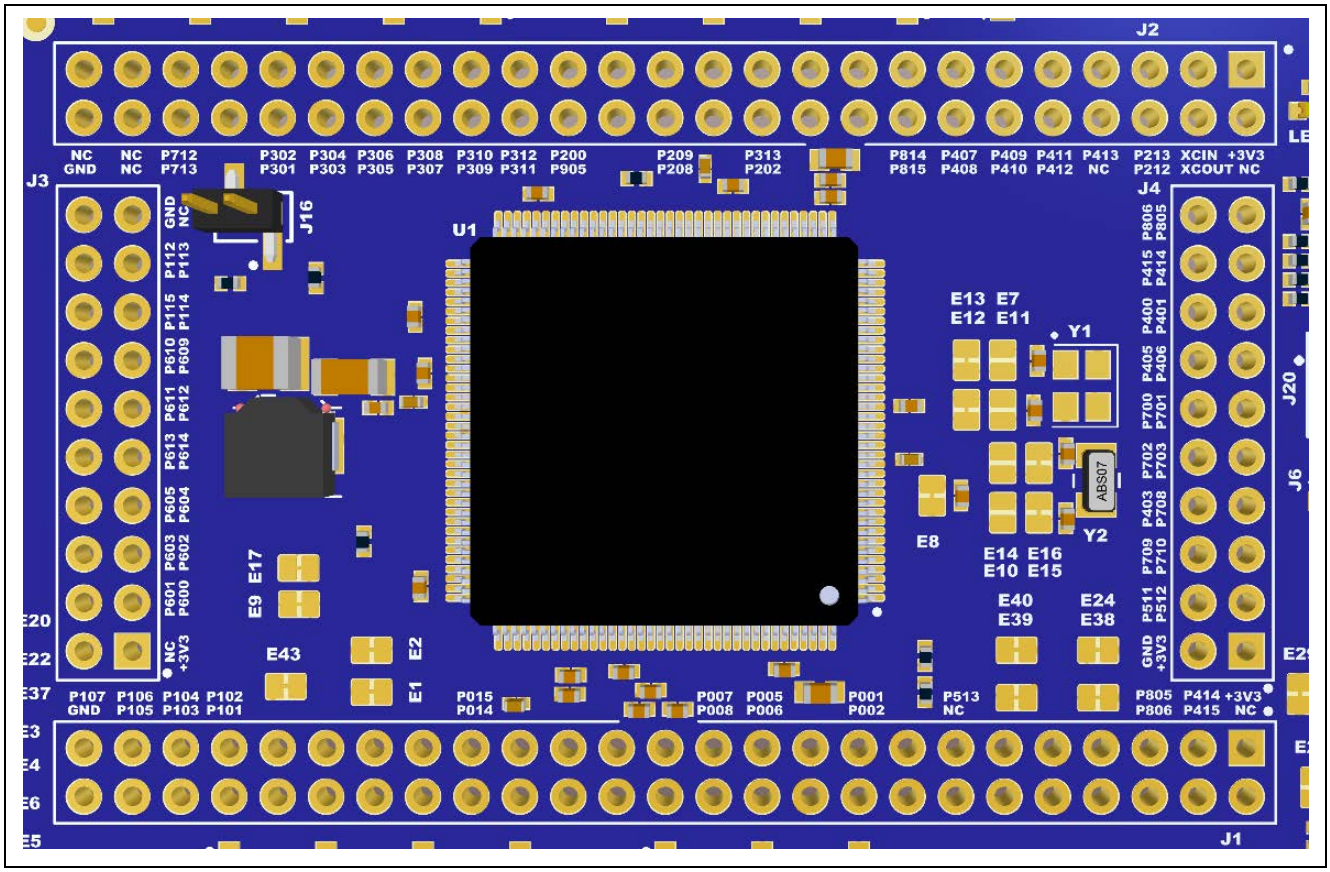

Figure 18. Native Pin Access Area

6.1 Breakout Pin Headers

The FPB-RA8E1 board pin headers (not fitted), J1, J2 and J3, provide access to all RA MCU interface signals, and to voltages for all RA MCU power ports. Each pin is labelled with the voltage or port connected to it. Refer to the RA8E1 MCU Group User's Manual for details of each port function, and the FPB-RA8E1 board schematic for pin header port assignments.

The placement of the breakout pin headers allows for a standard 2.54 mm (0.1") center breadboard to be placed on both pin headers simultaneously. This can be used for prototyping and testing of custom circuitry for use with the RA8E1 MCU.

6.2 MCU Current Measurement

Included near the camera expansion header J4 is resistor R2 and pin header J20 to measure the MCU core current.

The FPB-RA8E1 board provides a precision 5 mΩ resistor R2 (SMD 0805). Measure the voltage drop across R2 using TP2 and TP4 then apply Ohm's Law to calculate the MCU core current. Alternatively, R2 can be removed in order to measure the current consumption using an ammeter connected across J20.

Downloaded from Arrow.com.

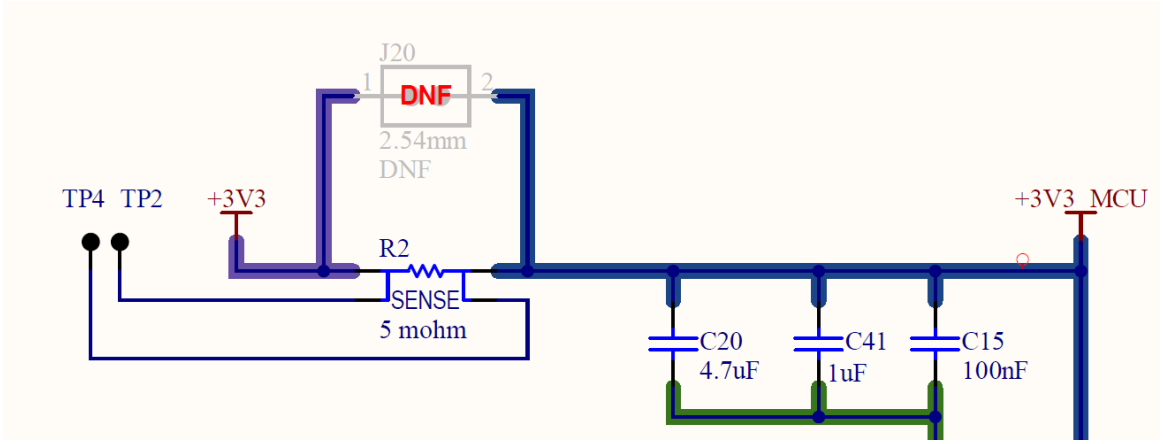

Figure 19. RA +3.3 V Current Measurement Circuit

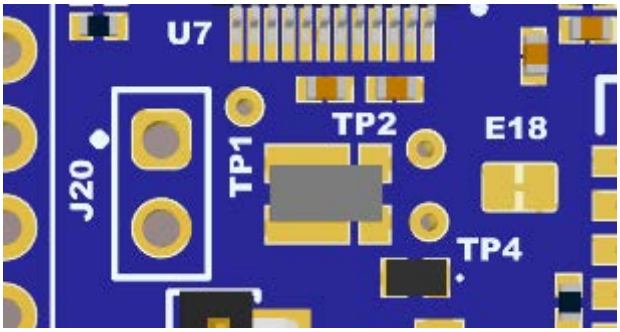

Figure 20. RA MCU +3.3 V Current Measurement Test Point and R2

7. Expansion Boards

The FPB-RA8E1 board supports camera add-on modules on the connector J4 (not fitted).

7.1 Camera Expansion Board

7.1.1 Connecting the Camera Expansion Board to the FPB-RA8E1 Board

FPB-RA8E1 supports off-the-shelf "Arducam 1/4″ 3 Mega pixel M12 Mount OV3640 Camera Module with JPEG Output." It connects to the FPB-RA8E1 board using the Camera Expansion Port J4 (not fitted). Some of the key features of the Camera Expansion Board are as follows:

- External ¼ inch high quality M12x0.5 lens, size:1/4″
- Active array size: 2048 x 1536
- Interface: Parallel RAW, RGB, YUV, JPEG output
- Output formats: (8-bit):
  - YUV (422/420) / YCbCr422,
  - RGB565/555/444
  - 8-bit compression data
  - 8/10-bit raw RGB data
- Maximum image transfer rate:
  - 3 megapixel (2048 x 1536): 15 fps (and any size scaling down from 3 megapixel)
  - XGA (1024 x 768): 30 fps
- Scan mode: progressive
- Input clock frequency: 6 ~ 54 MHz
- Shutter: rolling shutter

The part number of the Camera Expansion Board is ArduCam B0156. For more details, please visit arducam.com

Downloaded from Arrow.com.

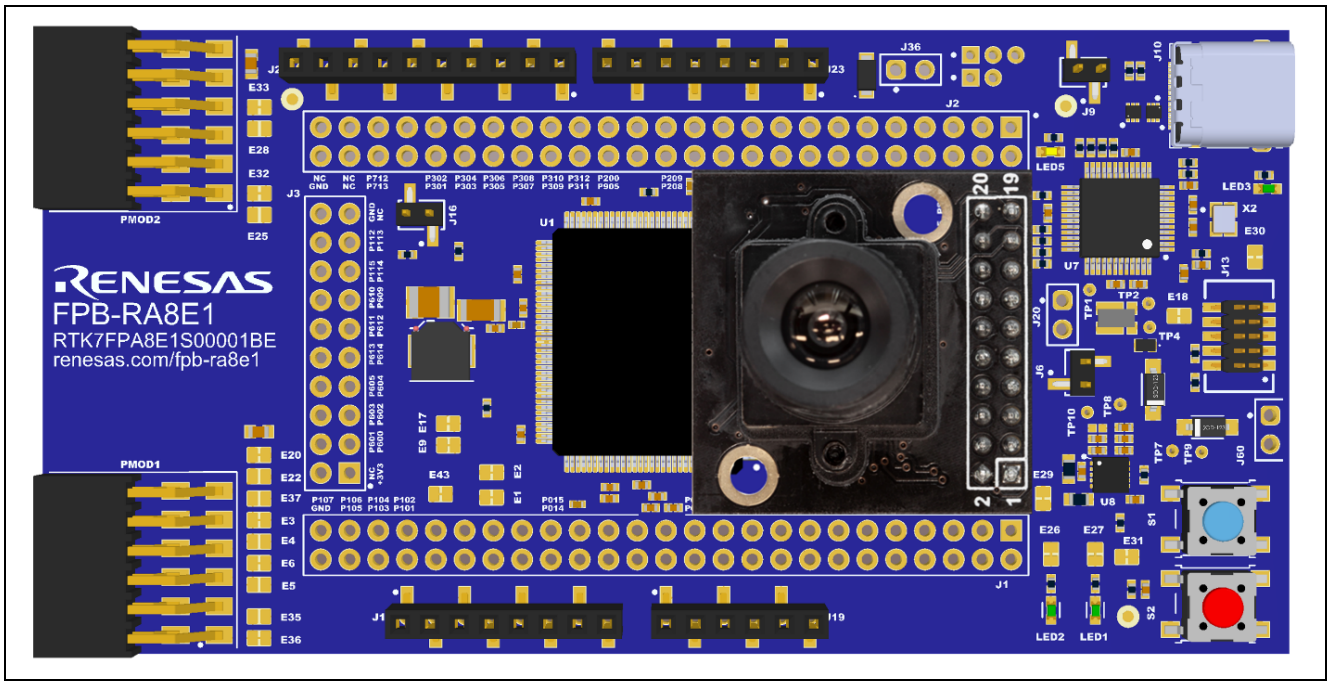

Figure 21. FPB-RA8E1 Board Connected with Camera Expansion Board

7.1.2 Signal Assignments

The camera interface connector J4 connects the FPB-RA8E1 board to camera expansion module.

Table 15. Camera Expansion Port Assignments

Camera Expansion Port Assignments		FPB-RA8E1
Pin	**Description**	**Signal/Bus**
J4-1	+3.3 V	+3.3 V
J4-2	GND	GND
J4-3	I^2C SCL	P512 (SCL1)
J4-4	I^2C SDA	P511 (SDA1)
J4-5	CAM_VD	P710
J4-6	CAM_HD	P709
J4-7	CAM_CLK	P708
J4-8	CAM_XCLK	P403
J4-9	CAM_D7	P703
J4-10	CAM_D6	P702
J4-11	CAM_D5	P701
J4-12	CAM_D4	P700
J4-13	CAM_D3	P406
J4-14	CAM_D2	P405
J4-15	CAM_D1	P401
J4-16	CAM_D0	P400
J4-17	Power off	P414
J4-18	GPIO	P415[*1]
J4-19	GPIO	P805[*2]
J4-20	GPIO	P806[*3]

[*1]Please short E21 and open E42 and E46
[*2]Please short E23 and open E44
[*3]Please short E34 and open E45

Downloaded from Arrow.com.

8. Certifications

The FPB-RA8E1 v1 board meets the following certifications/standards. See page 4 of this user's manual for the disclaimer and precautions.

8.1 EMC/EMI Standards

- FCC Notice (Class A)

  This device complies with part 15 of the FCC Rules. Operation is subject to the following two conditions: (1) This device may not cause harmful interference, and (2) this device must accept any interference received, including interference that may cause undesired operation.

  NOTE- This equipment has been tested and found to comply with the limits for a Class A digital device, pursuant to Part 15 of the FCC Rules. These limits are designed to provide reasonable protection against harmful interference in a residential installation. This equipment generates, uses and can radiate radio frequency energy and, if not installed and used in accordance with the instructions, may cause harmful interference to radio communications. However, there is no guarantee that interference will not occur in a particular installation. If this equipment does cause harmful interference to radio or television reception, which can be determined by turning the equipment off and on, the user is encouraged to try to correct the interference by one or more of the following measures:
  - Reorient or relocate the receiving antenna.
  - Increase the separation between the equipment and receiver.
  - Connect the equipment into an outlet on a circuit different from that to which the receiver is connected.
  - Consult the dealer or an experienced radio/television technician for help.
- Innovation, Science and Economic Development Canada ICES-003 Compliance:

  CAN ICES-3 (A)/NMB-3(A)
- CE Class A (EMC)

  This product is herewith confirmed to comply with the requirements set out in the Council Directives on the Approximation of the laws of the Member States relating to Electromagnetic Compatibility Directive 2014/30/EU.

  Warning – This is a Class A product. In a domestic environment this product may cause radio interference in which case the user may be required to take adequate measures to correct this interference.
- UKCA Class A (EMC)

  This product is in conformity with the following relevant UK Statutory Instrument(s) (and its amendments): 2016 No. 1091 Electromagnetic Compatibility Regulations 2016.

  Warning – This is a Class A product. In a domestic environment this product may cause radio interference in which case the user may be required to take adequate measures to correct this interference.
- Taiwan: Chinese National Standard 13438, C6357 compliance, Class A limits
- Australia/New Zealand AS/NZS CISPR 32:2015, Class A

8.2 Material Selection, Waste, Recycling and Disposal Standards

- EU RoHS
- WEEE
- China SJ/T 113642014, 10-year environmental protection use period.

8.3 Safety Standards

- UL 94V-0

Downloaded from Arrow.com.

9. Design and Manufacturing Information

The design and manufacturing information for the FPB-RA8E1 v1 kit is available in the "FPB-RA8E1 v1 Design Package" available on renesas.com/fpb-ra8e1.

- Design package file name: fpb-ra8e1-v1-designpackage.zip
- Design package contents

Table 16. FPB-RA8E1 Board Design Package Contents

File Type	Content	File/Folder Name
File (PDF)	Schematics	fpb-ra8e1-v1-schematics
File (PDF)	Mechanical Drawing	fpb-ra8e1-v1-mechdwg
File (PDF)	3D Drawing	fpb-ra8e1-v1-3d
File (PDF)	BoM	fpb-ra8e1-v1-bom
Folder	Manufacturing Files	Manufacturing Files
Folder	Design Files	Design Files-Altium

10. Website and Support

Visit the following URLs to learn about the kit and the RA family of microcontrollers, download tools and documentation, and get support.

FPB-RA8E1 Resources	renesas.com/fpb-ra8e1
RA Kit Information	renesas.com/ra/kits
RA Product Information	renesas.com/ra
RA Product Support Forum	renesas.com/ra/forum
RA Videos	renesas.com/ra/videos
Renesas Support	renesas.com/support

Downloaded from Arrow.com.

Revision History

Rev.	Date	Description	
		Page	Summary
1.00	Oct.11.24	—	Initial Release

Downloaded from Arrow.com.

FPB-RA8E1 v1 – User's Manual

Publication Date: Oct.11.24

Published by: Renesas Electronics Corporation

Downloaded from Arrow.com.

FPB-RA8E1 v1 – User's Manual

Renesas Electronics Corporation

R20UT5474EG0100

Downloaded from Arrow.com.