Overview

The F861 Series is constructed of metallized polypropylene film encapsulated with self-extinguishing resin in a box of material meeting the requirements of UL 94 V–0.

Applications

For use as electromagnetic interference (EMI) noise suppression in across-the-line applications requiring X2 safety classification according to IEC 60384–14. Not for use in "series with mains" and as AC Power filtering type applications.

Benefits

- Approvals: ENEC, UL, cUL, CQC
- Rated voltage: 310 VAC 50/60 Hz
- Capacitance range: 0.01 – 4.7 µF
- Lead spacing: 7.5 – 37.5 mm
- Capacitance tolerance: ±20%, ±10%
- Climatic category: 40/110/56, IEC 60068–1
- Tape & Reel in accordance with IEC 60286–2
- RoHS Compliant and lead-free terminations
- Operating temperature range of -40°C to +110°C
- 100% screening factory test at 1,900 VDC

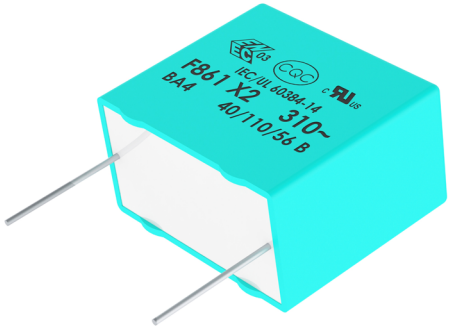

Part Number System

F	861	B	C	104	M	310	C
Capacitor Class	Series	Lead Spacing (mm)	Size Code	Capacitance Code (pF)	Capacitance Tolerance	Voltage (VAC)	Packaging
F = Film	X2, Metallized Polypropylene	K = 7.5 A = 10 B = 15 D = 22.5 F = 27.5 R = 37.5	See Dimension Table	First two digits represent significant figures. Third digit specifies number of zeros.	K = ±10% M = ±20%	310	See Ordering Options Table

Downloaded from Arrow.com.

Ordering Options Table

Lead Spacing Nominal (mm)	Type of Leads and Packaging	Lead Length (mm)	Lead and Packaging Code
7.5	**Standard Lead and Packaging Options**		
	Bulk (Bag) – Short Leads	4+2/−0	C
	Bulk (Bag) – Long Leads	17+0/−1	A
	Tape & Reel (Standard Reel)	H_0= 18.5±0.5	L
	Other Lead and Packaging Options		
	Bulk (Bag) – Short Leads	3.2 +0.3/-0.2	CL32K
	Bulk (Bag) – Maximum Length Leads	20+5/−0	ALL0L
	Ammo Pack	H_0= 18.5±0.5	R
10	**Standard Lead and Packaging Options**		
	Bulk (Bag) – Short Leads	4+2/−0	C
	Bulk (Bag) – Long Leads	17+0/−1	A
	Tape & Reel (Standard Reel)	H_0= 18.5±0.5	L
	Other Lead and Packaging Options		
	Bulk (Bag) – Short Leads	3.2 +0.3/-0.2	CL32K
	Bulk (Bag) – Maximum Length Leads	20+5/−0	ALL0L
	Ammo Pack	H_0= 18.5±0.5	R
	Tape & Reel (Large Reel)	H_0= 18.5±0.5	P
15	**Standard Lead and Packaging Options**		
	Bulk (Bag) – Short Leads	4+2/−0	C
	Bulk (Bag) – Long Leads	17+0/−1	A
	Tape & Reel (Standard Reel)	H_0= 18.5±0.5	L
	Pizza Pack	4+2/−0	Z
	Other Lead and Packaging Options		
	Pizza – Short Leads	3.2 +0.3/-0.2	ZL32K
	Bulk (Bag) – Maximum Length Leads	25+5/−0	ALR0L
	Ammo Pack	H_0= 18.5±0.5	R
	Tape & Reel (Large Reel)	H_0= 18.5±0.5	P

Downloaded from Arrow.com.

Ordering Options Table cont.

Lead Spacing Nominal (mm)	Type of Leads and Packaging	Lead Length (mm)	Lead and Packaging Code
22.5	**Standard Lead and Packaging Options**		
	Pizza – Long Leads	17+0/-1	ZLH0J
	Pizza Pack	4+2/-0	Z
	Other Lead and Packaging Options		
	Pizza – Short Leads	3.2 +0.3/-0.2	ZL32K
	Tape & Reel (Standard Reel)	H_0= 18.5±0.5	L
	Tape & Reel (Large Reel)	H_0= 18.5±0.5	P
	Ammo Pack	H_0= 18.5±0.5	R
27.5	**Standard Lead and Packaging Options**		
	Pizza – Long Leads	17+0/-1	ZLH0J
	Pizza Pack	4+2/-0	Z
	Pizza – Short Leads	3.2 +0.3/-0.2	ZL32K
37.5	**Standard Lead and Packaging Options**		
	Pizza – Long Leads	17+0/-1	ZLH0J
	Pizza Pack	4+2/-0	Z
	Pizza – Short Leads	3.2 +0.3/-0.2	ZL32K

Downloaded from Arrow.com.

Dimensions – Millimeters

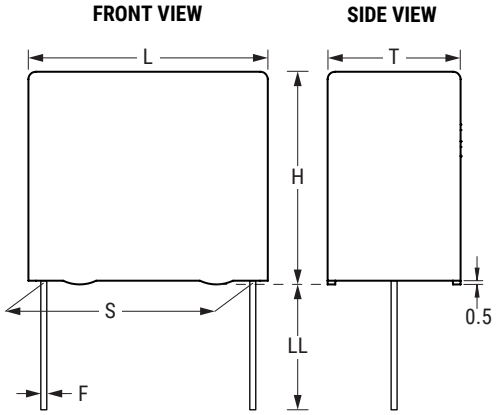

Size Code	Version	S		T		H		L		F	
		Nominal	Tolerance	Nominal	Tolerance	Nominal	Tolerance	Nominal	Tolerance	Nominal	Tolerance
KG		7.5	±0.4	4	+0/-0.5	8.0	+0/-0.5	10.0	+0/-0.5	0.6	±0.05
KH		7.5	±0.4	4	+0/-0.5	9.0	+0/-0.5	10.0	+0/-0.5	0.6	±0.05
KJ		7.5	±0.4	5	+0/-0.5	10.5	+0/-0.5	10.0	+0/-0.5	0.6	±0.05
KM		7.5	±0.4	6	+0/-0.5	12.0	+0/-0.5	10.5	+0/-0.5	0.6	±0.05
AG		10.0	±0.4	4.0	+0/-0.5	9.0	+0/-0.5	13.0	+0/-0.5	0.6	±0.05
AK		10.0	±0.4	5.0	+0/-0.5	11.0	+0/-0.5	13.0	+0/-0.5	0.6	±0.05
AP		10.0	±0.4	6.0	+0/-0.5	12.0	+0/-0.5	13.0	+0/-0.5	0.6	±0.05
AO		10.0	±0.4	7.0	+0/-0.5	17.0	+0/-0.5	13.0	+0/-0.5	0.6	±0.05
AL	Low Profile	10.0	±0.4	9.5	+0/-0.5	7.5	+0/-0.5	13.0	+0/-0.5	0.6	±0.05
AE	Special Version	10.0	±0.4	4.0	+0/-0.5	8.0	+0/-0.5	13.0	+0/-0.5	0.6	±0.05
BB		15.0	±0.4	4.0	+0/-0.5	10.0	+0/-0.5	18.0	+0/-0.5	0.8	±0.05
BC		15.0	±0.4	5.0	+0/-0.5	11.0	+0/-0.5	18.0	+0/-0.5	0.8	±0.05
BE		15.0	±0.4	5.5	+0/-0.5	12.5	+0/-0.5	18.0	+0/-0.5	0.8	±0.05
BG		15.0	±0.4	6.0	+0/-0.5	12.0	+0/-0.5	18.0	+0/-0.5	0.8	±0.05
BI	High Profile	15.0	±0.4	6.0	+0/-0.5	17.5	+0/-0.5	18.0	+0/-0.5	0.8	±0.05
BK		15.0	±0.4	7.5	+0/-0.5	13.5	+0/-0.5	18.0	+0/-0.5	0.8	±0.05
BO	High Profile	15.0	±0.4	7.5	+0/-0.5	18.5	+0/-0.5	18.0	+0/-0.5	0.8	±0.05
BP		15.0	±0.4	8.5	+0/-0.5	14.5	+0/-0.5	18.0	+0/-0.5	0.8	±0.05
BT		15.0	±0.4	9.0	+0/-0.5	12.5	+0/-0.5	18.0	+0/-0.5	0.8	±0.05
BS		15.0	±0.4	10.0	+0/-0.5	16.0	+0/-0.5	18.0	+0/-0.5	0.8	±0.05
BY		15.0	±0.4	11.0	+0/-0.5	19.0	+0/-0.5	18.0	+0/-0.5	0.8	±0.05
BZ	Special Version	15.0	±0.4	12.0	+0/-0.5	20.0	+0/-0.5	18.0	+0/-0.5	0.8	±0.05
BR	Low Profile	15.0	±0.4	13.0	+0/-0.5	12.0	+0/-0.5	18.0	+0/-0.5	0.8	±0.05
DB		22.5	±0.4	6.0	+0/-0.5	14.5	+0/-0.5	26.0	+0/-0.5	0.8	±0.05
DI		22.5	±0.4	7.0	+0/-0.5	16.0	+0/-0.5	26.0	+0/-0.5	0.8	±0.05
DH		22.5	±0.4	8.0	+0/-0.5	16.0	+0/-0.5	26.0	+0/-0.5	0.8	±0.05
DJ		22.5	±0.4	8.5	+0/-0.5	17.0	+0/-0.5	26.0	+0/-0.5	0.8	±0.05
DM		22.5	±0.4	9.0	+0/-0.5	18.5	+0/-0.5	26.0	+0/-0.5	0.8	±0.05

Note: See Ordering Options Table for lead length (LL) options.

Downloaded from Arrow.com.

Dimensions – Millimeters cont.

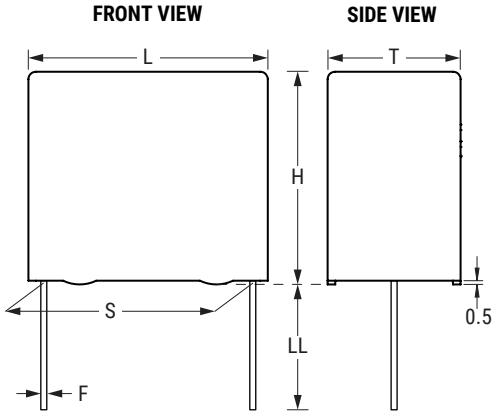

Size Code	Version	S		T		H		L		F	
		Nominal	Tolerance	Nominal	Tolerance	Nominal	Tolerance	Nominal	Tolerance	Nominal	Tolerance
DO		22.5	±0.4	10.0	+0/-0.5	18.5	+0/-0.5	26.0	+0/-0.5	0.8	±0.05
DP		22.5	±0.4	11.0	+0/-0.5	20.0	+0/-0.5	26.0	+0/-0.5	0.8	±0.05
DU		22.5	±0.4	13.0	+0/-0.5	22.0	+0/-0.5	26.0	+0/-0.5	0.8	±0.05
DY		22.5	±0.4	15.5	+0/-0.5	24.5	+0/-0.5	26.0	+0/-0.5	0.8	±0.05
FB		27.5	±0.4	9.0	+0/-0.7	17.0	+0/-0.7	31.5	+0/-0.7	0.8	±0.05
FC		27.5	±0.4	11.0	+0/-0.7	20.0	+0/-0.7	31.5	+0/-0.7	0.8	±0.05
FI		27.5	±0.4	13.0	+0/-0.7	25.0	+0/-0.7	31.5	+0/-0.7	0.8	±0.05
FN		27.5	±0.4	14.0	+0/-0.7	28.0	+0/-0.7	31.5	+0/-0.7	0.8	±0.05
FO	High Profile	27.5	±0.4	17.0	+0/-0.7	40.0	+0/-0.7	31.5	+0/-0.7	0.8	±0.05
FR		27.5	±0.4	17.5	+0/-0.7	28.0	+0/-0.7	31.5	+0/-0.7	0.8	±0.05
FS		27.5	±0.4	19.0	+0/-0.7	29.0	+0/-0.7	31.5	+0/-0.7	0.8	±0.05
FY		27.5	±0.4	22.0	+0/-0.7	37.0	+0/-0.7	31.5	+0/-0.7	0.8	±0.05
FH	Low Profile	27.5	±0.4	21.0	+0/-0.7	12.5	+0/-0.7	31.5	+0/-0.7	0.8	±0.05
FQ	Low Profile	27.5	±0.4	27.5	+0/-0.7	16.0	+0/-0.7	31.5	+0/-0.7	0.8	±0.05
FT	Low Profile	27.5	±0.4	31.0	+0/-0.7	19.0	+0/-0.7	31.5	+0/-0.7	0.8	±0.05
RB		37.5	±0.4	11.0	+0/-0.7	22.0	+0/-0.7	41.0	+0/-0.7	1	±0.05
RF		37.5	±0.4	13.0	+0/-0.7	24.0	+0/-0.7	41.0	+0/-0.7	1	±0.05
RH		37.5	±0.4	15.0	+0/-0.7	26.0	+0/-0.7	41.0	+0/-0.7	1	±0.05
RC		37.5	±0.4	16.0	+0/-0.7	28.5	+0/-0.7	41.0	+0/-0.7	1	±0.05
RD		37.5	±0.4	19.0	+0/-0.7	32.0	+0/-0.7	41.0	+0/-0.7	1	±0.05
RP		37.5	±0.4	21.0	+0/-0.7	38.0	+0/-0.7	41.0	+0/-0.7	1	±0.05
RO		37.5	±0.4	24.0	+0/-0.7	44.0	+0/-0.7	41.0	+0/-0.7	1	±0.05
RU		37.5	±0.4	30.0	+0/-0.7	45.0	+0/-0.7	41.0	+0/-0.7	1	±0.05
RV	Low Profile	37.5	±0.4	24.0	+0/-0.7	15.0	+0/-0.7	41.0	+0/-0.7	1	±0.05
RW	Low Profile	37.5	±0.4	24.0	+0/-0.7	19.0	+0/-0.7	41.0	+0/-0.7	1	±0.05

Note: See Ordering Options Table for lead length (LL) options.

Downloaded from Arrow.com.

Performance Characteristics

Rated Voltage	310 VAC 50/60 Hz			
Capacitance Range	0.01 – 4.7 µF			
Capacitance Tolerance	±20%, ±10%			
Operating Temperature Range	−40°C to +110°C			
Rated Temperature	+110°C			
Climatic Category	40/110/56			
Storage Conditions	Storage time: ≤ 24 months from the date marked on the label package Average relative humidity per year ≤ 70% RH ≤ 85% for 30 days randomly distributed throughout the year Dew is absent Temperature: -40 to 80°C (see "Maximum Humidity in Storage Conditions" graph below)			
Approvals	ENEC, UL, cUL, CQC			
Dissipation Factor	Maximum Values at +23°C			
		C≤0.1µF	C>0.1µF	
	1 kHz	0.3%	0.2%	
Test Voltage Between Terminals	The 100% screening factory test is carried out at 1,900 VDC. The voltage level is selected to meet the requirements in applicable equipment standards. All electrical characteristics are checked after the test. It's not permitted to repeat this Test as there is a risk to damage the Capacitor. KEMET is not liable in such case for any failures			
Insulation Resistance	Measured at +25°C ±5°C, according to IEC 60384-2			
	Minimum Values Between Terminals			
	Voltage Charge	Voltage Charge time	C ≤ 0.33 µF	C > 0.33 µF
	100 VDC	1 minute	≥ 3 • 10^4 MΩ	≥ 10,000 MΩ • µF
In DC Applications	Recommended voltage ≤ 630 VDC			

Downloaded from Arrow.com.

Performance Characteristics cont.

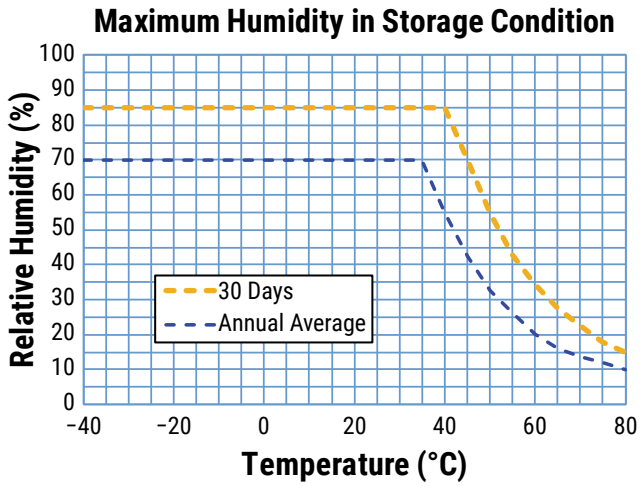

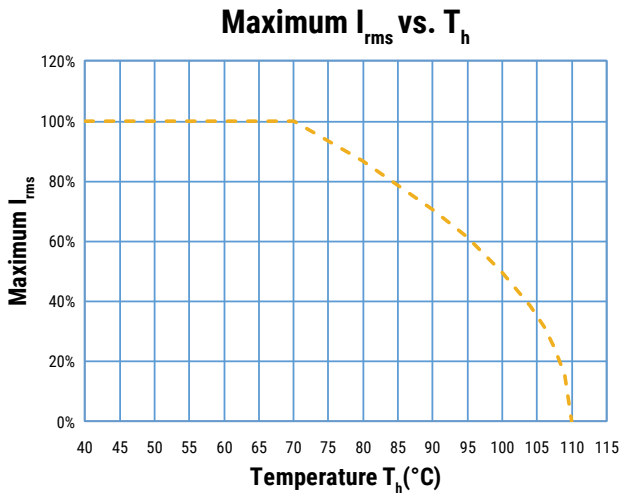

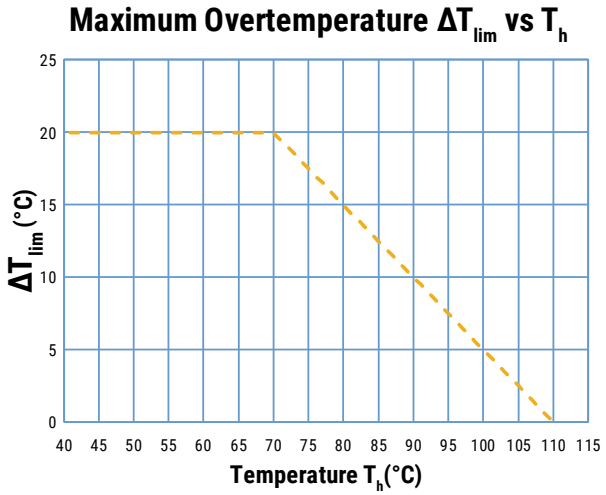

T_h is the maximum ambient temperature surrounding the capacitor or hottest contact point (e.g. tracks), whichever is higher, in the worst operation conditions in °C.

Downloaded from Arrow.com.

Maximum Voltage (V_{rms}) Versus Frequency (Sinusoidal Waveform/Th ≤ 70°C)

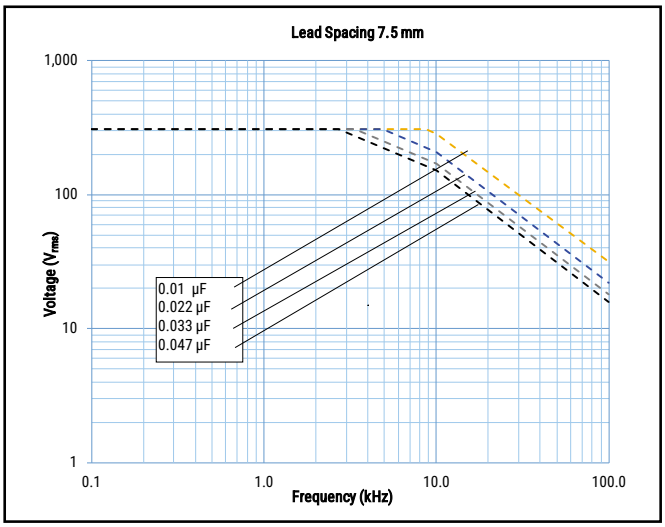

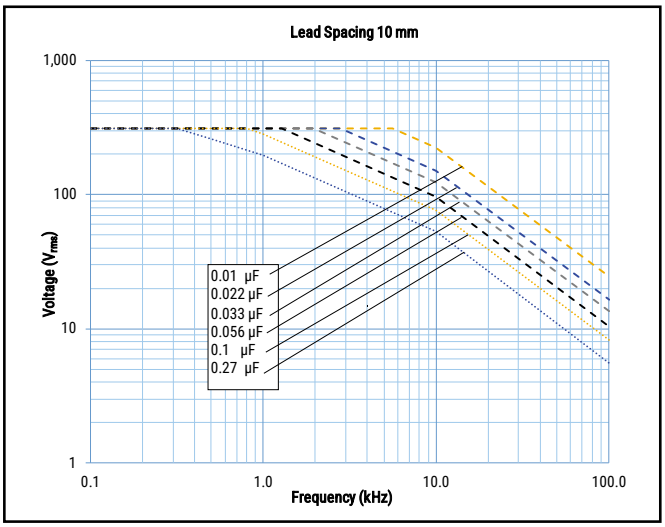

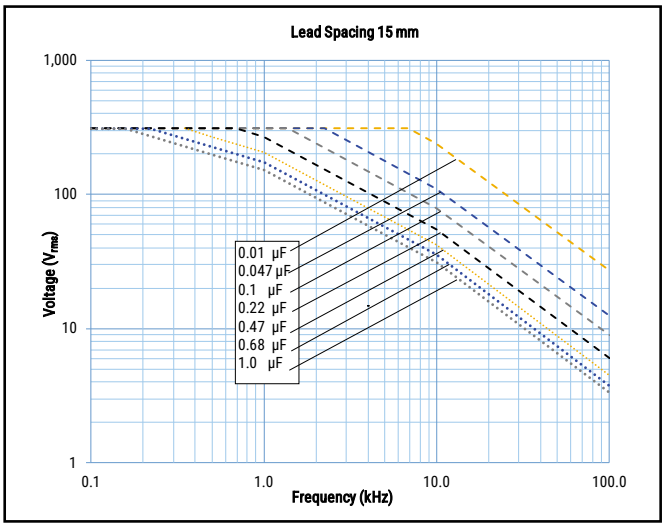

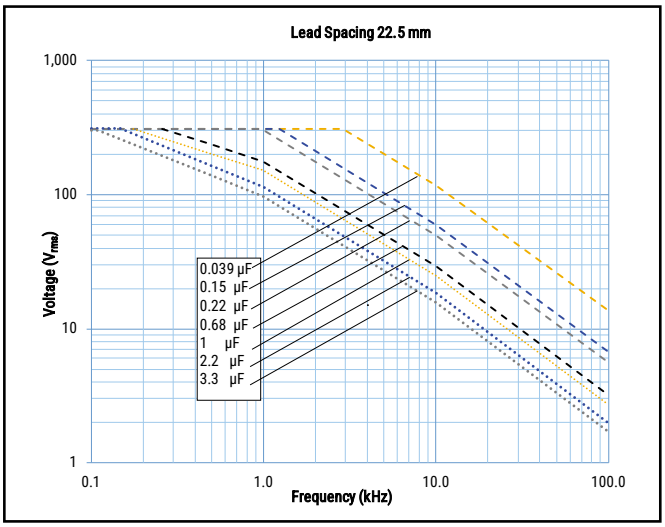

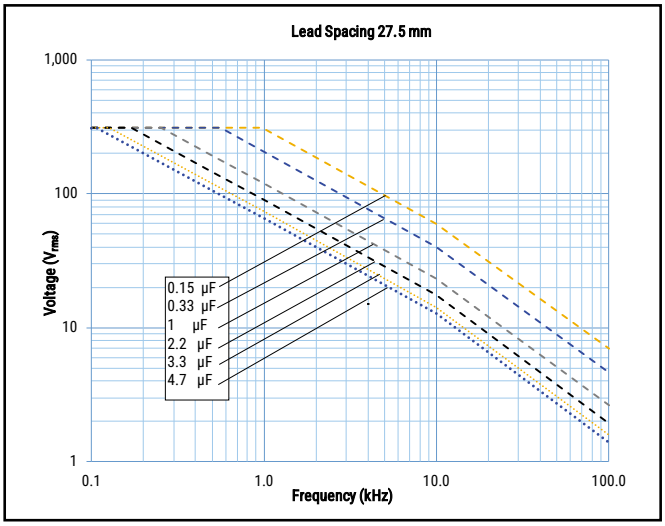

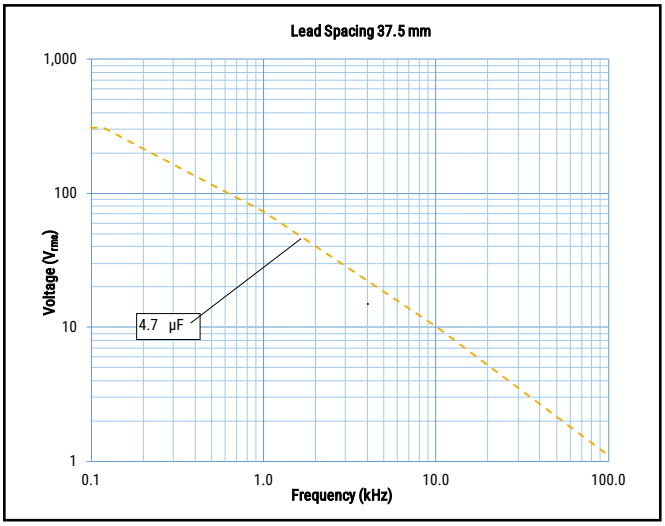

Downloaded from Arrow.com.

Maximum Current (A_{rms}) Versus Frequency (Sinusoidal Waveform/Th ≤ 70°C)

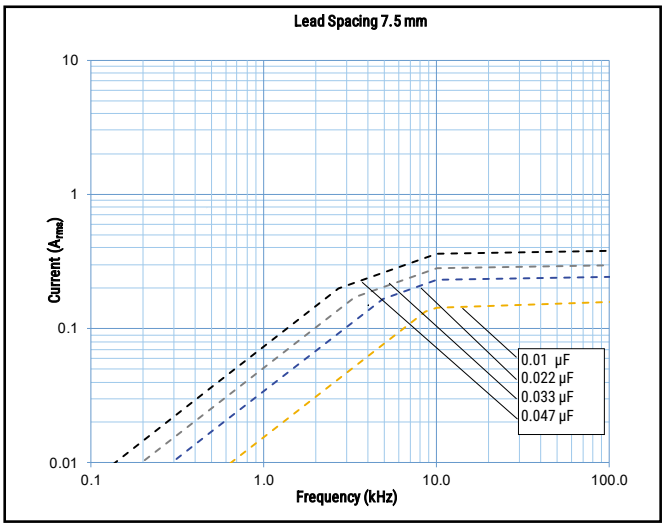

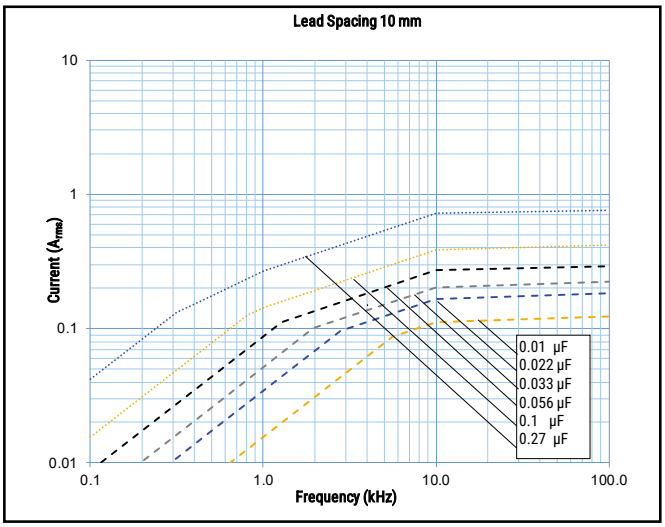

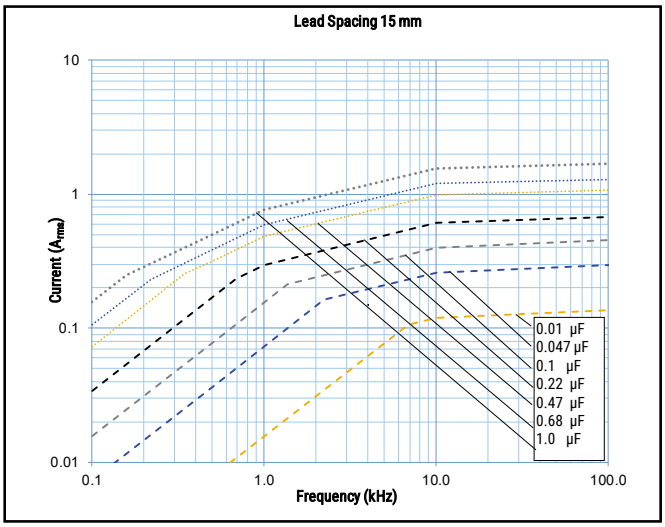

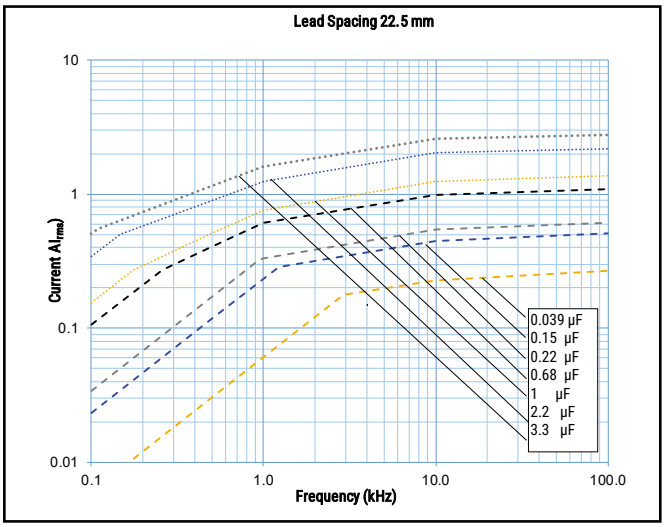

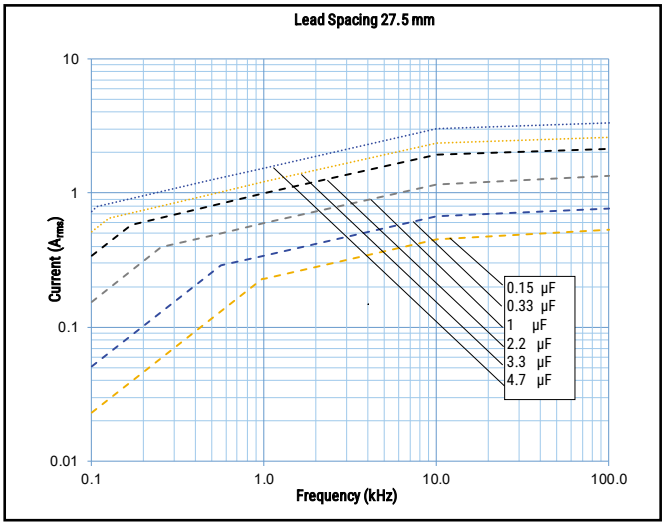

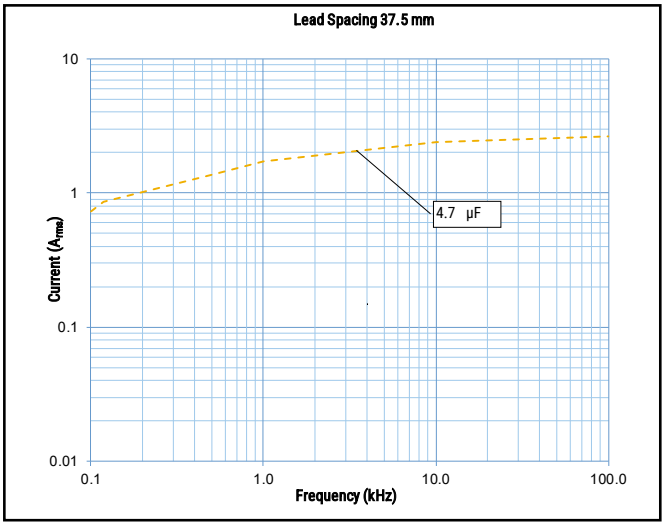

Downloaded from Arrow.com.

Impedance Graph

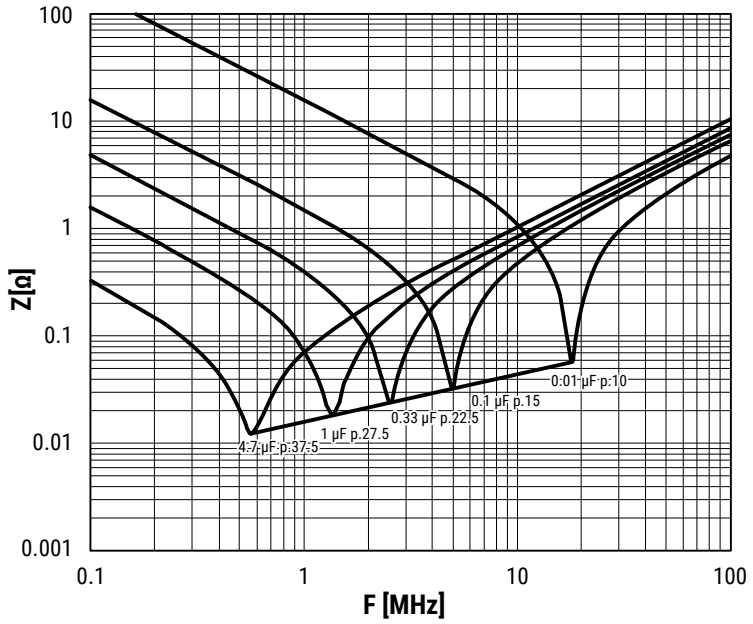

Environmental Test Data

Test	IEC Publication	Procedure
Endurance	IEC 60384–14	1.25 x V_R VAC 50 Hz, once every hour increase to 1,000 VAC for 0.1 second, 1,000 hours at upper rated temperature
Vibration	IEC 60068–2–6 Test Fc	3 directions at 2 hours each 10 – 55 Hz at 0.75 mm or 98 m/s^2
Bump	IEC 60068–2–29 Test Eb	1,000 bumps at 390 m/s^2
Change of Temperature	IEC 60068–2–14 Test Na	Upper and lower rated temperature 5 cycles
Active Flammability	IEC 60384–14	V_R +20 surge pulses at 2.5 kV (pulse every 5 seconds)
Passive Flammability	IEC 60384–14	IEC 60384–1, IEC 60695–11–5 Needle-flame test
Damp Heat Steady State	IEC 60068–2–78 Test Cab	+40°C and 93% RH, 56 days
Biased Humidity	IEC 60384-14:2023 Edition 5	+40°C and 93% RH, Rated Voltage, 21 days

Downloaded from Arrow.com.

Approvals

Certification Body	Mark	Specification	File Number
IMQ S.p.A.		EN/IEC 60384-14	CA08.00189
UL		UL 60384-14 and CAN/CSA-E60384-14	E97797
CQC		IEC 60384-14	CQC12001084206 CQC12001084386 CQC12001084205 CQC12001084204 CQC12001084207

Environmental Compliance

All new KEMET EMI capacitors are RoHS compliant and Halogen-Free.

Downloaded from Arrow.com.

Table 1 – Ratings & Part Number Reference

Capacitance Value (µF)	Size Code	Maximum Dimensions in mm			Lead Spacing (S)	dV/dt (V/µs)	Part Number
		T	H	L			
0.01	KG	4.0	8.0	10.0	7.5	500	F861KG103(1)310(2)
0.012	KG	4.0	8.0	10.0	7.5	500	F861KG123(1)310(2)
0.015	KH	4.0	9.0	10.0	7.5	500	F861KH153(3)310(2)
0.018	KJ	5.0	10.5	10.0	7.5	500	F861KJ183(1)310(2)
0.022	KJ	5.0	10.5	10.0	7.5	500	F861KJ223(1)310(2)
0.025	KJ	5.0	10.5	10.0	7.5	500	F861KJ253(1)310(2)
0.027	KJ	5.0	10.5	10.0	7.5	500	F861KJ273(1)310(2)
0.033	KJ	5.0	10.5	10.0	7.5	500	F861KJ333(3)310(2)
0.033	KM	6.0	12.0	10.5	7.5	500	F861KM333(1)310(2)
0.039	KM	6.0	12.0	10.5	7.5	500	F861KM393(1)310(2)
0.047	KM	6.0	12.0	10.5	7.5	500	F861KM473(3)310(2)
0.01	AE	4.0	8.0	13.0	10.0	500	F861AE103(1)310(2)
0.01	AL	9.5	7.5	13.0	10.0	500	F861AL103(1)310(2)
0.012	AE	4.0	8.0	13.0	10.0	500	F861AE123(1)310(2)
0.015	AE	4.0	8.0	13.0	10.0	500	F861AE153(1)310(2)
0.015	AL	9.5	7.5	13.0	10.0	500	F861AL153(1)310(2)
0.018	AE	4.0	8.0	13.0	10.0	500	F861AE183(1)310(2)
0.018	AL	9.5	7.5	13.0	10.0	500	F861AL183(1)310(2)
0.022	AE	4.0	8.0	13.0	10.0	500	F861AE223(1)310(2)
0.022	AL	9.5	7.5	13.0	10.0	500	F861AL223(1)310(2)
0.025	AE	4.0	8.0	13.0	10.0	500	F861AE253(1)310(2)
0.025	AL	9.5	7.5	13.0	10.0	500	F861AL253(1)310(2)
0.027	AE	4.0	8.0	13.0	10.0	500	F861AE273(1)310(2)
0.027	AL	9.5	7.5	13.0	10.0	500	F861AL273(1)310(2)
0.033	AE	4.0	8.0	13.0	10.0	500	F861AE333(1)310(2)
0.033	AL	9.5	7.5	13.0	10.0	500	F861AL333(1)310(2)
0.039	AE	4.0	8.0	13.0	10.0	500	F861AE393(1)310(2)
0.039	AL	9.5	7.5	13.0	10.0	500	F861AL393(1)310(2)
0.047	AE	4.0	8.0	13.0	10.0	500	F861AE473(3)310(2)
0.047	AL	9.5	7.5	13.0	10.0	500	F861AL473(1)310(2)
0.056	AG	4.0	9.0	13.0	10.0	500	F861AG563(1)310(2)
0.056	AL	9.5	7.5	13.0	10.0	500	F861AL563(1)310(2)
0.068	AK	5.0	11.0	13.0	10.0	500	F861AK683(1)310(2)
0.068	AL	9.5	7.5	13.0	10.0	500	F861AL683(1)310(2)
0.082	AK	5.0	11.0	13.0	10.0	500	F861AK823(1)310(2)
0.082	AL	9.5	7.5	13.0	10.0	500	F861AL823(1)310(2)
0.1	AK	5.0	11.0	13.0	10.0	500	F861AK104(3)310(2)
0.1	AL	9.5	7.5	13.0	10.0	500	F861AL104(1)310(2)
0.1	AP	6.0	12.0	13.0	10.0	500	F861AP104(1)310(2)
0.12	AL	9.5	7.5	13.0	10.0	500	F861AL124(1)310(2)
0.12	AP	6.0	12.0	13.0	10.0	500	F861AP124(1)310(2)
0.15	AO	7.0	17.0	13.0	10.0	500	F861AO154(1)310(2)
0.15	AP	6.0	12.0	13.0	10.0	500	F861AP154(3)310(2)
0.18	AO	7.0	17.0	13.0	10.0	500	F861AO184(1)310(2)
0.22	AO	7.0	17.0	13.0	10.0	500	F861AO224(1)310(2)
0.25	AO	7.0	17.0	13.0	10.0	500	F861AO254(1)310(2)
0.27	AO	7.0	17.0	13.0	10.0	500	F861AO274(1)310(2)
0.01	BB	4.0	10.0	18.0	15.0	400	F861BB103(1)310(2)
0.012	BB	4.0	10.0	18.0	15.0	400	F861BB123(1)310(2)
0.015	BB	4.0	10.0	18.0	15.0	400	F861BB153(1)310(2)
0.018	BB	4.0	10.0	18.0	15.0	400	F861BB183(1)310(2)
0.022	BB	4.0	10.0	18.0	15.0	400	F861BB223(1)310(2)
0.025	BB	4.0	10.0	18.0	15.0	400	F861BB253(1)310(2)
0.027	BB	4.0	10.0	18.0	15.0	400	F861BB273(1)310(2)
0.033	BB	4.0	10.0	18.0	15.0	400	F861BB333(1)310(2)
0.039	BB	4.0	10.0	18.0	15.0	400	F861BB393(1)310(2)
0.047	BB	4.0	10.0	18.0	15.0	400	F861BB473(1)310(2)
0.056	BB	4.0	10.0	18.0	15.0	400	F861BB563(1)310(2)
0.068	BB	4.0	10.0	18.0	15.0	400	F861BB683(1)310(2)
Capacitance Value (µF)	**Size Code**	**T (mm)**	**H (mm)**	**L (mm)**	**Lead Spacing (S)**	**dV/dt (V/µs)**	**Part Number**

(1) M = ±20%, K = ±10%.
(2) Insert lead and packaging code. See Ordering Options Table for available options.
(3) M = ±20% (only available tolerance).

Downloaded from Arrow.com.

Table 1 – Ratings & Part Number Reference cont.

Capacitance Value (µF)	Size Code	Maximum Dimensions in mm			Lead Spacing (S)	dV/dt (V/µs)	Part Number
		T	H	L			
0.082	BB	4.0	10.0	18.0	15.0	400	F861BB823(1)310(2)
0.1	BB	4.0	10.0	18.0	15.0	400	F861BB104(1)310(2)
0.12	BB	4.0	10.0	18.0	15.0	400	F861BB124(3)310(2)
0.12	BC	5.0	11.0	18.0	15.0	400	F861BC124(1)310(2)
0.15	BC	5.0	11.0	18.0	15.0	400	F861BC154(1)310(2)
0.15	BT	9.0	12.5	18.0	15.0	400	F861BT154(1)310(2)
0.18	BC	5.0	11.0	18.0	15.0	400	F861BC184(3)310(2)
0.18	BE	5.5	12.5	18.0	15.0	400	F861BE184(1)310(2)
0.18	BT	9.0	12.5	18.0	15.0	400	F861BT184(1)310(2)
0.22	BE	5.5	12.5	18.0	15.0	400	F861BE224(1)310(2)
0.22	BG	6.0	12.0	18.0	15.0	400	F861BG224(1)310(2)
0.22	BT	9.0	12.5	18.0	15.0	400	F861BT224(1)310(2)
0.25	BG	6.0	12.0	18.0	15.0	400	F861BG254(1)310(2)
0.25	BT	9.0	12.5	18.0	15.0	400	F861BT254(1)310(2)
0.27	BG	6.0	12.0	18.0	15.0	400	F861BG274(3)310(2)
0.27	BI	6.0	17.5	18.0	15.0	400	F861BI274(1)310(2)
0.27	BK	7.5	13.5	18.0	15.0	400	F861BK274(1)310(2)
0.27	BR	13.0	12.0	18.0	15.0	400	F861BR274(1)310(2)
0.27	BT	9.0	12.5	18.0	15.0	400	F861BT274(1)310(2)
0.33	BI	6.0	17.5	18.0	15.0	400	F861BI334(1)310(2)
0.33	BK	7.5	13.5	18.0	15.0	400	F861BK334(1)310(2)
0.33	BR	13.0	12.0	18.0	15.0	400	F861BR334(1)310(2)
0.33	BT	9.0	12.5	18.0	15.0	400	F861BT334(1)310(2)
0.39	BI	6.0	17.5	18.0	15.0	400	F861BI394(1)310(2)
0.39	BK	7.5	13.5	18.0	15.0	400	F861BK394(3)310(2)
0.39	BP	8.5	14.5	18.0	15.0	400	F861BP394(1)310(2)
0.39	BR	13.0	12.0	18.0	15.0	400	F861BR394(1)310(2)
0.39	BT	9.0	12.5	18.0	15.0	400	F861BT394(1)310(2)
0.47	BO	7.5	18.5	18.0	15.0	400	F861BO474(1)310(2)
0.47	BP	8.5	14.5	18.0	15.0	400	F861BP474(1)310(2)
0.47	BR	13.0	12.0	18.0	15.0	400	F861BR474(1)310(2)
0.56	BO	7.5	18.5	18.0	15.0	400	F861BO564(1)310(2)
0.56	BR	13.0	12.0	18.0	15.0	400	F861BR564(1)310(2)
0.56	BS	10.0	16.0	18.0	15.0	400	F861BS564(1)310(2)
0.68	BR	13.0	12.0	18.0	15.0	400	F861BR684(3)310(2)
0.68	BS	10.0	16.0	18.0	15.0	400	F861BS684(1)310(2)
0.82	BY	11.0	19.0	18.0	15.0	400	F861BY824(1)310(2)
1	BZ	12.0	20.0	18.0	15.0	400	F861BZ105(3)310(2)
0.039	DB	6.0	14.5	26.0	22.5	200	F861DB393(1)310(2)
0.047	DB	6.0	14.5	26.0	22.5	200	F861DB473(1)310(2)
0.056	DB	6.0	14.5	26.0	22.5	200	F861DB563(1)310(2)
0.068	DB	6.0	14.5	26.0	22.5	200	F861DB683(1)310(2)
0.082	DB	6.0	14.5	26.0	22.5	200	F861DB823(1)310(2)
0.1	DB	6.0	14.5	26.0	22.5	200	F861DB104(1)310(2)
0.12	DB	6.0	14.5	26.0	22.5	200	F861DB124(1)310(2)
0.15	DB	6.0	14.5	26.0	22.5	200	F861DB154(1)310(2)
0.18	DB	6.0	14.5	26.0	22.5	200	F861DB184(1)310(2)
0.22	DB	6.0	14.5	26.0	22.5	200	F861DB224(1)310(2)
0.25	DB	6.0	14.5	26.0	22.5	200	F861DB254(1)310(2)
0.27	DB	6.0	14.5	26.0	22.5	200	F861DB274(1)310(2)
0.33	DB	6.0	14.5	26.0	22.5	200	F861DB334(1)310(2)
0.39	DB	6.0	14.5	26.0	22.5	200	F861DB394(1)310(2)
0.47	DB	6.0	14.5	26.0	22.5	200	F861DB474(3)310(2)
0.47	DI	7.0	16.0	26.0	22.5	200	F861DI474(1)310(2)
0.56	DI	7.0	16.0	26.0	22.5	200	F861DI564(1)310(2)
0.68	DI	7.0	16.0	26.0	22.5	200	F861DI684(1)310(2)
0.82	DH	8.0	16.0	26.0	22.5	200	F861DH824(1)310(2)
1	DJ	8.5	17.0	26.0	22.5	200	F861DJ105(3)310(2)
1.2	DM	9.0	18.5	26.0	22.5	200	F861DM125(3)310(2)
Capacitance Value (µF)	**Size Code**	**T (mm)**	**H (mm)**	**L (mm)**	**Lead Spacing (S)**	**dV/dt (V/µs)**	**Part Number**

(1) M = ±20%, K = ±10%.
(2) Insert lead and packaging code. See Ordering Options Table for available options.
(3) M = ±20% (only available tolerance).

Downloaded from Arrow.com.

Table 1 – Ratings & Part Number Reference cont.

Capacitance Value (µF)	Size Code	Maximum Dimensions in mm			Lead Spacing (S)	dV/dt (V/µs)	Part Number
		T	H	L			
1.2	DO	10.0	18.5	26.0	22.5	200	F861DO125(1)310(2)
1.5	DP	11.0	20.0	26.0	22.5	200	F861DP155(1)310(2)
1.8	DP	11.0	20.0	26.0	22.5	200	F861DP185(3)310(2)
1.8	DU	13.0	22.0	26.0	22.5	200	F861DU185(1)310(2)
2.2	DU	13.0	22.0	26.0	22.5	200	F861DU225(1)310(2)
2.5	DU	13.0	22.0	26.0	22.5	200	F861DU255(3)310(2)
2.5	DY	15.5	24.5	26.0	22.5	200	F861DY255(1)310(2)
2.7	DY	15.5	24.5	26.0	22.5	200	F861DY275(1)310(2)
3.3	DY	15.5	24.5	26.0	22.5	200	F861DY335(3)310(2)
0.15	FB	9.0	17.0	31.5	27.5	150	F861FB154(1)310(2)
0.18	FB	9.0	17.0	31.5	27.5	150	F861FB184(1)310(2)
0.22	FB	9.0	17.0	31.5	27.5	150	F861FB224(1)310(2)
0.25	FB	9.0	17.0	31.5	27.5	150	F861FB254(1)310(2)
0.25	FH	21.0	12.5	31.5	27.5	150	F861FH254(1)310(2)
0.27	FB	9.0	17.0	31.5	27.5	150	F861FB274(1)310(2)
0.27	FH	21.0	12.5	31.5	27.5	150	F861FH274(1)310(2)
0.33	FB	9.0	17.0	31.5	27.5	150	F861FB334(1)310(2)
0.33	FH	21.0	12.5	31.5	27.5	150	F861FH334(1)310(2)
0.39	FB	9.0	17.0	31.5	27.5	150	F861FB394(1)310(2)
0.39	FH	21.0	12.5	31.5	27.5	150	F861FH394(1)310(2)
0.47	FB	9.0	17.0	31.5	27.5	150	F861FB474(1)310(2)
0.47	FH	21.0	12.5	31.5	27.5	150	F861FH474(1)310(2)
0.56	FB	9.0	17.0	31.5	27.5	150	F861FB564(1)310(2)
0.56	FH	21.0	12.5	31.5	27.5	150	F861FH564(1)310(2)
0.68	FB	9.0	17.0	31.5	27.5	150	F861FB684(1)310(2)
0.68	FH	21.0	12.5	31.5	27.5	150	F861FH684(1)310(2)
0.82	FB	9.0	17.0	31.5	27.5	150	F861FB824(1)310(2)
0.82	FH	21.0	12.5	31.5	27.5	150	F861FH824(1)310(2)
1	FB	9.0	17.0	31.5	27.5	150	F861FB105(1)310(2)
1	FH	21.0	12.5	31.5	27.5	150	F861FH105(1)310(2)
1.2	FB	9.0	17.0	31.5	27.5	150	F861FB125(3)310(2)
1.2	FC	11.0	20.0	31.5	27.5	150	F861FC125(1)310(2)
1.2	FH	21.0	12.5	31.5	27.5	150	F861FH125(1)310(2)
1.5	FC	11.0	20.0	31.5	27.5	150	F861FC155(1)310(2)
1.5	FH	21.0	12.5	31.5	27.5	150	F861FH155(1)310(2)
1.8	FC	11.0	20.0	31.5	27.5	150	F861FC185(3)310(2)
1.8	FH	21.0	12.5	31.5	27.5	150	F861FH185(1)310(2)
2.2	FH	21.0	12.5	31.5	27.5	150	F861FH225(3)310(2)
2.2	FI	13.0	25.0	31.5	27.5	150	F861FI225(1)310(2)
2.5	FI	13.0	25.0	31.5	27.5	150	F861FI255(1)310(2)
2.5	FQ	27.5	16.0	31.5	27.5	150	F861FQ255(1)310(2)
2.7	FI	13.0	25.0	31.5	27.5	150	F861FI275(1)310(2)
2.7	FQ	27.5	16.0	31.5	27.5	150	F861FQ275(1)310(2)
3.3	FI	13.0	25.0	31.5	27.5	150	F861FI335(3)310(2)
3.3	FN	14.0	28.0	31.5	27.5	150	F861FN335(1)310(2)
3.3	FO	17.0	40.0	31.5	27.5	150	F861FO335(1)310(2)
3.3	FQ	27.5	16.0	31.5	27.5	150	F861FQ335(1)310(2)
3.9	FO	17.0	40.0	31.5	27.5	150	F861FO395(1)310(2)
3.9	FQ	27.5	16.0	31.5	27.5	150	F861FQ395(3)310(2)
3.9	FR	17.5	28.0	31.5	27.5	150	F861FR395(1)310(2)
3.9	FT	31.0	19.0	31.5	27.5	150	F861FT395(1)310(2)
4.7	FO	17.0	40.0	31.5	27.5	150	F861FO475(1)310(2)
4.7	FR	17.5	28.0	31.5	27.5	150	F861FR475(1)310(2)
4.7	FT	31.0	19.0	31.5	27.5	150	F861FT475(1)310(2)
4.7	RF	13.0	24.0	41.0	37.5	100	F861RF475(3)310(2)
4.7	RH	15.0	26.0	41.0	37.5	100	F861RH475(1)310(2)
4.7	RV	24.0	15.0	41.0	37.5	100	F861RV475(3)310(2)
4.7	RW	24.0	19.0	41.0	37.5	100	F861RW475(1)310(2)
Capacitance Value (µF)	**Size Code**	**T (mm)**	**H (mm)**	**L (mm)**	**Lead Spacing (S)**	**dV/dt (V/µs)**	**Part Number**

(1) M = ±20%, K = ±10%.
(2) Insert lead and packaging code. See Ordering Options Table for available options.
(3) M = ±20% (only available tolerance).

Downloaded from Arrow.com.

Soldering Process

The implementation of the RoHS directive has resulted in the selection of SnAgCu (SAC) alloys or SnCu alloys as primary solder. This has increased the liquidus temperature from that of 183ºC for SnPb eutectic alloy to 217 – 221°C for the new alloys. As a result, the heat stress to the components, even in wave soldering, has increased considerably due to higher pre-heat and wave temperatures. Polypropylene capacitors are especially sensitive to heat (the melting point of polypropylene is 160 – 170°C). Wave soldering can be destructive, especially for mechanically small polypropylene capacitors (with lead spacing of 5 – 15 mm), and great care has to be taken during soldering. The recommended solder profiles from KEMET should be used. Please consult KEMET with any questions. In general, the wave soldering curve from IEC Publication 61760–1 Edition 2 serves as a solid guideline for successful soldering. Please see Figure 1.

Reflow soldering is not recommended for through-hole film capacitors. Exposing capacitors to a soldering profile in excess of the above the recommended limits may result to degradation or permanent damage to the capacitors.

Do not place the polypropylene capacitor through an adhesive curing oven to cure resin for surface mount components. Insert through-hole parts after the curing of surface mount parts. Consult KEMET to discuss the actual temperature profile in the oven, if through-hole components must pass through the adhesive curing process. A maximum two soldering cycles is recommended. Please allow time for the capacitor surface temperature to return to a normal temperature before the second soldering cycle.

Manual Soldering Recommendations

Following is the recommendation for manual soldering with a soldering iron.

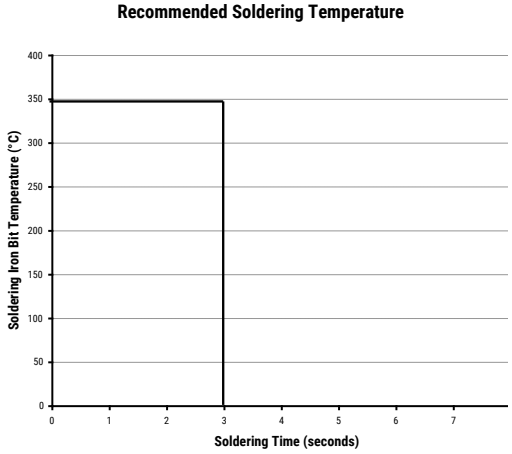

The soldering iron tip temperature should be set at 350°C (+10°C maximum), with the soldering duration not to exceed more than 3 seconds.

Wave Soldering Recommendations

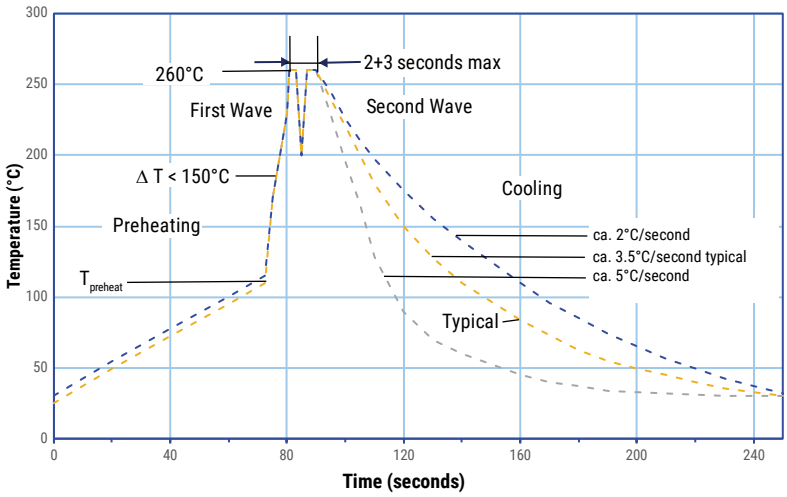

Downloaded from Arrow.com.

Soldering Process cont.

Wave Soldering Recommendations cont.

1. The table indicates the maximum set-up temperature of the soldering process
Figure 1

Dielectric Film Material	Maximum Preheat Temperature		Maximum Peak Soldering Temperature	
	Capacitor Pitch ≤ 15 mm	Capacitor Pitch > 15 mm	Capacitor Pitch ≤ 15 mm	Capacitor Pitch > 15 mm
Polyester	130°C	130°C	270°C	270°C
Polypropylene	110°C	130°C	260°C	270°C
Paper	130°C	140°C	270°C	270°C
Polyphenylene Sulphide	150°C	160°C	270°C	270°C

2. The maximum temperature measured inside the capacitor:
Set the temperature so that inside the element the maximum temperature is below the limit:

Dielectric Film Material	Maximum temperature measured inside the element
Polyester	160°C
Polypropylene	110°C
Paper	160°C
Polyphenylene Sulphide	160°C

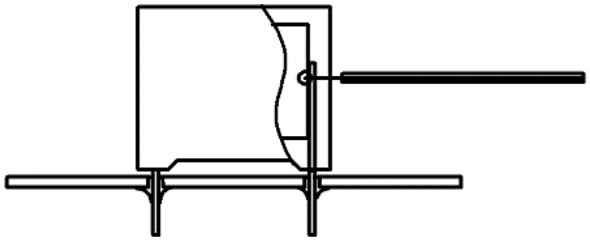

Temperature monitored inside the capacitor.

Selective Soldering Recommendations

Selective dip soldering is a variation of reflow soldering. In this method, the printed circuit board with through-hole components to be soldered is preheated and transported over the solder bath as in normal flow soldering without touching the solder. When the board is over the bath, it is stopped and pre-designed solder pots are lifted from the bath with molten solder only at the places of the selected components, and pressed against the lower surface of the board to solder the components.

The temperature profile for selective soldering is similar to the double wave flow soldering outlined in this document, **however, instead of two baths, there is only one bath with a time from 3 to 10 seconds.** In selective soldering, the risk of overheating is greater than in double wave flow soldering, and great care must be taken so that the parts are not overheated.

Downloaded from Arrow.com.

Construction

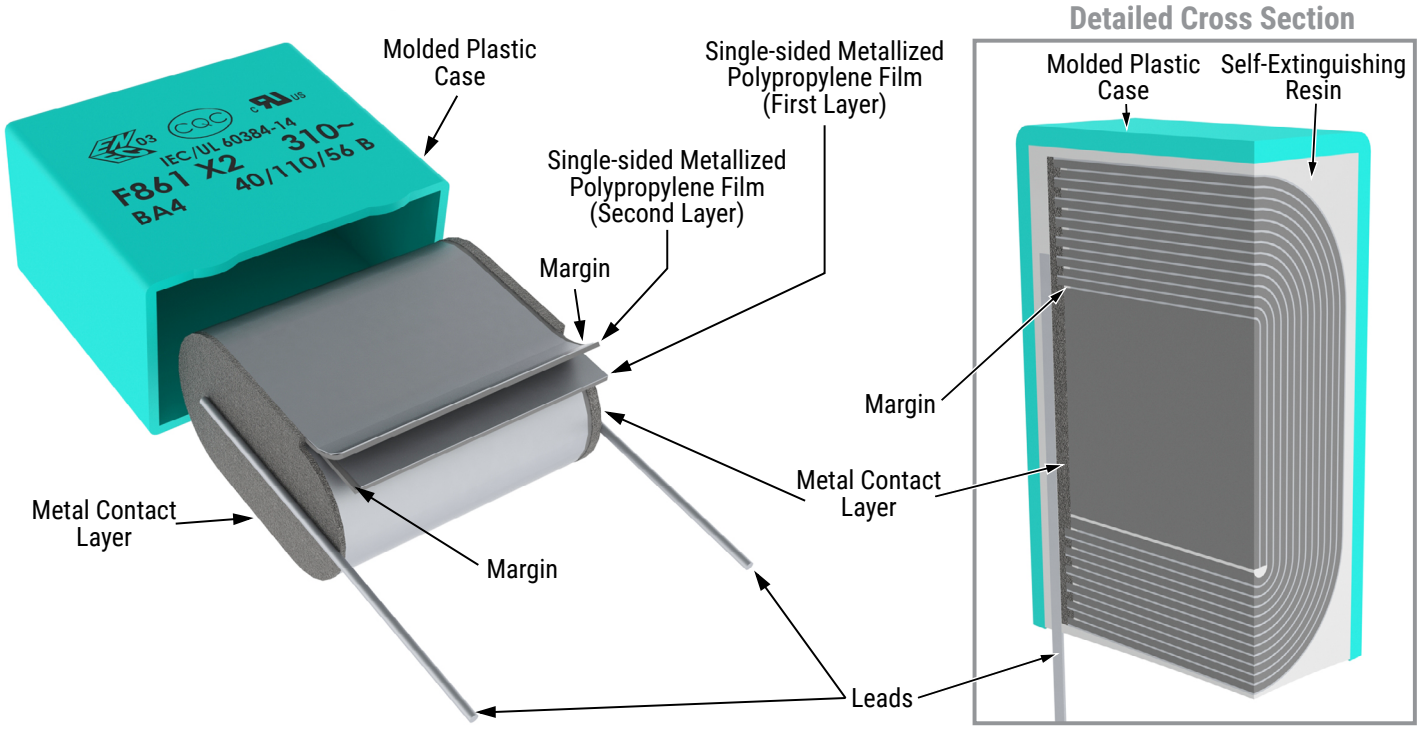

Winding Scheme

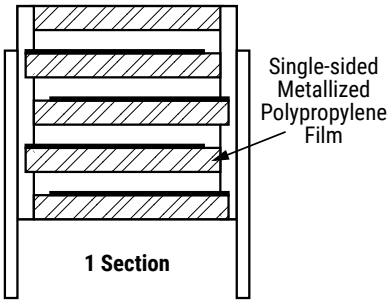

Downloaded from Arrow.com.

Marking

Pitch = 7.5 mm

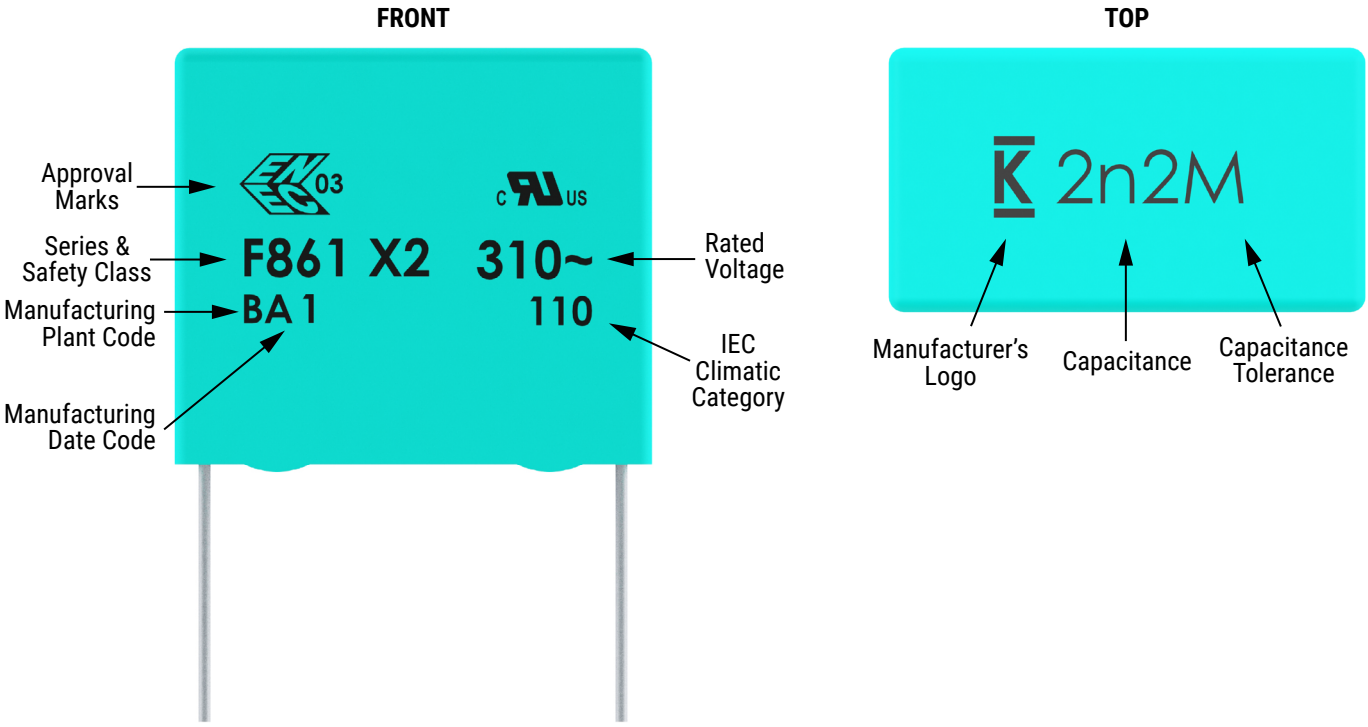

Pitch ≥ 10 mm

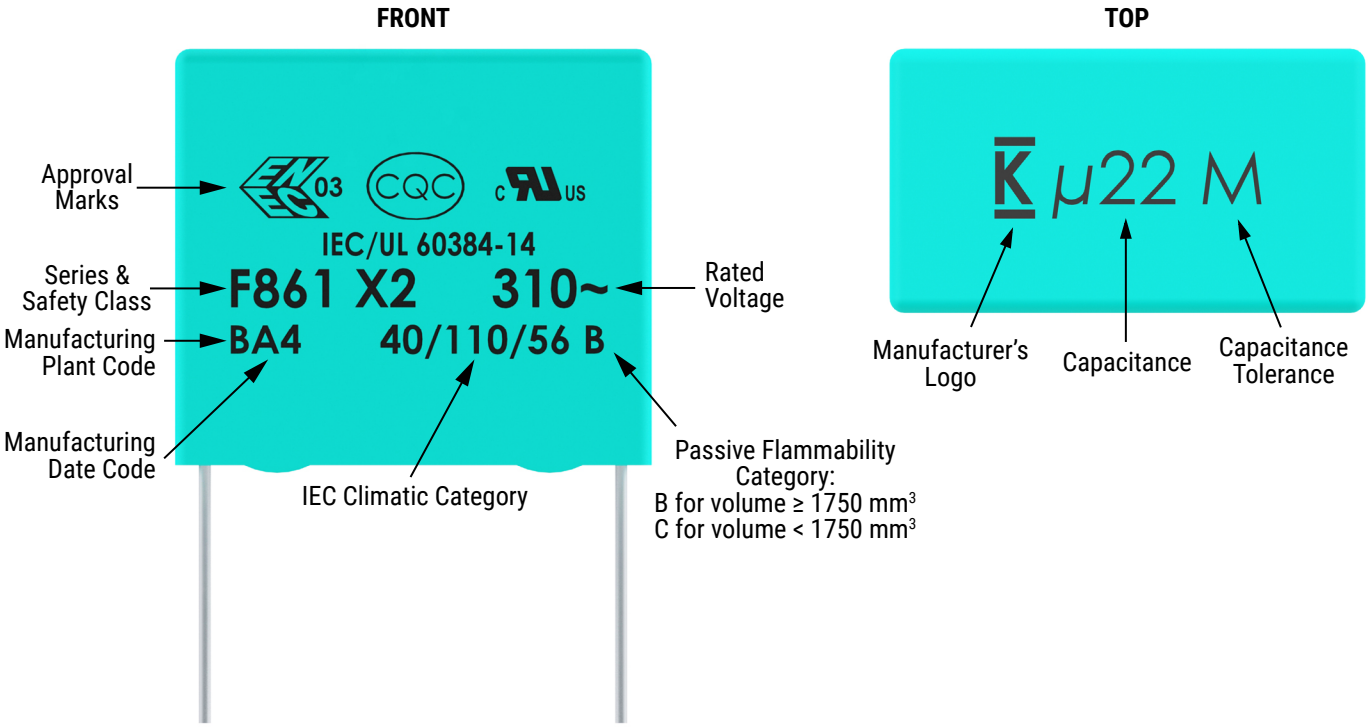

Slight change in the layout can be possible but this does not affect the content of the information of the current marking.
This change will be achieved without impact to product form, fit or function, as the products are equivalent with respect to physical, mechanical, quality and reliability characteristics.

Downloaded from Arrow.com.

Manufacturing Date Code (IEC 60062)									
Year	Code	Year	Code	Year	Code	Month	Code	Month	Code
2020	M	2027	V	2034	E	January	1	July	7
2021	N	2028	W	2035	F	February	2	August	8
2022	P	2029	X	2036	H	March	3	September	9
2023	R	2030	A	2037	J	April	4	October	O
2024	S	2031	B	2038	K	May	5	November	N
2025	T	2032	C	2039	L	June	6	December	D
2026	U	2033	D	2040	M				

Downloaded from Arrow.com.

Packaging Quantities

Size Code	Lead Spacing	Thickness (mm)	Height (mm)	Length (mm)	Bulk Short Leads	Bulk Long Leads	Standard Reel 355 mm	Large Reel 500 mm	Ammo	Pizza
KE	7.5	2.5	6	10	2,000	2,500	2,500		3,500	
KF		3	8	10	1,500	1,750	2,100		2,800	
KG		4	8	10	2,000	1,500	1,500		2,100	
KJ		5	10.5	10	1,500	1,000	1,200		1,600	
KM		6	12	10.5	1,000	800	1,000		1,350	
KH		4	9	10	2,000	1,500	1,500		2,100	
AN	10	3.5	9	13	2,000	2,200	850	1,700	1,150	
AG		4	9	13	2,000	2,200	750	1,500	1,000	
AK		5	11	13	1,300	2,000	600	1,250	800	
AP		6	12	13	1,000	1,800	500	1,000	680	
AO		7	17	13	600	700	450	900	580	
AL		9.5	7.5	13	1,000	1,500	300	600	430	
AE		4	8	13	2,000	2,200	750	1,500	1,000	
BB	15	4	10	18	2,500	1,500	750	1,500	1,000	1,411
BC		5	11	18	1,000	1,250	600	1,250	800	1,139
BE		5.5	12.5	18	800	1,000	550	1,100	750	1,020
BG		6	12	18	1,750	1,000	500	1,000	680	935
BK		7.5	13.5	18	1,000	800	350	800	500	748
BI		6	17.5	18	1,000	800	500	1,000	680	935
BP		8.5	14.5	18	1,000	650	300	700	440	663
BT		9	12.5	18	1,000	700	270	650	410	629
BO		7.5	18.5	18	900	500	350	800	500	748
BS		10	16	18	750	550	300	600	380	561
BR		13	12	18	750	520	200	480	280	425
BY		11	19	18	450	400	250	500	340	510
BA		8.5	12.5	18	1,000	650	300	700	440	663
BZ		12	20	18	350	300	220	450	330	459
DB	22.5	6	14.5	26	805	450	300	700	464	660
DI		7	16	26	700	450	250	550	380	564
DH		8.0	16.0	26	520	300	240	500	330	492
DJ		8.5	17	26	450	350	250	450	280	468
DM		9	18.5	26	400	225	200	400	300	444
DO		10	18.5	26	360	350	160	350	235	396
DP		11	20	26	300	200	190	350	217	360
DU		13	22	26	230	150	150	300	200	300
DY		15.5	24.5	26	150	100	120	250	170	252

Downloaded from Arrow.com.

Packaging Quantities cont.

Size Code	Lead Spacing	Thickness (mm)	Height (mm)	Length (mm)	Bulk Short Leads	Bulk Long Leads	Standard Reel 355 mm	Large Reel 500 mm	Ammo	Pizza
FB	27.5	9.0	17.0	31.5						370
FC		11.0	20.0	31.5						300
FI		13.0	25.0	31.5						250
FN		14.0	28.0	31.5						230
FO		17.0	40.0	31.5						190
FR		17.5	28.0	31.5						190
FS		19.0	29.0	31.5						170
FY		22.0	37.0	31.5						150
FH		21.0	12.5	31.5						150
FQ		27.5	16.0	31.5						120
FT		31.0	19.0	31.5						100
RB	37.5	11.0	22.0	41.0						210
RF		13.0	24.0	41.0						175
RH		15.0	26.0	41.0						154
RC		16.0	28.5	41.0						140
RD		19.0	32.0	41.0						119
RP		21.0	38.0	41.0						105
RO		24.0	44.0	41.0						91
RU		30.0	45.0	41.0						77
RV		24.0	15.0	41.0						91
RW		24.0	19.0	41.0						91

Downloaded from Arrow.com.

Lead Taping & Packaging (IEC 60286–2)

Lead Spacing 5 mm

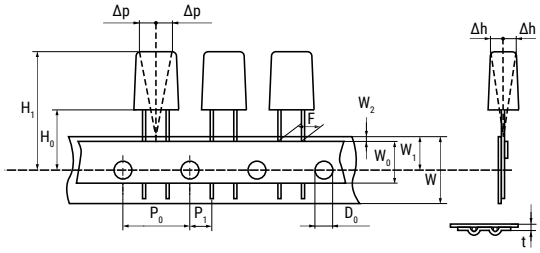

Lead Spacing 7.5 mm

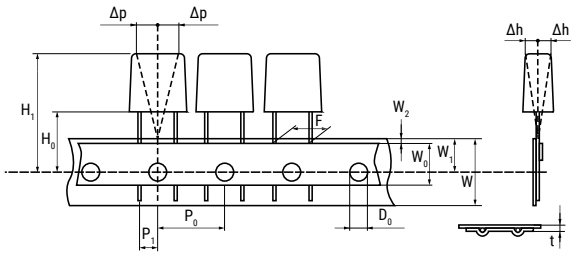

Lead Spacing 10 – 15 mm

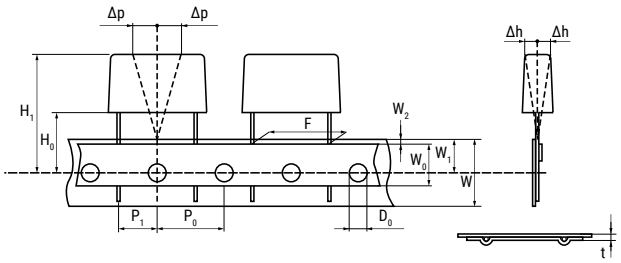

Lead Spacing 22.5 – 27.5 mm

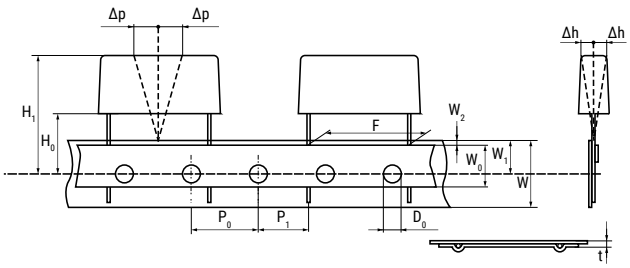

Taping Specification

Dimensions in mm									Standard IEC 60286–2
Lead Spacing	+0.6/−0.1	F	5.0	7.5	10.0	15.0	22.5	27.5	F
Carrier Tape Width	+1/−0.5	W	18.0	18.0	18.0	18.0	18.0	18.0	$18^{+1/-0.5}$
Hold-Down Tape Width	Minimum	W_0	6.0	6.0	9.0	10.0	10.0	10.0	
Position of Sprocket Hole	±0.5	W_1	9.0	9.0	9.0	9.0	9.0	9.0	$9^{+0.75/-0.5}$
Distance Between Tapes	Maximum	W_2	3.0	3.0	3.0	3.0	3.0	3.0	3.0
Sprocket Hole Diameter	±0.2	D_0	4.0	4.0	4.0	4.0	4.0	4.0	4.0
Feed Hole Lead Spacing	±0.2(1)	P_0(3)	12.7	12.7	12.7	12.7	12.7	12.7	12.7
Distance Lead – Feed Hole	±0.7	P_1	3.85	3.75	7.7	5.2	7.8	5.3	P^1
Deviation Tape – Plane	Maximum	Δp	1.3	1.3	1.3	1.3	1.3	1.3	1.3
Lateral Deviation	±2	Δh	2.0	2.0	2.0	2.0	2.0	2.0	2.0
Total Thickness	±0.2	t	0.7	0.7	0.7	0.7	0.9^{MAX}	0.9^{MAX}	0.9^{MAX}
Sprocket Hole/Cap Body	±0.5	H_0(2)	$18.5^{\pm0.5}$	$18.5^{\pm0.5}$	$18.5^{\pm0.5}$	$18.5^{\pm0.5}$	$18.5^{\pm0.5}$	$18.5^{\pm0.5}$	$18^{+2/-0}$

(1) Maximum cumulative feed hole error, 1 mm per 20 parts.
(2) 16.5 mm available on request.
(3) 15 mm available on request (F ≥ 10 mm).

Downloaded from Arrow.com.

Lead Taping & Packaging (IEC 60286–2) cont.

Ammo Specifications

Series	Dimensions (mm)		
	H	W	T
F5A, F5B, F5D	360	340	59
F6xx, F8xx			
PHExxx, PMExxx, PMRxxx	330	330	50

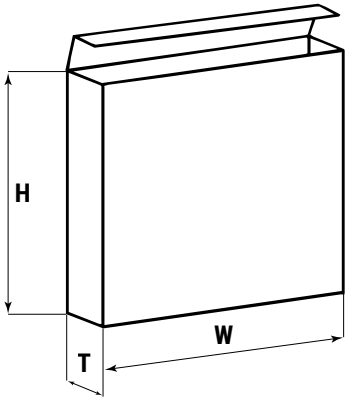

Reel Specifications

Series	Dimensions (mm)		
	D	H	W
F5A, F5B, F5D	355	30	55 (Max)
F6xx, F8xx	500	25	
PHExxx, PMExxx, PMRxxx	360 500	30	46 (Max)

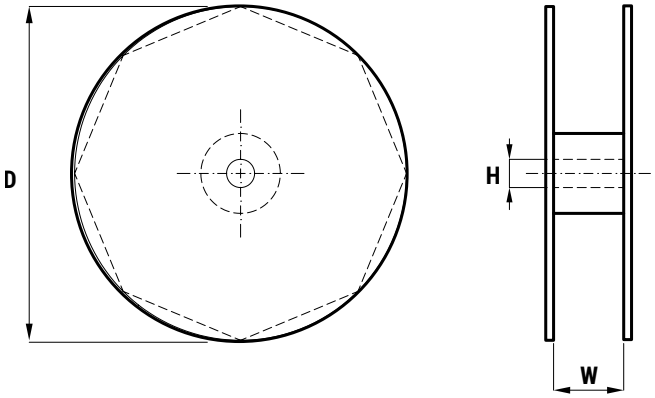

Downloaded from Arrow.com.

KEMET Electronics Corporation Sales Offices

For a complete list of our global sales offices, please visit https://www.yageogroup.com/SalesResources/SalesOffices

Disclaimer

YAGEO Corporation and its affiliates do not recommend the use of commercial or automotive grade products for high reliability applications or manned space flight.

All product specifications, statements, information and data (collectively, the "Information") in this datasheet are subject to change. The customer is responsible for checking and verifying the extent to which the Information contained in this publication is applicable to an order at the time the order is placed. All Information given herein is believed to be accurate and reliable, but it is presented without guarantee, warranty, or responsibility of any kind, expressed or implied.

Statements of suitability for certain applications are based on KEMET Electronics Corporation's ("KEMET") knowledge of typical operating conditions for such applications, but are not intended to constitute – and KEMET specifically disclaims – any warranty concerning suitability for a specific customer application or use. The Information is intended for use only by customers who have the requisite experience and capability to determine the correct products for their application. Any technical advice inferred from this Information or otherwise provided by KEMET with reference to the use of KEMET's products is given gratis, and KEMET assumes no obligation or liability for the advice given or results obtained.

Although KEMET designs and manufactures its products to the most stringent quality and safety standards, given the current state of the art, isolated component failures may still occur. Accordingly, customer applications which require a high degree of reliability or safety should employ suitable designs or other safeguards (such as installation of protective circuitry or redundancies) in order to ensure that the failure of an electrical component does not result in a risk of personal injury or property damage.

Although all product–related warnings, cautions and notes must be observed, the customer should not assume that all safety measures are indicated or that other measures may not be required.

Additional information about production site flexibility can be found <here>

KEMET is a registered trademark of KEMET Electronics Corporation.

Downloaded from Arrow.com.