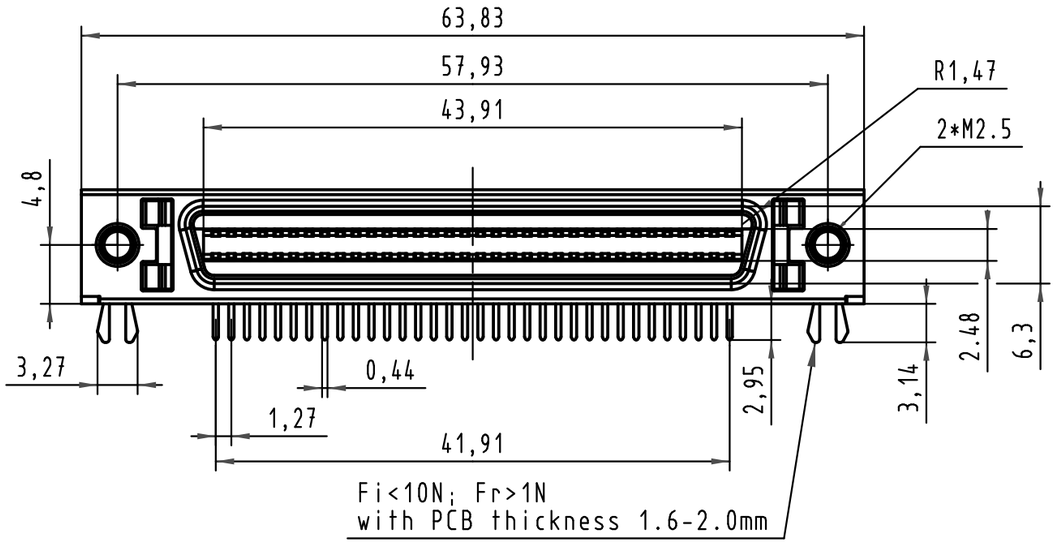

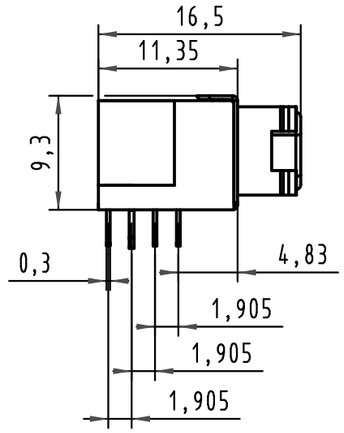

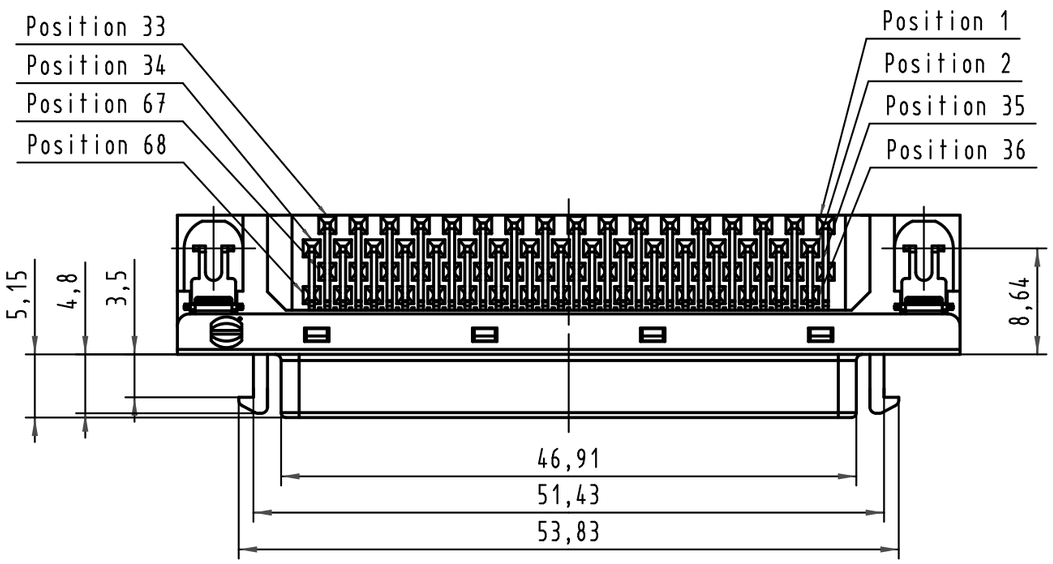

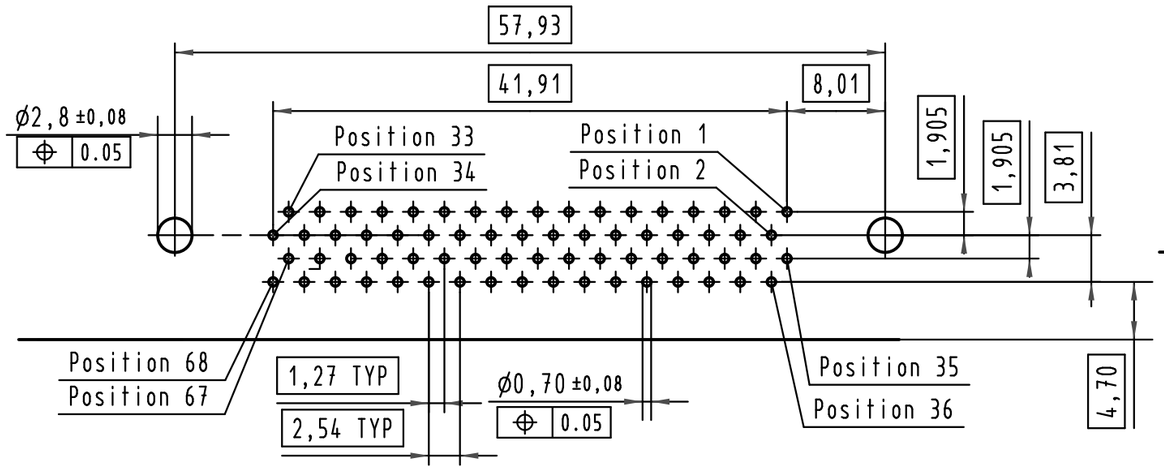

PCB layout: component side

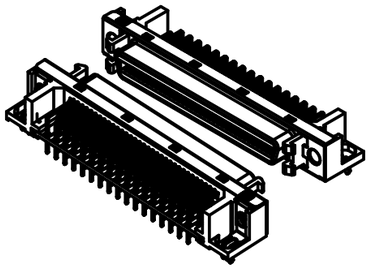

According to IEC 61076-3-100

1)see TB 60 11 068 5740 folio 2/2
for reel packaging.

All Dimensions in mm Original Size DIN A 3			Techn. Character.				Free size tolerances
				Dat.	Name	Scale	*har.mik®* I/O bellow
			Detail.	29-OCT-09	Chris.W	2 : 1	68P Har.mik female SMC with angled solder pins, boardLocks, fixed latches
			Insp.				
			Stand.				
EC01456	13-Apr-10	J.Sheng	Zhuhai Harting Limited				TB 60 11 068 5740
31770	29-OCT-09	Chris.W					Page 1/2
Mod.	Dat.	Name					Sub.

All rights reserved

Downloaded from Arrow.com.