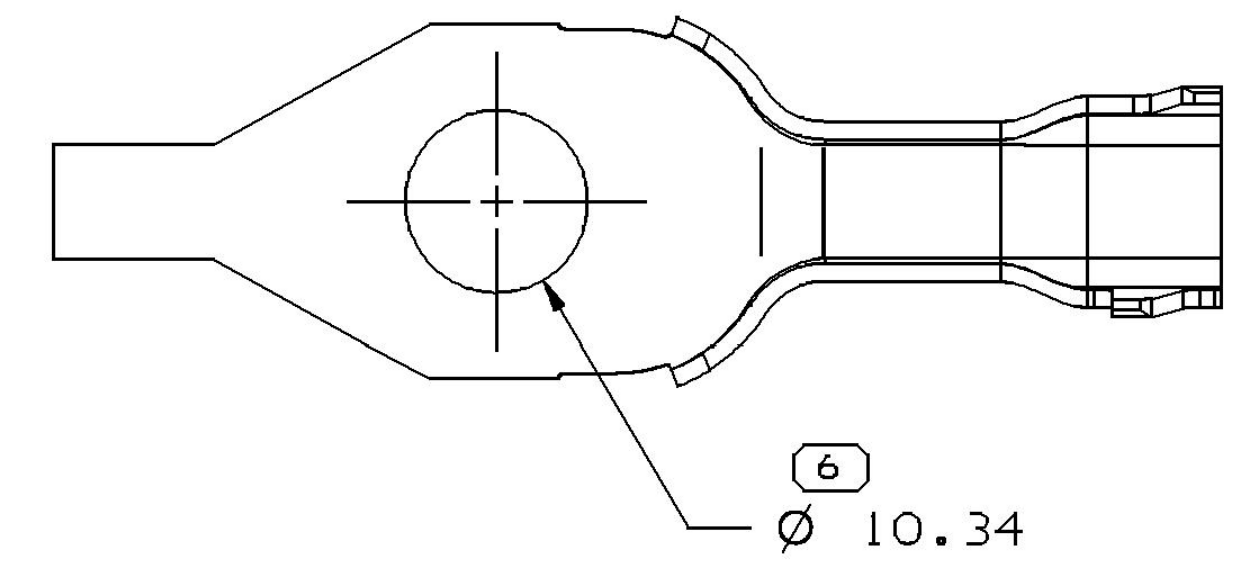

TYPE 502
SAME AS TYPE 501
EXCEPT AS SHOWN

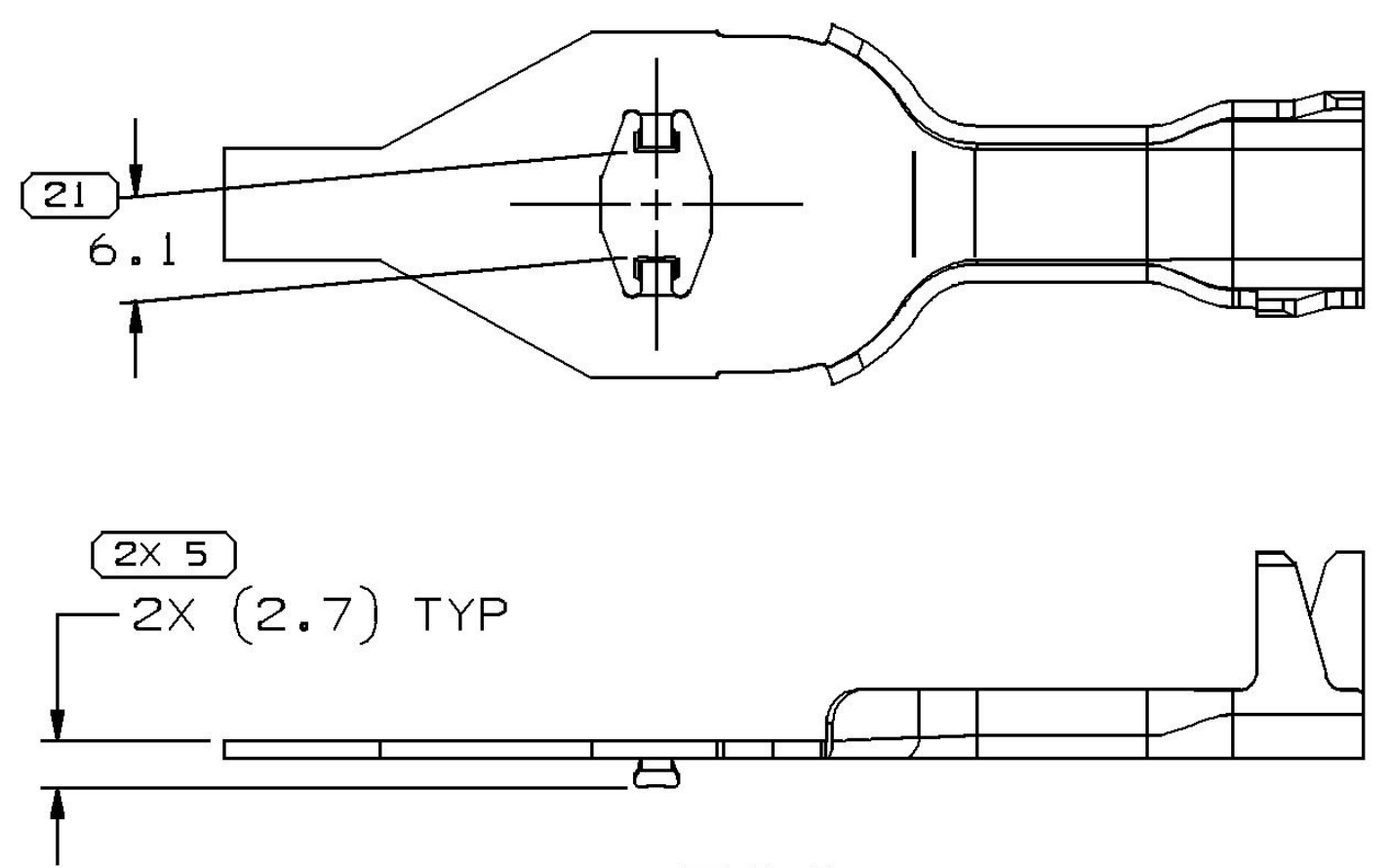

TYPE 503
SAME AS TYPE 501
EXCEPT AS SHOWN

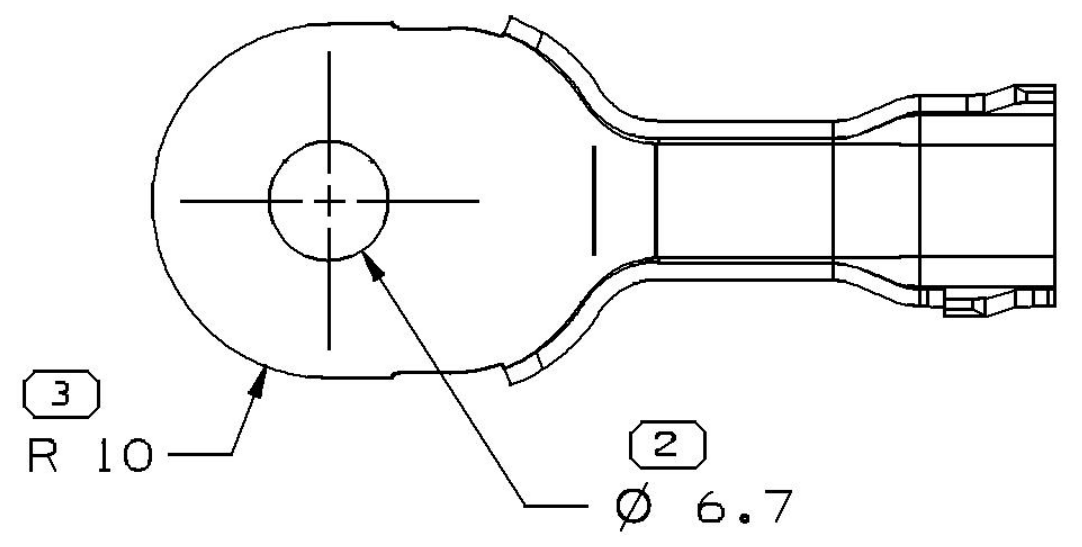

TYPE 504
SAME AS TYPE 501
EXCEPT AS SHOWN

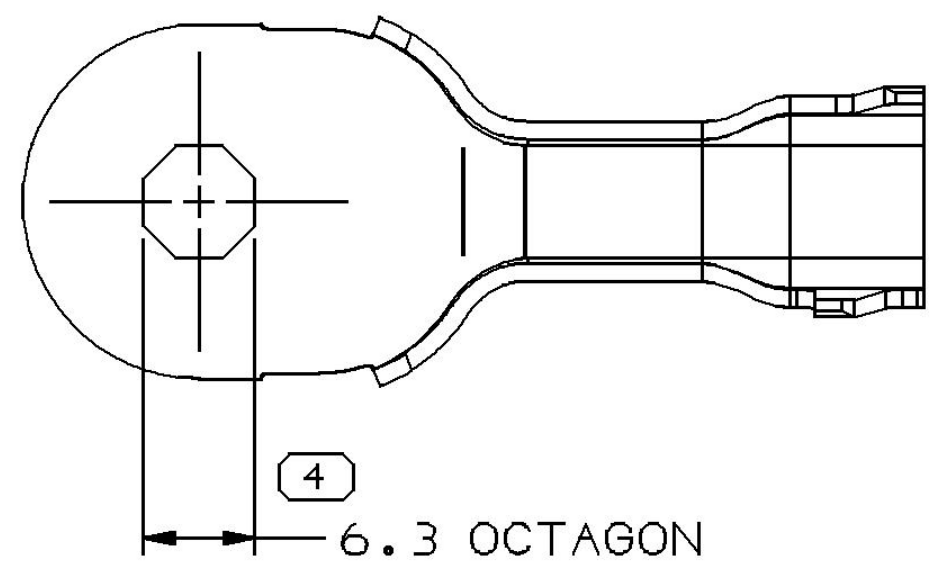

TYPE 505
SAME AS TYPE 504
EXCEPT AS SHOWN

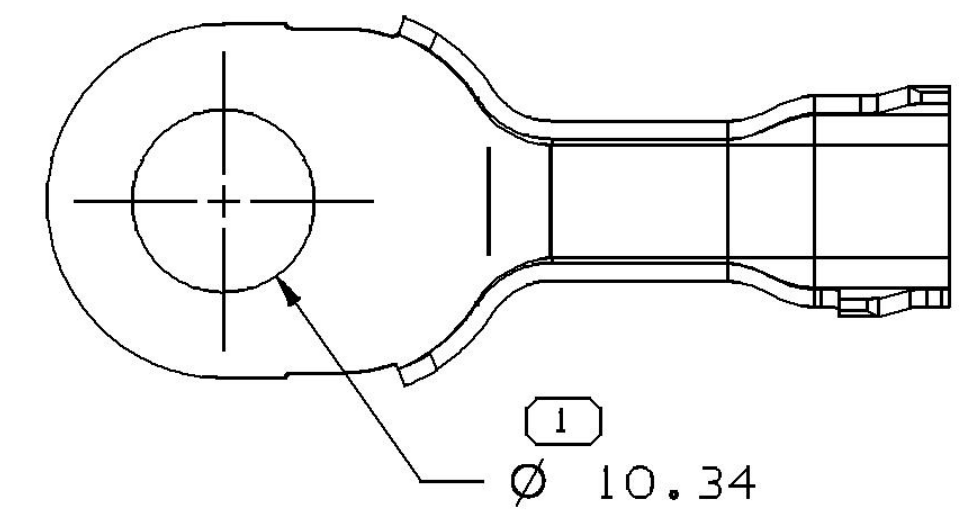

TYPE 506
SAME AS TYPE 504
EXCEPT AS SHOWN

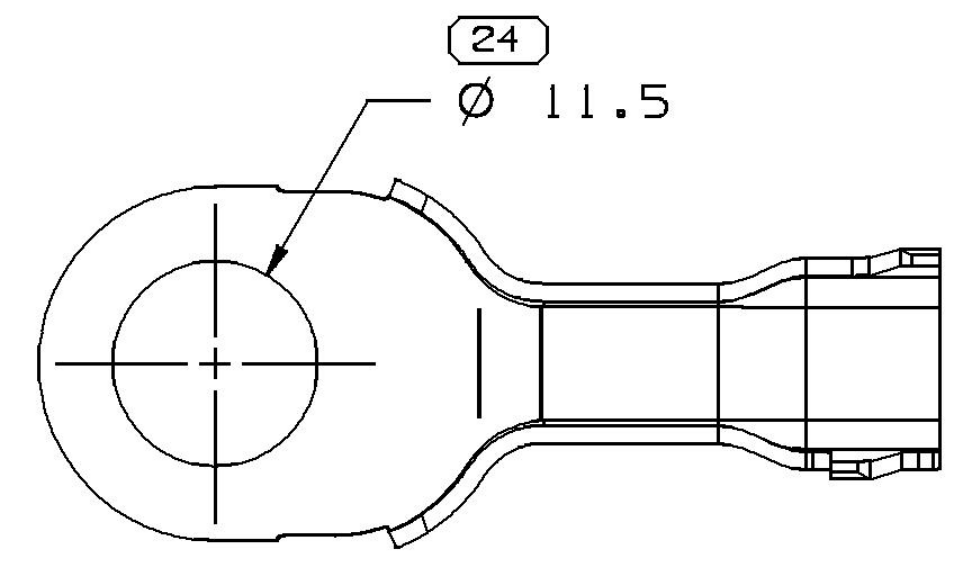

TYPE 507
SAME AS TYPE 504
EXCEPT AS SHOWN

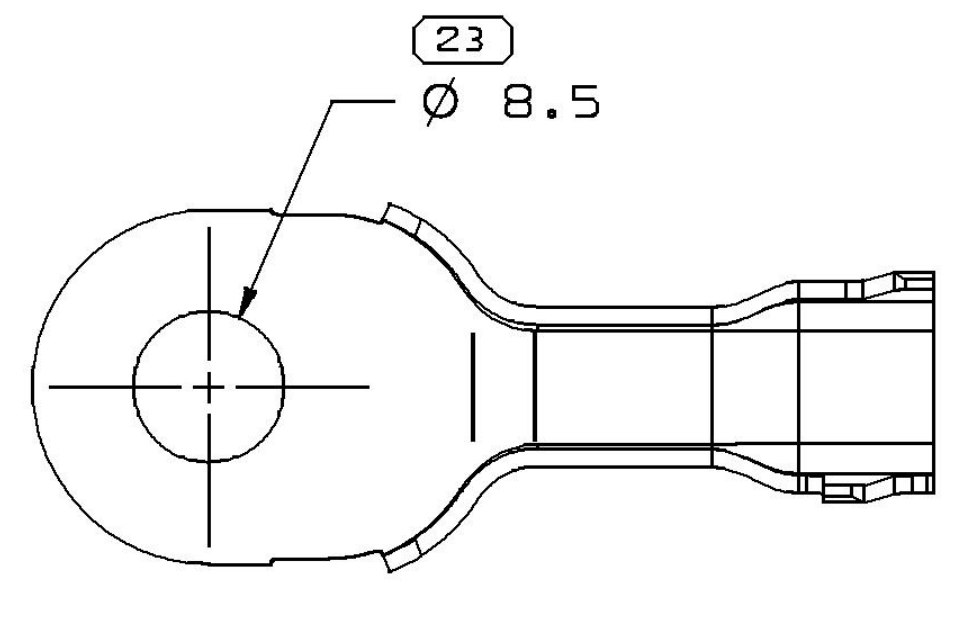

TYPE 508
SAME AS TYPE 504
EXCEPT AS SHOWN

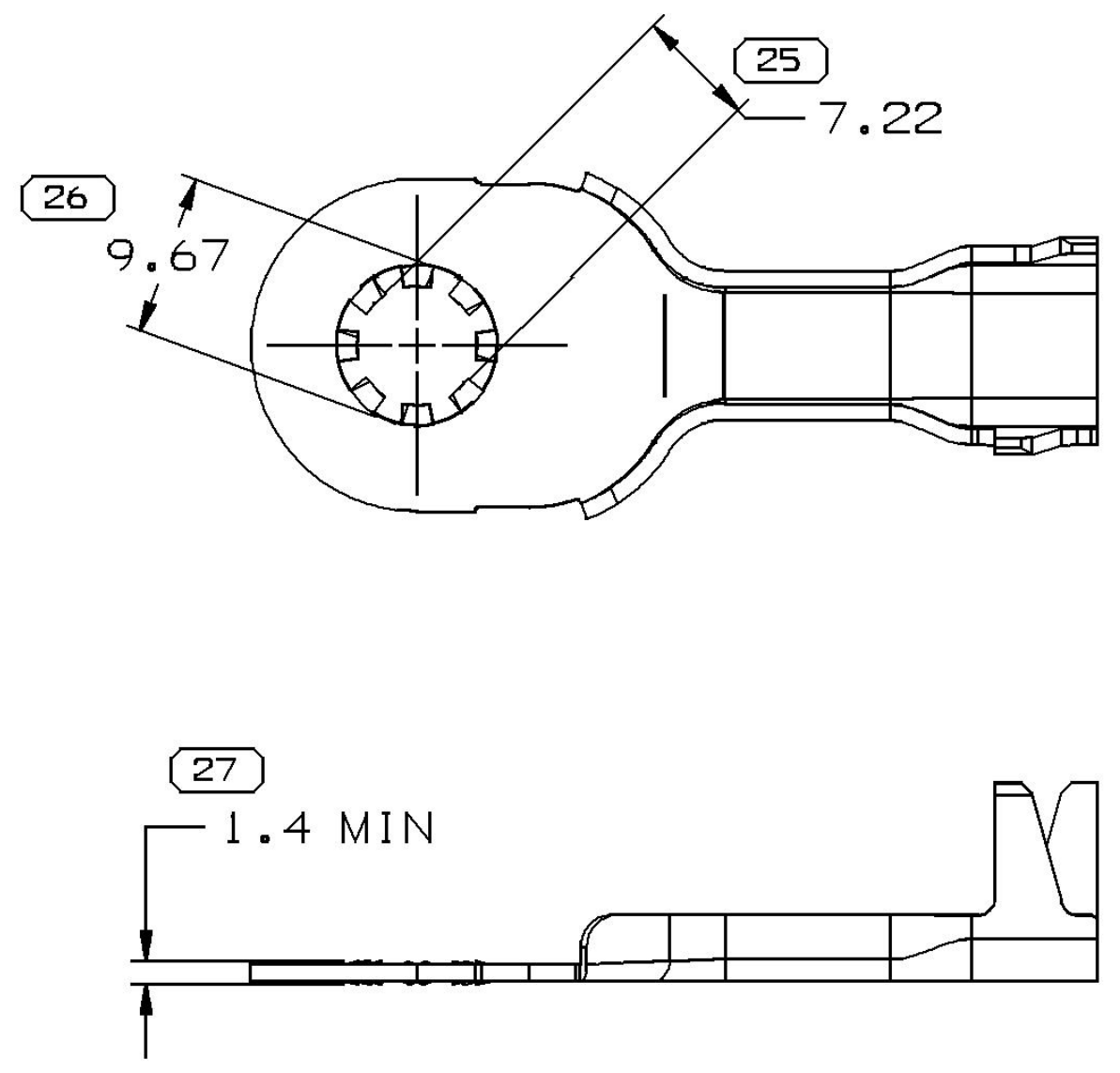

TYPE 509
SAME AS TYPE 504
EXCEPT AS SHOWN

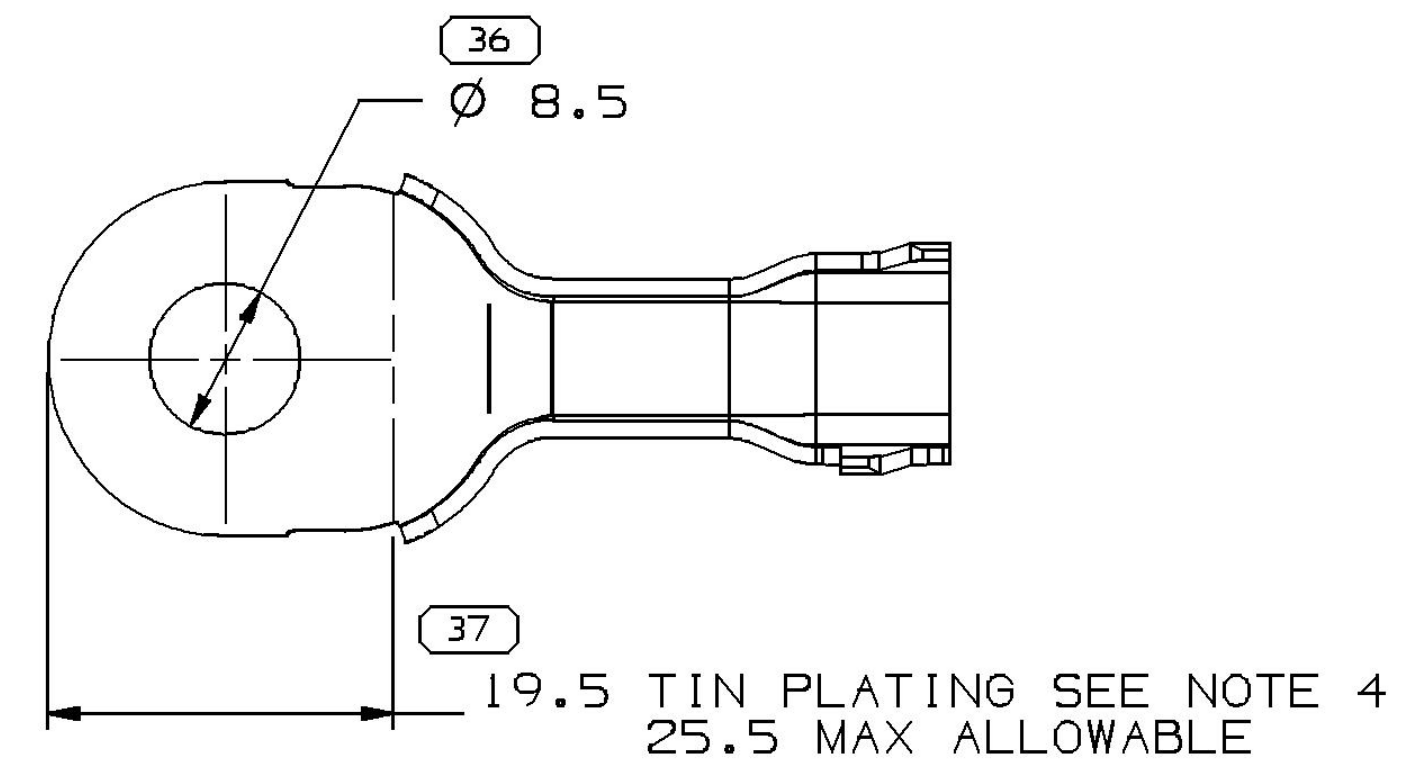

TYPE 510
SAME AS TYPE 504
EXCEPT AS SHOWN

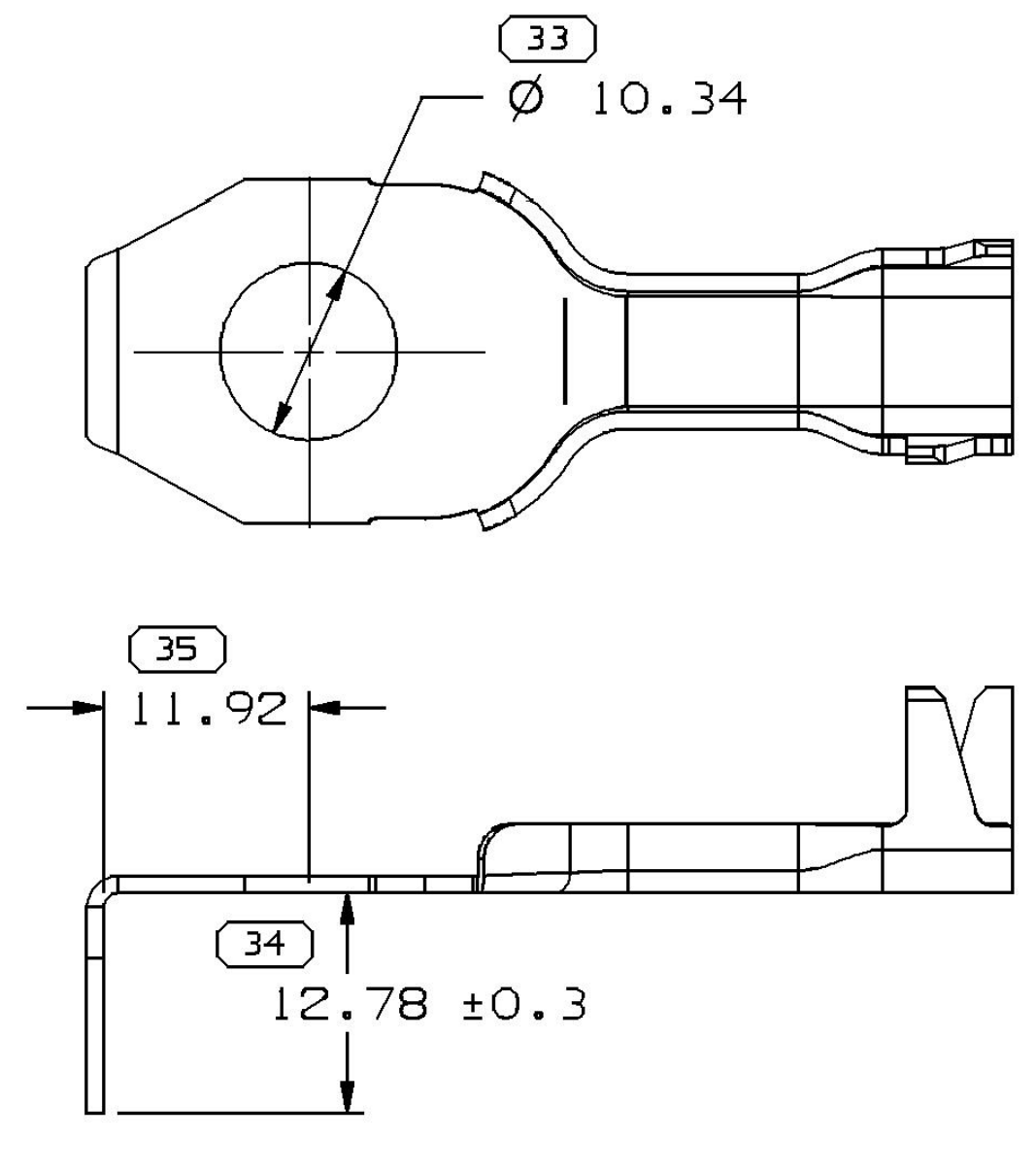

TYPE 511
SAME AS TYPE 501
EXCEPT AS SHOWN

SYMBOL DEFINITION		
A DIMENSION WITHOUT AN INSPECTION REPORT SYMBOL ⬭ DOES NOT REQUIRE INSPECTION. IT MAY BE CONTROLLED ON THE INDIVIDUAL COMPONENT DRAWING.	TOTAL NO OF INSPECTIONS REQUIRED	38
	LAST NO. USED	37

MISSING SYMBOLS
28-29

DWG STATUS					ZONE	REVISION HISTORY	AUTH	DR	APVD 1	APVD 2
DATE	STG	REV	N/P	CHG						
15MY10	R	01	-	-		ALL PARTS - RELEASED	410844	MAL	MAL	CRD
08DE10	R	02	-	-		ALL PARTS - CORRECTED MAT'L CALLOUT	412841	CRD	CRD	CRD
25FE11	R	03	-	-		ALL PARTS - UPDATED PDM ATTRIBUTES	413473	AHY	JVM	CRD
12MA12	R	04	-	-		ALL PARTS - ADDED "REPLACED BY" AND UPDATED "STATUS" COLUMNS ON CHART.	417428	LRS	LRS	LRS
07SE15	R	05	-	-		ALL PARTS - WERE INACTIVE; ADDED PROCESS NOTES 5, 6 & 7 AND SONIC WELD AREA LABEL; REVISED STORAGE AND SHIPMENT NOTE AND ALL PARTS - INACTIVE	430477	ABH	JVM	ERG
15FE16	R	06	-	-		33327688-89 - RELEASED AND ADDED "REPLACED BY" INFO.	432074	JVR	JVM	ERG
28JN16	R	07	-	-		ALL PARTS - REMOVED "REPLACED BY" COLUMN; 13817094 - UPDATED PART AVAILABILITY	433497	ERG	VMR	ERG
31AU16	R	08	-	-		13817090 - WAS INACTIVE AND UPDATED PART AVAILABILITY	434081	ORA	ERG	ERG
06JA17	R	09	-	-		13817804 - UPDATED PART AVAILABILITY	435307	CGD	CGD	LES
10MR17	R	10	-	-		13817092 - UPDATED PART AVAILABILITY	436022	GDH	JVM	VMR
27MR17	R	11	-	-		13817096 - UPDATED PART AVAILABILITY	436133	NRM	NRM	VMR

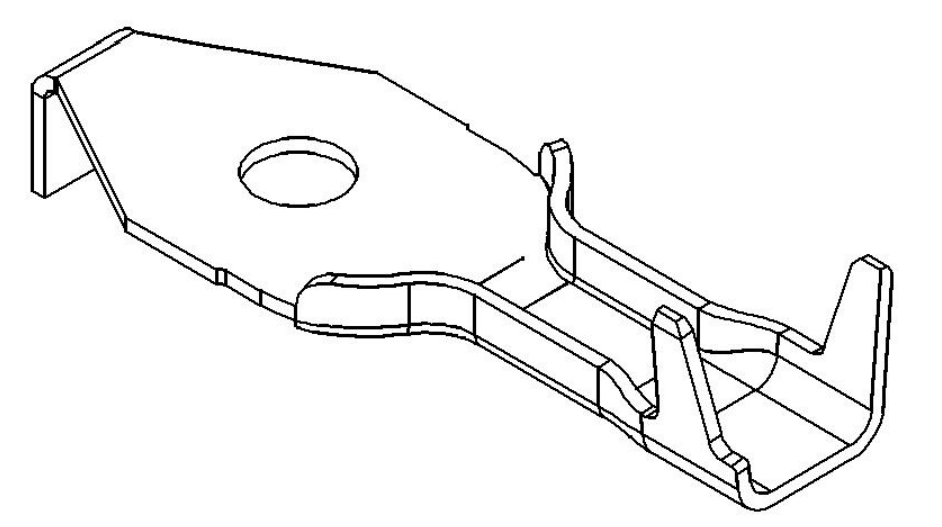

TYPE 501

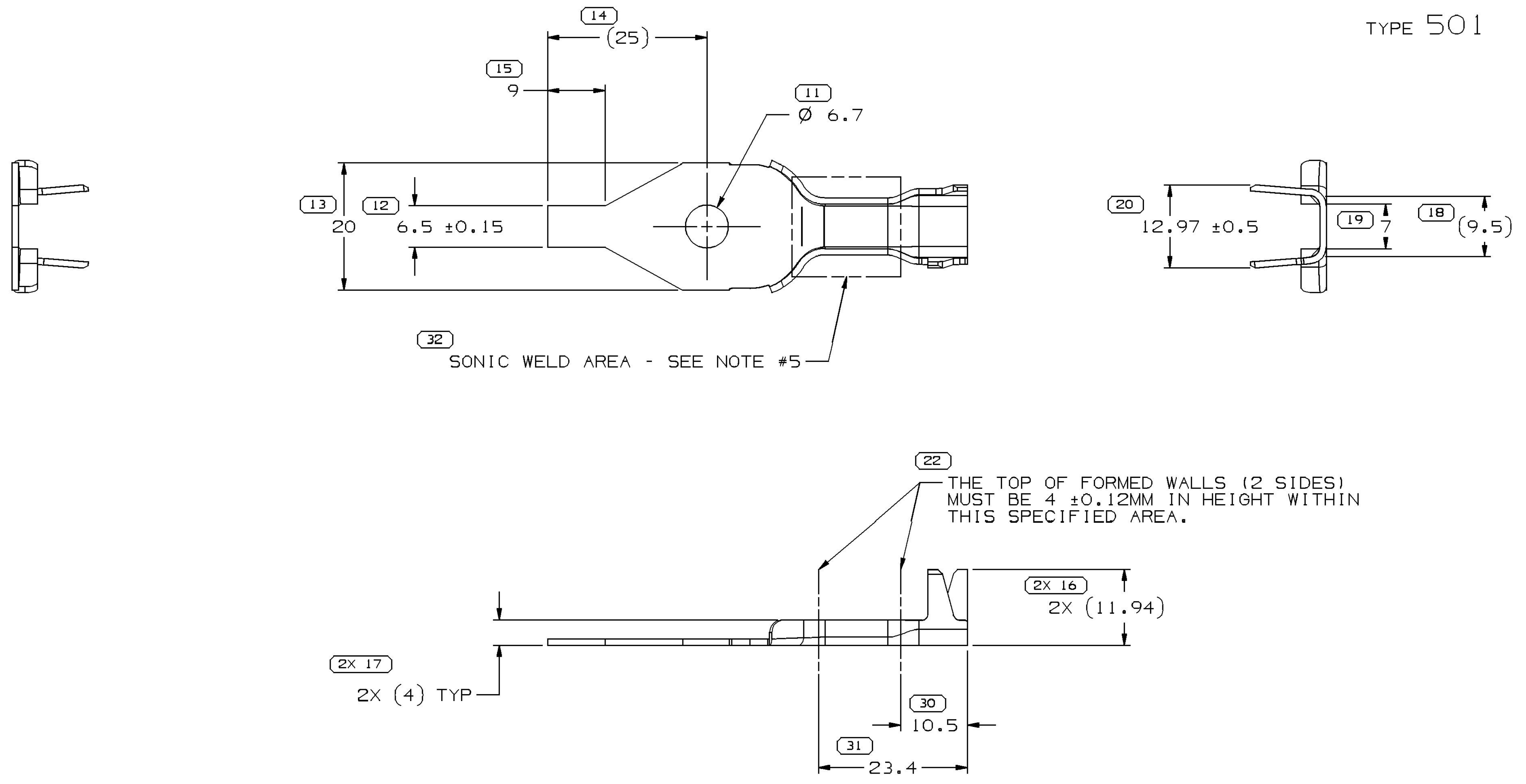
14
(25)
15
9
11
Ø 6.7
13
20
12
6.5 ±0.15
32
SONIC WELD AREA - SEE NOTE #5
20
12.97 ±0.5
19
7
18
(9.5)
22
THE TOP OF FORMED WALLS (2 SIDES) MUST BE 4 ±0.12MM IN HEIGHT WITHIN THIS SPECIFIED AREA.
2X 16
2X (11.94)
2X 17
2X (4) TYP
30
10.5
31
23.4

TYPE 501

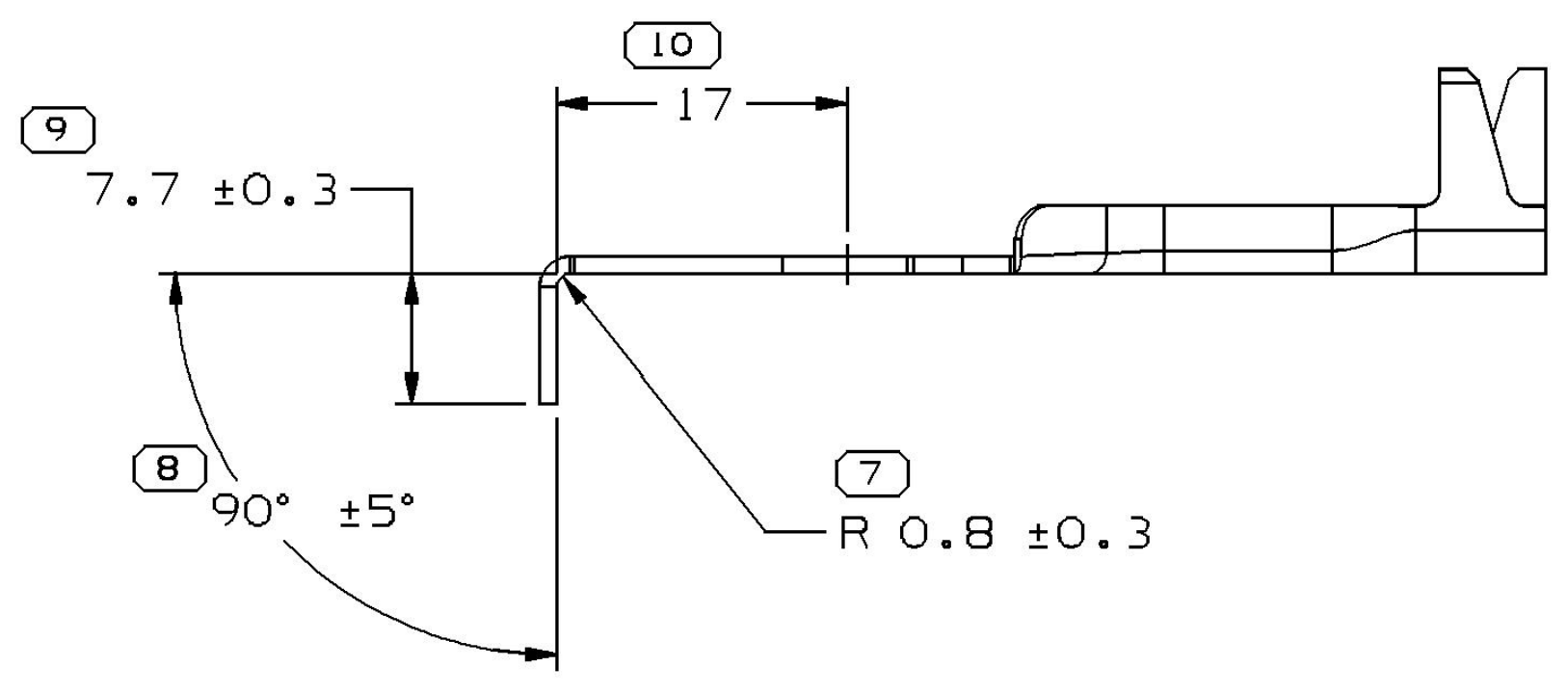

TYPE 501, 502 & 503
BEND ANGLE VIEW

NOTES

1. UNLESS OTHERWISE SPECIFIED AND/OR INDICATED: DIMENSIONS ARE TO FACE OF VIEW SHOWN AND AUTOMATICALLY ROUNDED BY COMPUTER FOR INSPECTION (SEE MATH MODEL FOR PRECISE DIMENSIONS). FOR ALL OTHER DIMENSIONS NOT SHOWN BUT REQUIRED FOR TOOL BUILD, SEE MATH MODEL FOR PRECISE TOOL PATH DATA.
2. TERMINAL MUST BE MADE USING FIN-LUBE 0177 STAMPING LUBE OIL. ANY OTHER LUBRICANT MUST BE APPROVED BY PRODUCT ENGINEERING.
3. TERMINALS ARE TO BE SINGULATED FROM CARRIER AND PLACED IN CLEAN CLOSED PLASTIC BAG PRIOR TO STORAGE AND SHIPMENT.
4. PRE-PLATED SELECTIVE MATTE TIN (99.9%) AS DIMENSIONED.
5. SONIC WELD AREA AS DEFINED ON DRAWING MUST BE KEPT FREE OF TIN PLATING OR OTHER COATING/PLATING.
6. PARTS SHALL BE FREE OF DEBRIS; RESIDUAL ABRASIVE MATERIALS; CORROSION PRODUCTS; OIL/LUBRICANT AND ANY EXTERNAL RESIDUE.
7. PARTS MUST BE KEPT THE SONIC WELDING AREA DRY PRIOR TO THE WELDING PROCESS.

PART NO	REV	N/P	MAT'L SIZE	MATERIAL SPECIFICATION	TYPE	ANTI-ROTATION	BUNDLE SIZE MM²	NO. OF WIRES (MIN-MAX)
~~33327689~~	01	AA	1.0 X 70	COPPER ALLOY	511	YES	6.5-13.5	1-12
~~33327688~~	01	AA	1.0 X 72.9	TIN PLATED COPPER ALLOY	510	NO	6.5-13.5	1-12
~~13817807~~	01	AE	1.0 X 55	COPPER ALLOY	509	NO	6.5-13.5	1-12
~~13817809~~	01	AE	1.0 X 55	COPPER ALLOY	508	NO	6.5-13.5	1-12
~~13817808~~	01	AE	1.0 X 55	COPPER ALLOY	507	NO	6.5-13.5	1-12
13817096	01	AF	1.0 X 55	COPPER ALLOY	506	NO	6.5-13.5	1-12
13817094	01	AE	1.0 X 55	COPPER ALLOY	505	YES	6.5-13.5	1-12
13817092	01	AF	1.0 X 55	COPPER ALLOY	504	NO	6.5-13.5	1-12
~~13817805~~	01	AE	1.0 X 70	COPPER ALLOY	503	YES	6.5-13.5	1-12
13817804	01	AF	1.0 X 70	COPPER ALLOY	502	YES	6.5-13.5	1-12
13817090	01	AF	1.0 X 70	COPPER ALLOY	501	YES	6.5-13.5	1-12

(20) PROCESS SENSITIVE DIMENSION

DIMENSIONS ENCLOSED IN ( ) INDICATE REFERENCE DIMENSIONS AND NO TOLERANCE LIMITS ARE ESTABLISHED

DIMENSIONAL RANGE (MM)		CHART D
FROM TO	0 12	>12
TOLERANCE UNLESS OTHERWISE SPECIFIED	±0.1	±0.2
ANGULAR TOLERANCE ±2°		

A ⟋ LINE DRAWN THROUGH A PART NUMBER INDICATES THAT PHYSICAL PARTS ARE NOT AVAILABLE FOR ORDERING.

PART NUMBERS THAT DO NOT HAVE A LINE PRESENT INDICATE THAT PHYSICAL PARTS ARE AVAILABLE FOR ORDERING.

CONTACT DELPHI SALES TO ASSURE AVAILABILITY OF PARTS.

DWG TYPE: PART DRAWING

STYLE

VOLUME (CM³)

DISTR CODE: D

UNLESS OTHERWISE SPECIFIED

THIS DOCUMENT IS IN ACCORDANCE WITH ASME Y14.5M-1994 AS AMENDED BY THE GM GLOBAL DIMENSIONING AND TOLERANCING ADDENDUM - 1997. ALL GEOMETRIC TOLERANCES AND RELATED DATUMS APPLY RFS. RULE #1(PERFECT FORM AT MMC) DOES NOT APPLY WHEN RELATIONSHIP BETWEEN FEATURES IS ESTABLISHED BY ORIENTATION OR LOCATION TOLERANCES. SEPARATE POSITION CALLOUTS MAY BE GAGED SEPARATELY, REGARDLESS OF DATUM REFERENCE.

ALL DIMENSIONS ARE IN MILLIMETERS

REFERENCE

THIRD ANGLE PROJECTION

DO NOT SCALE

USE MATH DATA

CAD NX

DELPHI

DELPHI PACKARD ELECTRICAL/ELECTRONIC ARCHITECTURE
WARREN, OH

COPYRIGHT 2010 DELPHI CORPORATION AND/OR ITS AFFILIATES.
ALL RIGHTS RESERVED.
REVISED 2017
THIS DRAWING IS THE PROPERTY OF DELPHI CORPORATION AND CONTAINS DELPHI CONFIDENTIAL INFORMATION. THE REPRODUCTION, DISTRIBUTION AND UTILIZATION OF THIS DOCUMENT OR ITS RELATED CAD MATH DATA, AS WELL AS COMMUNICATION OF ANY CONTENT TO OTHERS, WITHOUT EXPRESS AUTHORIZATION, IS PROHIBITED.

		DATE
DR		
APVD1	MIGUEL DE LEON	15MY10
APVD2	MIGUEL DE LEON	15MY10
APVD3	CUAUHTEMOC ROBLES	15MY10
APVD4		
APVD5		

SUBSTANCES OF CONCERN AND RECYCLED CONTENT PER DELPHI 10949001

MATERIAL: SEE CHART

DRAWING NAME: TAXI TERM RING SONIC

DRAWING NUMBER: 15485965

SIZE	SCALE	FRAME NO	SHEET NO	STG	REV	N/P
A0	2:1	1 OF 1	5 OF	R	11	-

User: gzqrd9 Part: 15485965-CUS01-S05 Date: 28-Mar-17 Time: 06:37 Message: