ROHS COMPLIANT

PRODUCT DATA DRAWING

REVISION HISTORY			
REV	DESCRIPTION	DATE	APPROVED
B	DCN 41768	10/15	BNK

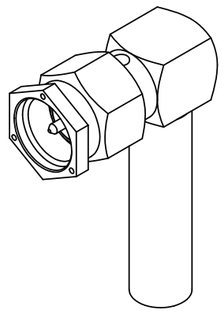

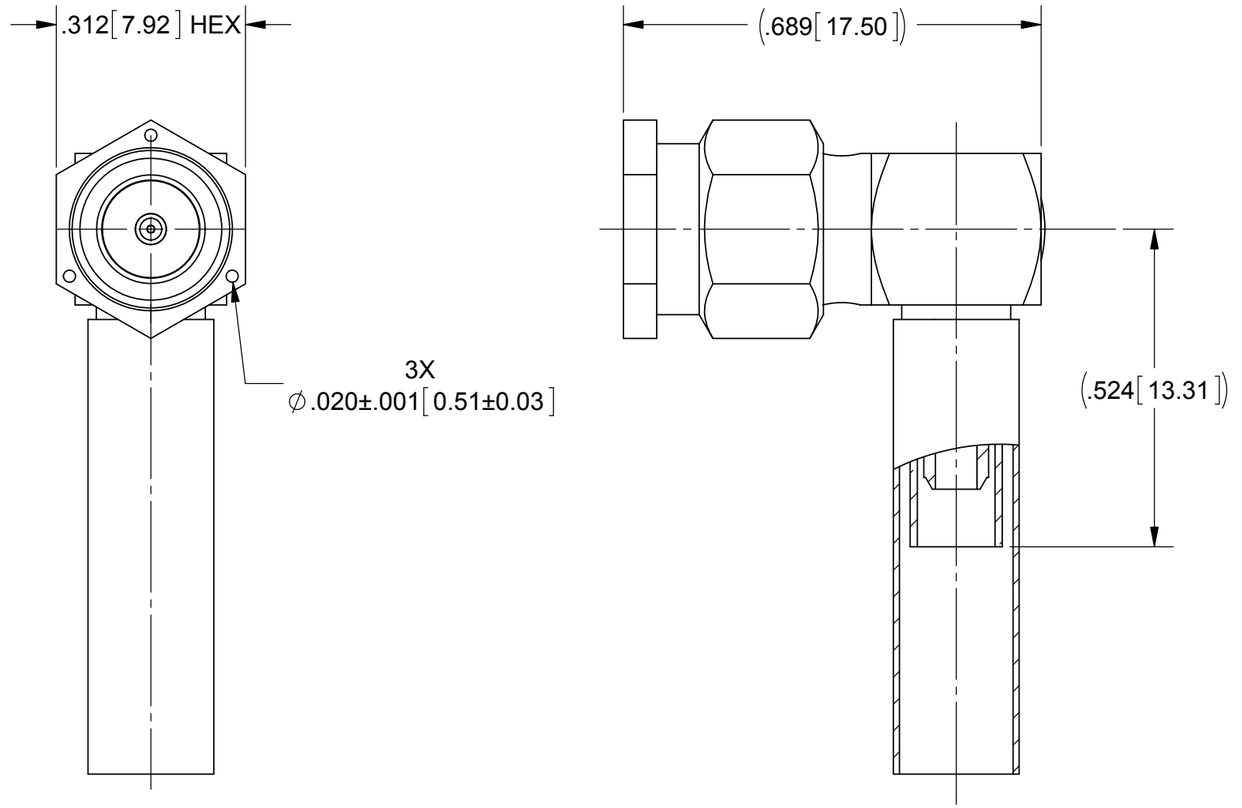

MATERIAL:

BODY, FERRULE, & COUPLING NUT:	STAINLESS STEEL PER AMS-5640, ALLOY UNS S30300, TYPE 1
CONTACT & CRIMP RING:	BRASS PER ASTM B16, ALLOY UNS No. C36000
LOCK RING	BERYLLIUM COPPER PER ASTM B196, ALLOY No. UNS C17300, TD04
CAP:	STAINLESS STEEL PER ASTM A240, UNS S30400
INSULATOR:	PTFE PER ASTM D1710, TYPE I, GRADE 1, CLASS B
GASKET:	SILICONE RUBBER PER A-A-59588, CLASS 2B, GRADE 50/60
TUBING:	M23053/4

FINISH:

BODY, FERRULE, & COUPLING NUT:	PASSIVATED PER AMS-2700
CONTACT:	GOLD PER ASTM B488, TYPE II, CODE C, CLASS 1.27, OVER NICKEL PER AMS-QQ-N-290, CLASS 1, .00005" MIN.
CRIMP RING:	NICKEL PER AMS QQ-N-290, CLASS 2

PERFORMANCE:

IMPEDANCE:	50 OHMS
FREQ. RANGE:	DC TO 12.4 GHz
VSWR:	1.15 + .03(F):1 DC TO 12.4 GHz
INSERTION LOSS:	.15 X SQRT(F(F IN GHz))

MATERIAL: SEE NOTES

FINISH: SEE NOTES

SURFACE AREA: N/A

PROPRIETARY

THE INFORMATION CONTAINED IN THIS DRAWING IS THE SOLE PROPERTY OF SV MICROWAVE, INC. ANY REPRODUCTION IN PART OR AS A WHOLE WITHOUT THE WRITTEN PERMISSION OF SV MICROWAVE, INC IS PROHIBITED.

DIMENSIONS ARE IN INCHES TOLERANCES:

FRACTIONAL: ±1/64 ANGULAR: X° ±1°0' X°X' ±15'

DECIMAL: .X ±.030 .XX ±.010 .XXX ±.005

INTERPRET DIMENSIONS AND TOLERANCES PER ASME Y14.5M - 1994

THIRD ANGLE PROJECTION

UNLESS OTHERWISE SPECIFIED

1) ALL DIMENSIONS ARE IN INCHES [MILLIMETERS]
2) ALL DIMENSIONS ARE AFTER PLATING.
3) BREAK CORNERS & EDGES .005 R. MAX.
4) CHAM. 1ST & LAST THREADS.
5) SURFACE ROUGHNESS 63-MIL-STD-10.
6) DIA.'S ON COMMON CENTERS TO BE CONCENTRIC WITHIN .005 T.I.R.
7) REMOVE ALL BURRS

DRAWN:	DAL 10/13/15
CHECKED:	BNK 10/13/15
APPROVED:	ND 03/01/86

Amphenol SV MICROWAVE
2400 Centrepark West Drive, Suite 100
West Palm Beach, FL 33409

TITLE: SMA MALE R/A CRIMP FOR RG316 CABLE

SIZE	CAGE CODE	DWG. NO.
B	95077	M39012/56-3026

SCALE: 4:1 SHEET 1 OF 1

Downloaded from Arrow.com.