ROHS COMPLIANT

PRODUCT DATA DRAWING

REVISION HISTORY			
REV	DESCRIPTION	DATE	APPROVED
-	DCN 47331	04/18	JMS

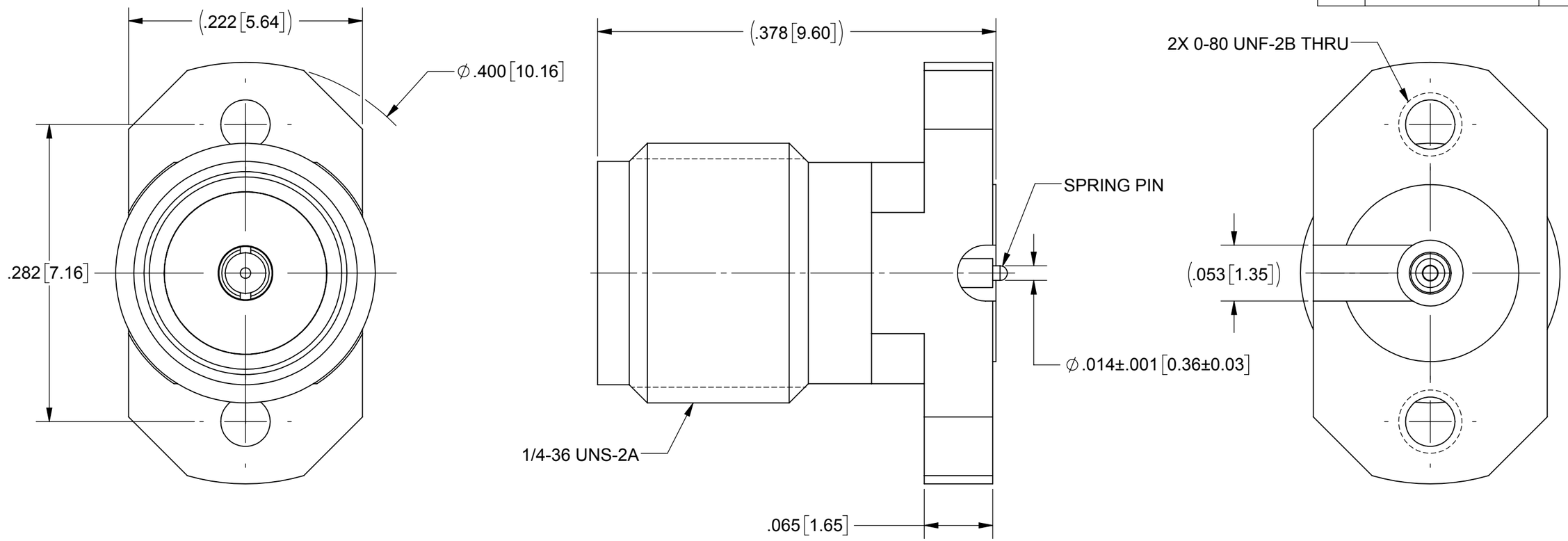

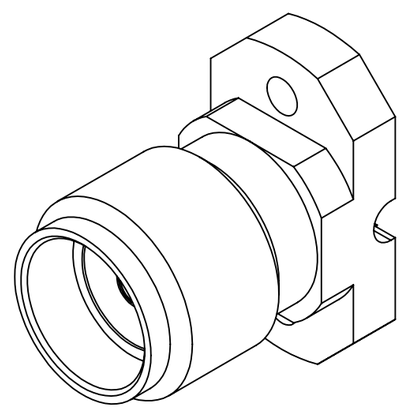

MATERIAL:

BODY: STAINLESS STEEL PER AMS-5640, ALLOY UNS S30300, TYPE 1; OR ASTM A582 TYPE 303, COND. A

CONTACTS: BERYLLIUM COPPER PER ASTM B196, ALLOY No. UNS C17300, TD04

INSULATOR: PTFE PER ASTM D1710, TYPE I, GRADE 1, CLASS B

FINISH:

BODY: PASSIVATED PER AMS-2700

CONTACTS: GOLD PER ASTM B488, TYPE II, CODE C, CLASS 1.27, OVER NICKEL PER AMS-QQ-N-290, CLASS 1, .00005" MIN.

PERFORMANCE:

IMPEDANCE: 50 OHMS
FREQ. RANGE: DC TO 18 GHz.

SV P/N	DESCRIPTION	PCB THICKNESS
SF2921-61506-1S	INCL. TWO .188 SCREWS	.028 TO .123

NOTES:

1. FOR RECOMMENDED FOOTPRINT FOR YOUR PCB, CONTACT SV MICROWAVE SALES DEPARTMEMT (sales@svmicro.com, 561-840-1800).

MATERIAL: SEE NOTES
FINISH: SEE NOTES
SURFACE AREA: N/A

PROPRIETARY

THE INFORMATION CONTAINED IN THIS DRAWING IS THE SOLE PROPERTY OF SV MICROWAVE, INC. ANY REPRODUCTION IN PART OR AS A WHOLE WITHOUT THE WRITTEN PERMISSION OF SV MICROWAVE, INC IS PROHIBITED.

DIMENSIONS ARE IN INCHES TOLERANCES:
FRACTIONAL: ±1/64 ANGULAR: X° ±1°0' X°X' ±15'
DECIMAL: .X ±.030 .XX ±.010 .XXX ±.005

INTERPRET DIMENSIONS AND TOLERANCES PER ASME Y14.5M - 1994

THIRD ANGLE PROJECTION

UNLESS OTHERWISE SPECIFIED
1) ALL DIMENSIONS ARE IN INCHES [MILLIMETERS]
2) ALL DIMENSIONS ARE AFTER PLATING.
3) BREAK CORNERS & EDGES .005 R. MAX.
4) CHAM. 1ST & LAST THREADS.
5) SURFACE ROUGHNESS 63 MIL-STD-10.
6) DIA.'S ON COMMON CENTERS TO BE CONCENTRIC WITHIN .005 T.I.R.
7) REMOVE ALL BURRS

DRAWN:	VB	04/04/18
CHECKED:	JMS	04/04/18
APPROVED:	JMS	04/04/18

Amphenol SV MICROWAVE
2400 Centrepark West Drive, Suite 100
West Palm Beach, FL 33409

TITLE: SMA FEMALE 2 HOLE FLANGE MOUNT W/ SPRING PIN

SIZE	CAGE CODE	DWG. NO.
B	95077	SF2921-61506-1S

SCALE: 10:1 SHEET 1 OF 1

Downloaded from Arrow.com.