Alle Rechte vorbehalten/ *All rights reserved*

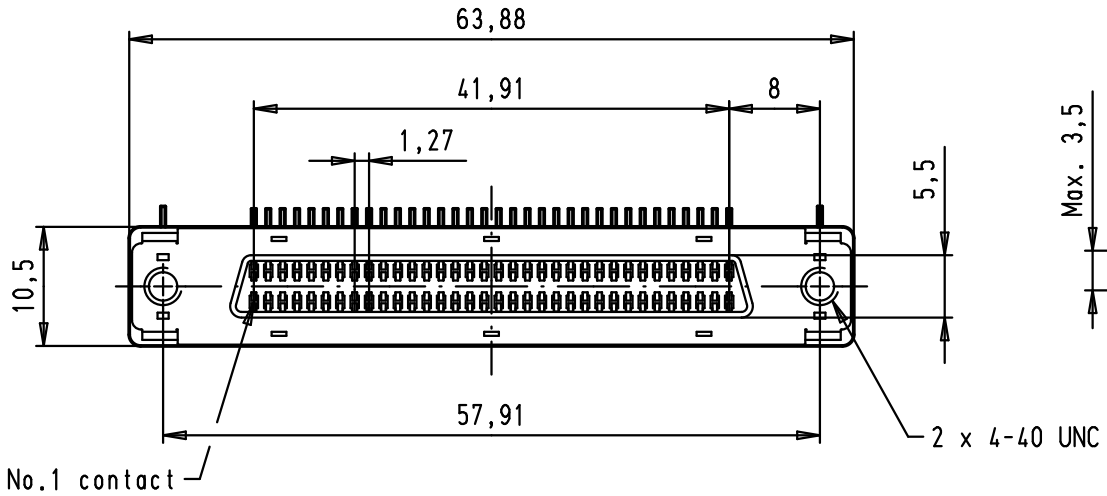

Printed board layout, component side

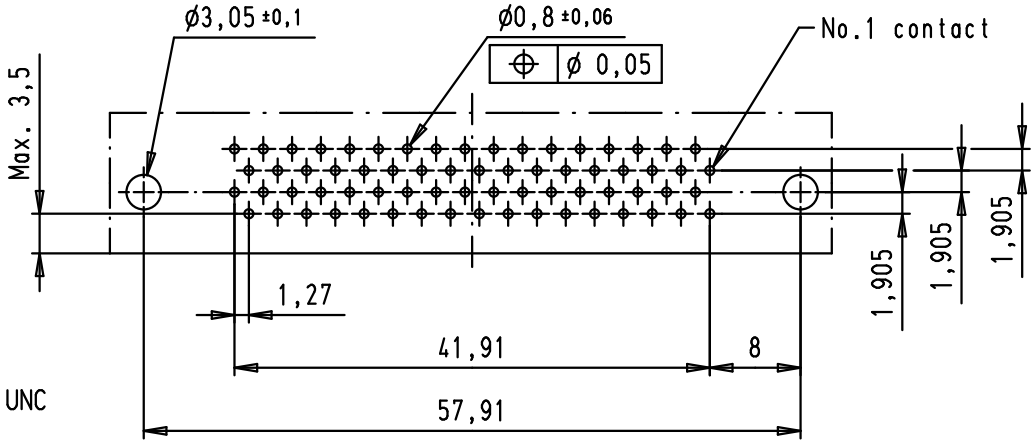

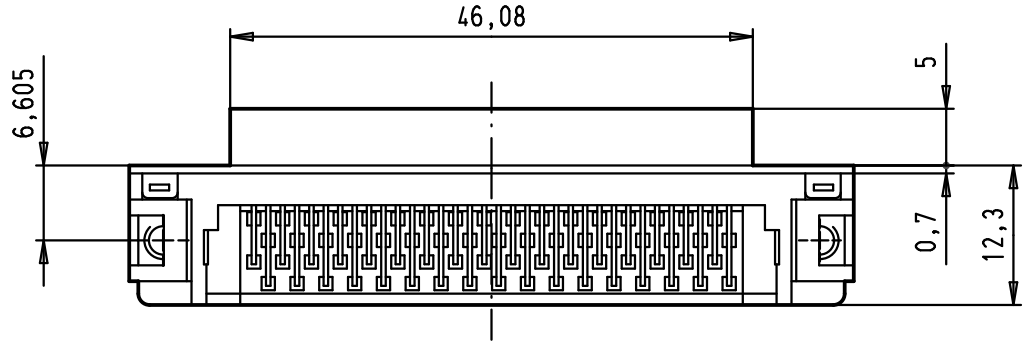

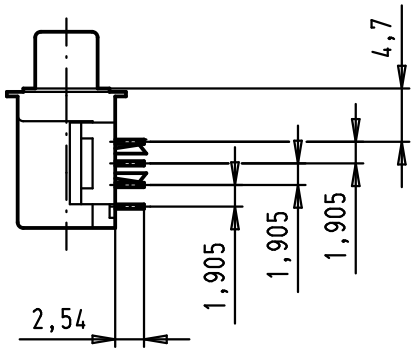

				Dat.	Name
			Detail.	27/06/07	PK
			Insp.		
			Stand.		
34397	23/08/07	PK			
34372	27/06/07	PK			
Mod.	Dat.	Name			

All Dim. in mm
Orig. Size DIN A 4

har.mik® I/O pin/socket
Female, 68 poles
with angled solder pins
and board locks

Maßstab/ *Scale* 1,5:1

HARTING EURL
F-95972 Paris

TB 60 02 068 5151

Sub.

Blatt/ *Page* 1/1

Downloaded from Arrow.com.