PART NUMBER	SSL-LX50595UPGC125	REV	B

REV	E.C.N. NUMBER AND REVISION COMMENTS	DATE
A	E.C.N. #11148	11.09.06
B	ECN-Lumex202000057	08.10.20

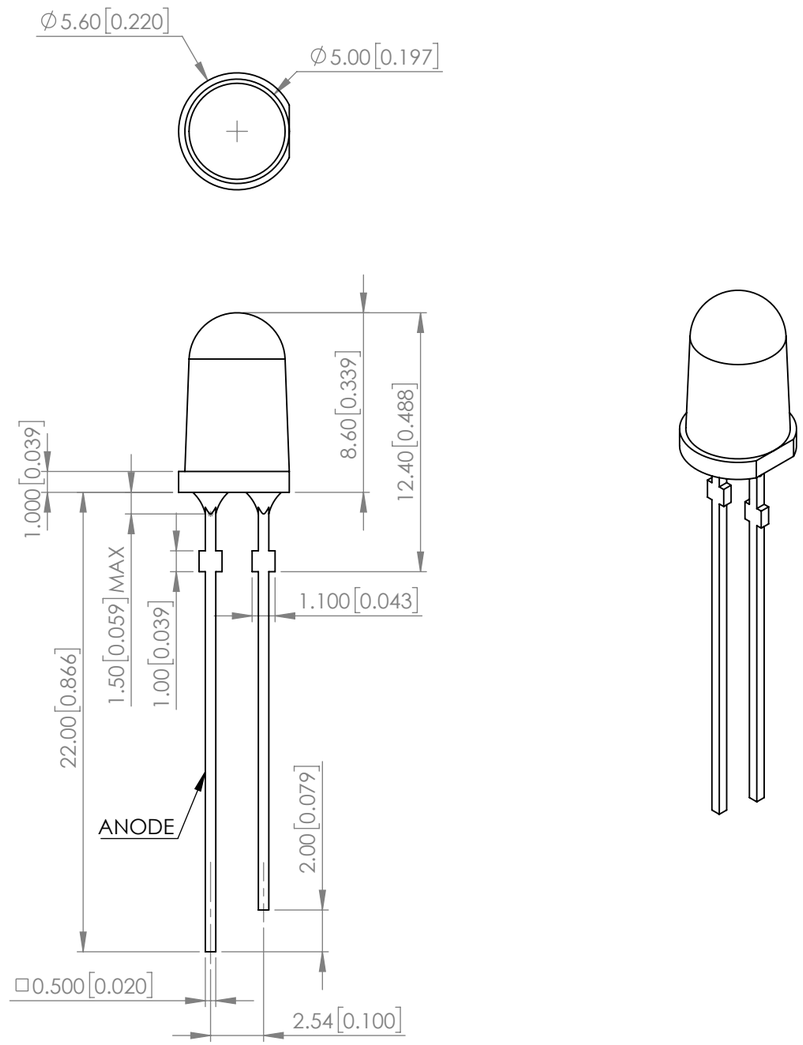

ELECTRO-OPTICAL CHARACTERISTIC TA=25℃

PARAMETER	MIN	TYP	MAX	UNITS	TEST COND
PEAK WAVELENGTH	-	525	-	nm	If=20mA
FORWARD VOLTAGE	-	3.2	3.6	Vf	If=20mA
REVERSE CURRENT	-	-	50	uA	V_R=5V
LUMINOUS INTENSITY	-	37	-	cd	-
VIEWING ANGLE	-	15	-	2x $theta_{1/2}$	-
EMITTED COLOR	GREEN				
EPOXY LENS FINISH	WATER CLEAR				

ABSOLUTE MAXIMUM RATINGS TA=25℃

PARAMETER	MAX	UNITS
PEAK FORWARD CURRENT*	110	mA
FORWARD CURRENT	35	mA
REVERSE VOLTAGE	5	V
POWER DISSIPATION	125	mW
STORAGE TEMPERATURE	-40 TO +100	℃
OPERATING TEMPERATURE	-30 TO +85	℃
LEAD SOLDER TEMPERATURE**	3SEC MAX @260	℃

*1/10 Duty Cycle, 0.1ms Pulse Width
**2mm FROM BODY

STATIC DEVICE FOLLOW PROPER
E.S.D. HANDLING PROCEDURES
WHEN WORKING WITH THIS PART

*UNLESS OTHERWISE SPECIFIED TOLERANCES PER DECIMAL PRECISION ARE: X=±1 (±0.039), X.X=±0.5 (±0.020), X.XX=±0.25 (±0.010), X.XXX=±0.127 (±0.005). LEAD SIZE=±0.05 (±0.002), LEAD LENGTH=±0.75 (±0.030). MIN= $^{+\text{DECIMAL PRECISION}}_{-0.00}$ MAX.= $^{+0.00}_{-\text{DECIMAL PRECISION}}$

LUMEX® Creating LED and LCD Solutions Together™
425 N. GARY AVE.
CAROL STREAM, IL 60188
PHONE : 800-278-5666
FAX : 630-315-2150
WEB : WWW.LUMEX.COM

T-5mm(T-1 3/4), 525nm GREEN LED, WATER CLEAR TAPERED LENS, WITH STANDOFFS

****THE SPECIFICATIONS MAY CHANGE AT ANY TIME WITHOUT NOTICE.****

CONFIDENTIAL INFORMATION
THE INFORMATION CONTAINED IN THIS DOCUMENT IS THE PROPERTY OF LUMEX INC. EXCEPT AS SPECIFICALLY AUTHORIZED IN WRITING BY LUMEX INC., THE HOLDER OF THIS DOCUMENT SHALL KEEP ALL INFORMATION CONTAINED HEREIN CONFIDENTIAL AND SHALL PROTECT SAME IN WHOLE OR IN PART FROM DISCLOSURE AND DISSEMINATION TO ALL THIRD PARTIES.

DATE : 2020.08.10	DRAWN BY : E.C.
PAGE : 1 OF 1	CHKD BY : E.C.
SCALE : NTF	APRVD BY : G.Y.
UNIT : mm [INCH]	Pb

Downloaded from Arrow.com.