Never stop thinking

IFX52001

Constant Current Relay Driver

IFX52001EJ

Datasheet

Rev.1.0, 2011-03-31

Standard Power

Downloaded from Arrow.com.

Table of Contents

1 Overview 3

2 Block Diagram 4

3 Pin Configuration 5
3.1 Pin Assignment 5
3.2 Pin Definitions and Functions 5

4 General Product Characteristics 6
4.1 Absolute Maximum Ratings 6
4.2 Functional Range 7
4.3 Thermal Resistance 7

5 Operation Modes 8
5.1 Description 8
5.2 Electrical Characteristics Tables 10

6 Package Outlines 12

7 Revision History 13

Downloaded from Arrow.com.

1 Overview

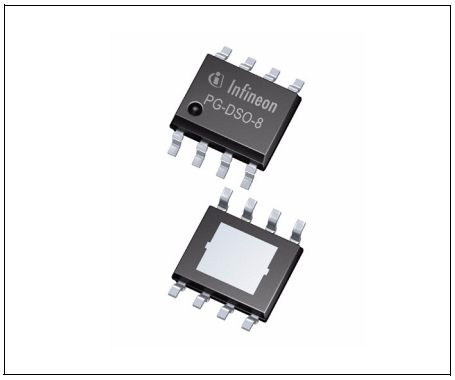

PG-DSO-8 (exposed pad)

Features

- Reduces relay hold current to min. 40 mA
- Functional at low battery voltage.
- Active freewheeling path using relay integrated freewheeling resistor.
- Over temperature protection
- Green Product (RoHS compliant)

Description

The IFX52001 is intended to drive relays with a constant current in order to reduce the coil current during relay hold phase. For relay activation, the IC pass element works as an activated switch for a limited period of time. After the activation time period has elapsed, the IC reduces the relay coil current to a lower constant value. Different operation modes allow adequate functionality also at very low or very high battery voltage.

The IC is suited to operate with relay coil inductance, freewheeling resistor, operating voltage and environment conditions as required in industrial applications. For more details please refer to the operation range and electrical characteristics tables.

Type	Package	Marking
IFX52001EJ	PG-DSO-8 (exposed pad)	IFX52001

Downloaded from Arrow.com.

2 Block Diagram

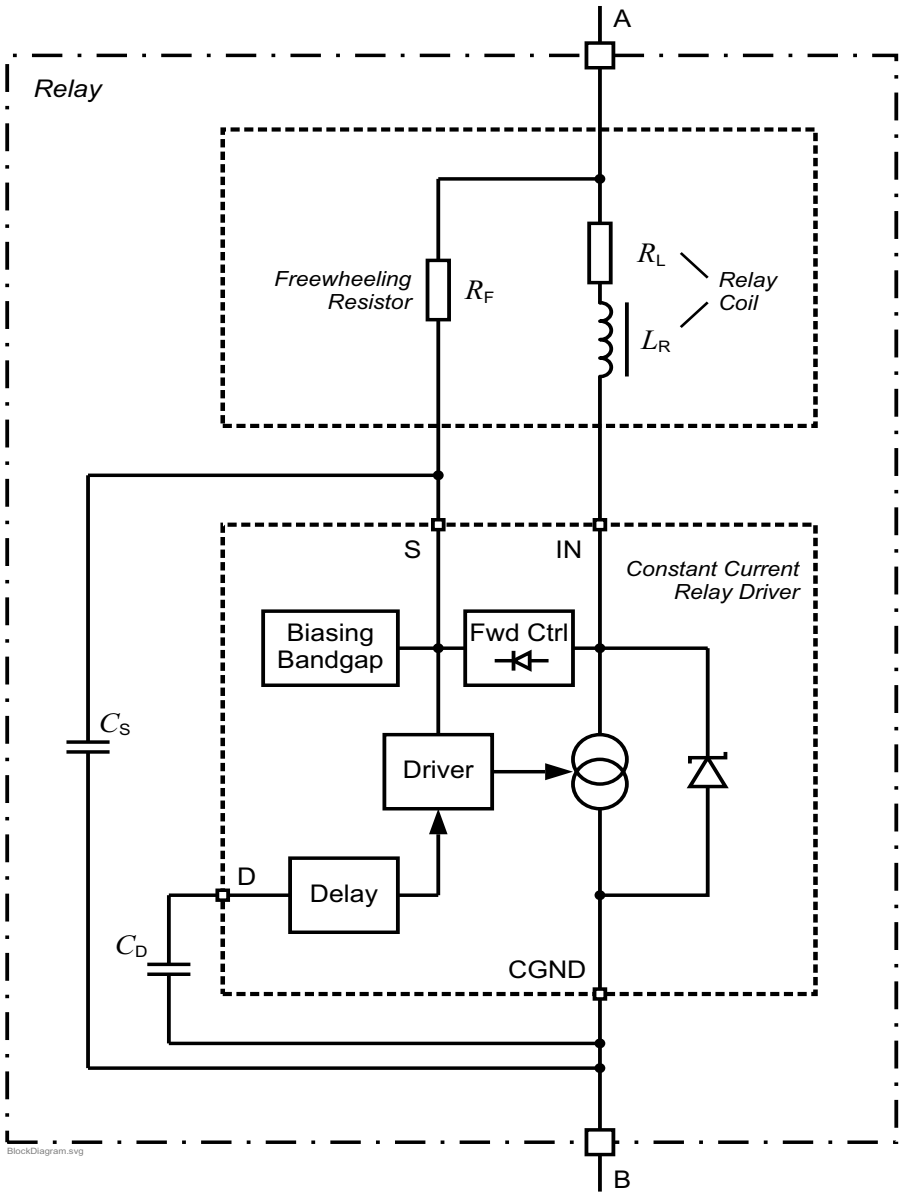

Figure 1 Block Diagram and Simplified Application Circuit

Downloaded from Arrow.com.

3 Pin Configuration

3.1 Pin Assignment

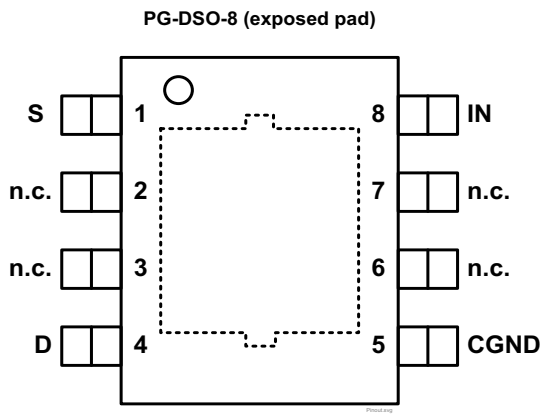

Figure 2 **Pin Configuration**

3.2 Pin Definitions and Functions

Pin	Symbol	Function
1	S	**IC Supply;** connect to relay coil freewheeling resistor according to **Figure 1**.
2, 3, 6, 7	n.c.	**Not Connected;** connection to heat sink area and CGND recommended.
4	D	**Delay;** for generating the activation time length, connect a ceramic capacitor between pin D and CGND.
5	CGND	**Relay Coil Current Output and IC Ground;**
8	IN	**Relay Coil Current Input;** connect to relay coil according to **Figure 1**.
Exposed Pad	–	**Exposed Pad;** interconnect with CGND and heat sink area on PCB.

Downloaded from Arrow.com.

4 General Product Characteristics

4.1 Absolute Maximum Ratings

Absolute Maximum Ratings [1)]

T_j = -40 ·C to +125 ·C; all voltages with respect to CGND, positive current flowing into pin (unless otherwise specified)

Pos.	Parameter	Symbol	Limit Values		Unit	Conditions
			Min.	Max.		
Pin S (IC Supply)						
4.1.1	Voltage at pin S	V_S	-0.3	45	V	$V_S > V_{IN}$ or V_{IN} open; I_S externally not limited
4.1.2	Current into pin S	I_S	-400	–	mA	V_S < -0.3V
Pin IN (Relay Coil Current Input)						
4.1.3	Voltage at pin IN	V_{IN}	-0.3	30	V	$V_S > V_{IN}$ or V_S open; I_{IN} externally not limited
4.1.4	Current into pin IN	I_{IN}	-250	400	mA	–
Pin D (Delay)						
4.1.5	Voltage at pin D	V_D	-0.3	6.8	V	
Temperatures						
4.1.6	Junction Temperature	T_j	-40	150	°C	–
4.1.7	Storage Temperature	T_{stg}	-55	150	°C	–
ESD Susceptibility						
4.1.8	ESD Resistivity to CGND	$V_{ESD,HBM}$	-2	2	kV	HBM[2)]
4.1.9	ESD Resistivity middle pins	$V_{ESD,CDM}$	-1	1	kV	CDM[3)]

1) Not subject to production test, specified by design.
2) ESD susceptibility, Human Body Model “HBM” according to EIA/JESD 22-A114B
3) ESD susceptibility, Charged Device Model “CDM” according to EIA/JESD22-C101 or ESDA STM5.3.1

Note: Stresses above the ones listed here may cause permanent damage to the device. Exposure to absolute maximum rating conditions for extended periods may affect device reliability.
Integrated protection functions are designed to prevent IC destruction under fault conditions described in the data sheet. Fault conditions are considered as “outside” normal operating range. Protection functions are not designed for continuous repetitive operation.

Downloaded from Arrow.com.

4.2 Functional Range

Pos.	Parameter	Symbol	Limit Values		Unit	Conditions
			Min.	Max.		
4.2.10	Supply Voltage	V_S	3	30	V	–
4.2.11	Input Capacitance	C_S	70	–	nF	typ. 100nF/50V recommended for compensating line influences
4.2.12	Delay Capacitance	C_D	250	–	nF	typ. 470nF/6.3V recommended
4.2.13	Junction Temperature	T_j	-40	125	°C	–
4.2.14	Relay Coil Inductance	L_R	–	1000	mH	–
4.2.15	Relay Coil Series Resistance	R_L	60	120	Ω	–
4.2.16	Relay Freewheeling Resistor	R_F	420	750	Ω	–

Note: Within the functional range the IC operates as described in the circuit description. The electrical characteristics are specified within the conditions given in the related electrical characteristics table.

4.3 Thermal Resistance[1)]

Pos.	Parameter	Symbol	Limit Values			Unit	Conditions
			Min.	Typ.	Max.		
PG-DSO-8 (exposed pad):							
4.3.1	Junction to Case Bottom	R_{thJC}	–	10	–	K/W	–
4.3.2	Junction to Ambient	R_{thJA}	–	70	–	K/W	1)

1) EIA/JESD 52_2, FR4, 80 × 80 × 1.5 mm; 35µ Cu, 5µ Sn; 300 mm^2

1) Not subject to production test, specified by design.

Downloaded from Arrow.com.

5 Operation Modes

5.1 Description

The IFX52001 provides two different operation modes: For relay activation, the IC pass element works as an activated switch with lowest dropout voltage V_{DR} (see Figure 3 a). After the activation time period t_{Actv} has elapsed, the IC switches to hold mode regulating the relay coil current to constant values (see Figure 3 b).

During commutation, the relay coil current flows from the IC input “IN” to “S” into the relay freewheeling resistor. A zener structure prevents the IC from overvoltage by limiting the input voltage transient to V_Z.

The relay activation time period t_{Actv} is generated by charging the external capacitor C_D at pin D with a constant current. This time period starts once the IC supply voltage exceeds $V_{S,Start}$. In case the IC supply voltage V_S falls below the threshold $V_{S,Hold\text{-}Actv}$, the IC changes to active mode allowing maximum relay current flow at low vehicle battery voltage.

At low supply voltage, the IC switches to “Low Voltage Mode” with lowest current consumption. As in activation mode, the IC is working as a switch with lowest dropout voltage.

In order to prevent the IC from excessive power dissipation at high supply voltage, the IC is working as a switch (High Voltage Mode). A transition to Hold Mode during this mode is not possible.

An overtemperature protection circuit prevents the IC from immediate destruction under fault conditions by reducing the output current. A thermal balance below 200 °C junction temperature will be established. Please note that a junction temperature above 150 °C is outside the maximum ratings and reduces the IC lifetime.

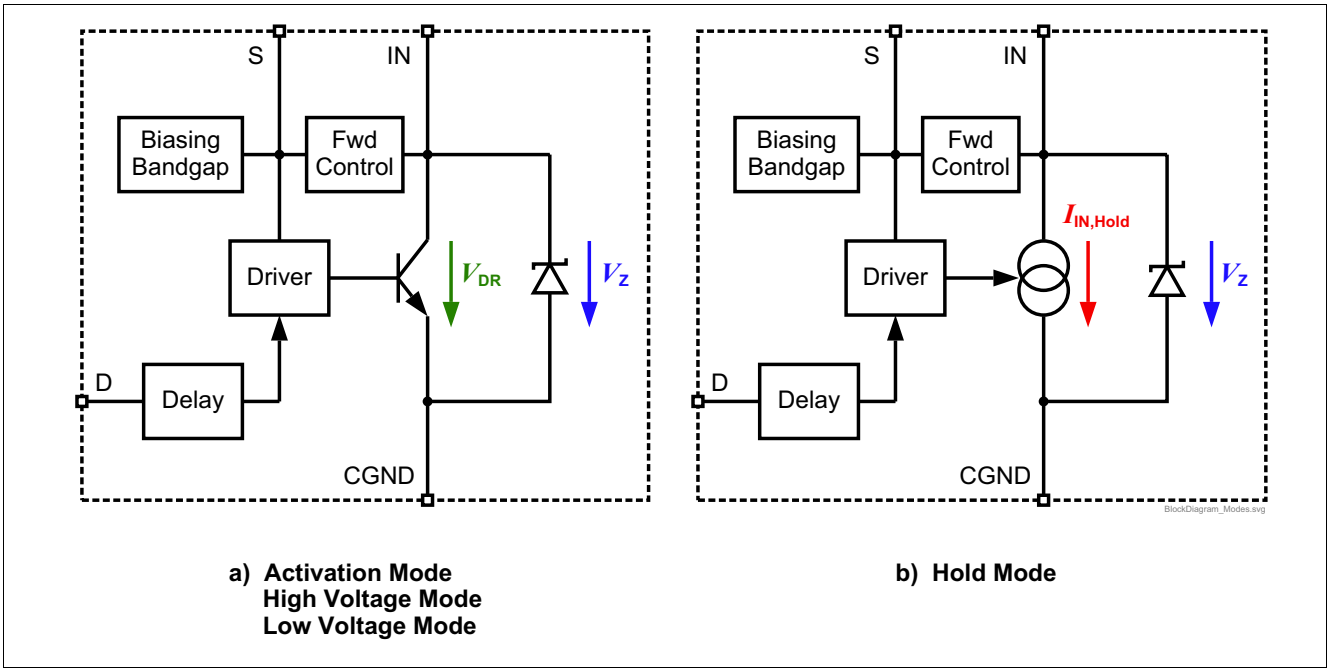

Figure 3 Operation as switch or current source

Downloaded from Arrow.com.

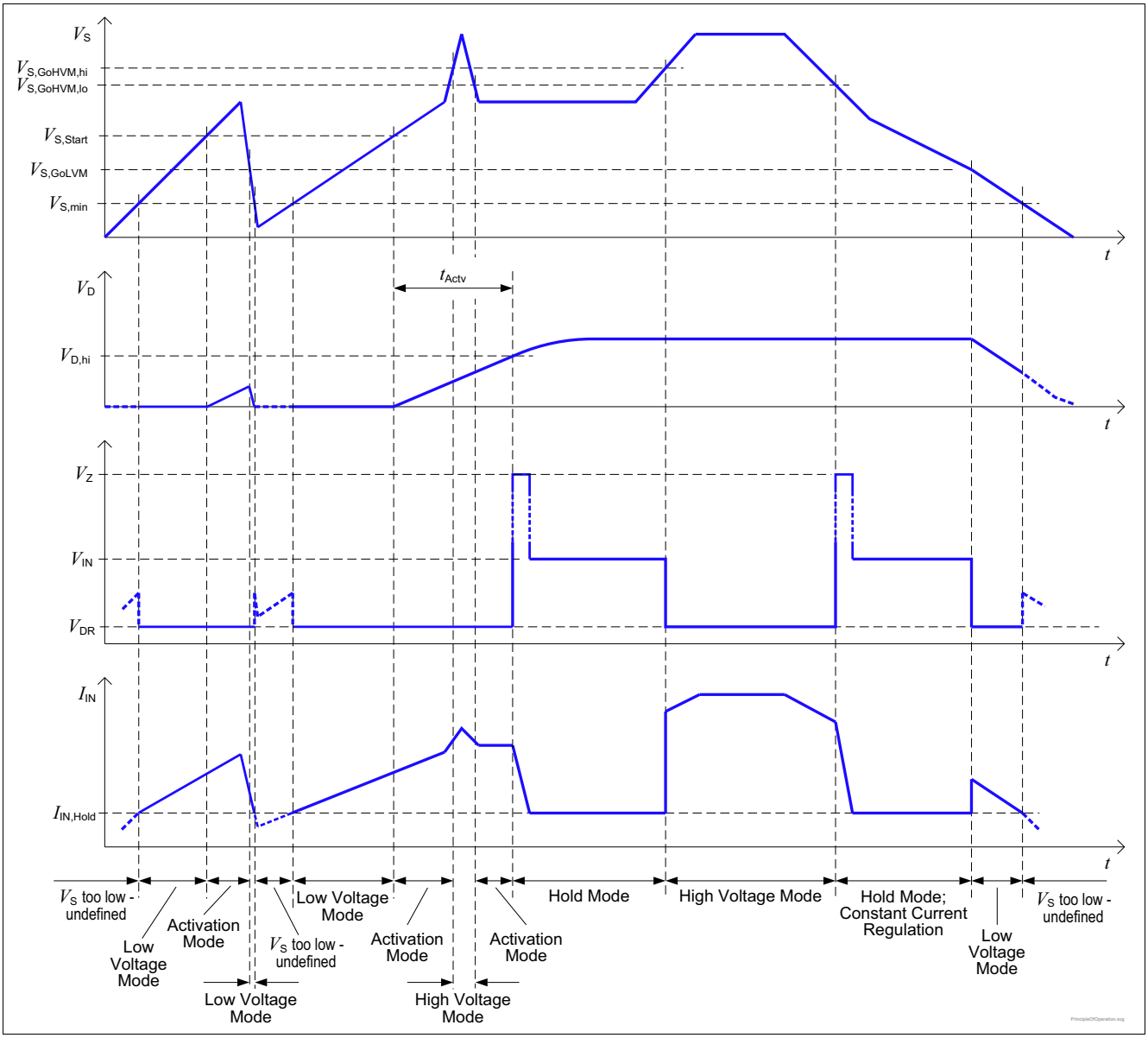

Figure 4 Principle of Operation

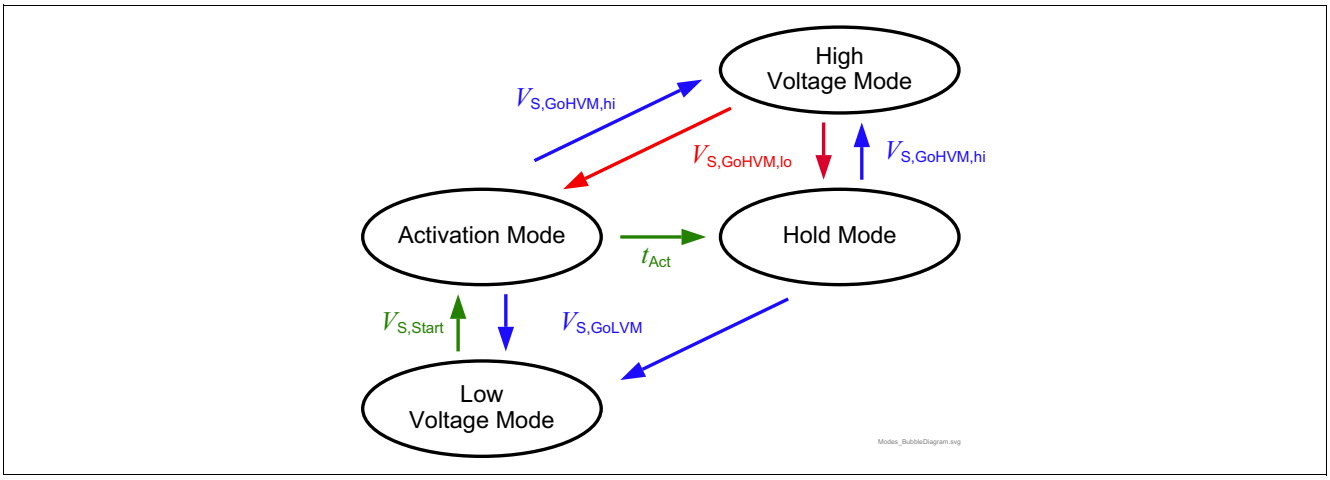

Figure 5 Conditions of transition between modes, definition of parameters

Downloaded from Arrow.com.

5.2 Electrical Characteristics Tables

T_j = -40 ·C to +125 ·C,
all voltages with respect to ground, positive current flowing into pin (unless otherwise specified)

Pos.	Parameter	Symbol	Limit Values			Unit	Conditions
			Min.	Typ.	Max.		
General							
5.2.1	Freewheeling path drop voltage	V_{IN-S}		1	2	V	I_{IN-S} = 400 mA
5.2.2	Input Zener Voltage	V_Z	30		45	V	I_Z = 50 mA
5.2.3	Overtemperature Shutdown Threshold [1)]	$T_{j,sd}$	151	–	200	°C	T_j increasing due to power dissipation generated by the IC.
Activation Mode, $V_S \geq V_{S,Start}$, unless otherwise specified							
5.2.4	Activation Mode Timing Start Supply Voltage Threshold	$V_{S,Start}$	7	8	9	V	V_S increasing
5.2.5	Activation Time Period	t_{Actv}	65	100	135	ms	C_D = 470 nF
5.2.6	Dropout Voltage Activation Mode	$V_{DR,Actv}$	–	0.9	1.3	V	I_{IN} = 200 mA V_S = 9V
5.2.7	Current consumption Activation Mode	$I_{S,Actv}$	–	0.85	1.5	mA	I_{IN} = 200 mA V_S = 9V
Hold Mode, $V_{S,GoHVM} \geq V_S \geq V_{S,GoLVM}$, unless otherwise specified							
5.2.8	Relay coil hold current	$I_{IN,Hold}$	40	50	60	mA	–
5.2.9	Current consumption Hold Mode	$I_{S,Hold}$	–	0.85	1.5	mA	V_S = 9V
			–	1	1.8	mA	V_S = 18V
Low Voltage Mode, $V_{S,Start} \geq V_S \geq$ 3 V, unless otherwise specified							
5.2.10	Go to Low Voltage Mode Threshold	$V_{S,GoLVM}$	6	7	8	V	V_S decreasing
5.2.11	Go to Low Voltage Mode Hysteresis	$V_{S,GoLVM,hy}$	0.7	1	–	V	Calculated value: $V_{S,GoLVM,hy}$ = $V_{S,Start}$ - $V_{S,GoLVM}$
5.2.12	Dropout voltage Low Voltage Mode	$V_{DR,LVM}$	–	0.85	1.3	V	I_{IN} = 40 mA
5.2.13	Dropout voltage Low Voltage Mode	$V_{DR,LVM}$	–	0.85	1.0	V	I_{IN} = 40 mA; T_j = 25°C
5.2.14	Current consumption Low Voltage Mode	$I_{S,LVM}$	–	0.65	1.1	mA	V_S = 3V; I_{IN} = $I_{IN,Hold}$
			–	0.85	1.4	mA	V_S = 7V; I_{IN} = $I_{IN,Hold}$

Downloaded from Arrow.com.

T_j = -40 ·C to +125 ·C,
all voltages with respect to ground, positive current flowing into pin (unless otherwise specified)

Pos.	Parameter	Symbol	Limit Values			Unit	Conditions
			Min.	Typ.	Max.		
High Voltage Mode, $V_S \geq V_{S,GoHVM,}$, unless otherwise specified							
5.2.15	Go to High Voltage Mode Upper Threshold	$V_{S,GoHVM,hi}$	19	–	21	V	V_S increasing
5.2.16	Go to High Voltage Mode Lower Threshold	$V_{S,GoHVM,lo}$	18	–	20	V	V_S decreasing
5.2.17	Go to High Voltage Mode Hysteresis	$V_{S,GoHVM,hy}$	0.7	1	–	V	Calculated value: $V_{S,GoHVM,hy}$ = $V_{S,GoHVM,hi}$ - $V_{S,GoHVM,lo}$
5.2.18	Dropout Voltage High Voltage Mode	$V_{DR,HVM}$	–	1.1	1.6	V	I_{IN} = 400 mA; V_S = 28V
5.2.19	Current Consumption High Voltage Mode	$I_{S,HVM}$	–	1	1.8	mA	I_{IN} = 400 mA; V_S = 28V

1) Specified by design, not subject to production test.

Downloaded from Arrow.com.

6 Package Outlines

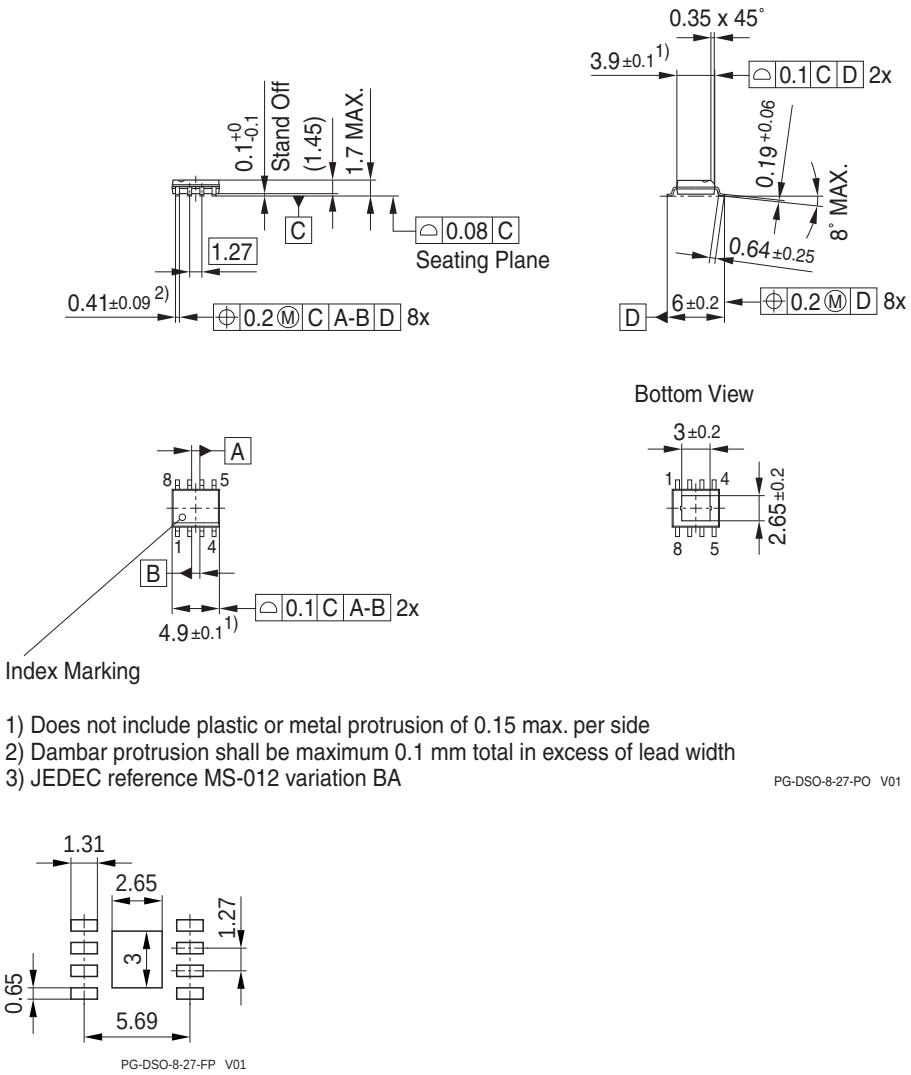

Figure 6 PG-DSO-8 (exposed pad) Outline and recommended footprint for reflow soldering

Green Product

To meet the world-wide customer requirements for environmentally friendly products and to be compliant with government regulations the device is available as a green product. Green products are RoHS-Compliant (i.e Pb-free finish on leads and suitable for Pb-free soldering according to IPC/JEDEC J-STD-020).

For further information on Infineon packages, please visit our website:
http://www.infineon.com/packages.

Dimensions in mm

Downloaded from Arrow.com.

7 Revision History

Revision	Date	Changes
1.0	2011-03-31	Initial Datasheet

Downloaded from Arrow.com.

Edition 2011-03-31

Published by
Infineon Technologies AG
81726 Munich, Germany

© 2011 Infineon Technologies AG
All Rights Reserved.

Legal Disclaimer

The information given in this document shall in no event be regarded as a guarantee of conditions or characteristics. With respect to any examples or hints given herein, any typical values stated herein and/or any information regarding the application of the device, Infineon Technologies hereby disclaims any and all warranties and liabilities of any kind, including without limitation, warranties of non-infringement of intellectual property rights of any third party.

Information

For further information on technology, delivery terms and conditions and prices, please contact the nearest Infineon Technologies Office (**www.infineon.com**).

Warnings

Due to technical requirements, components may contain dangerous substances. For information on the types in question, please contact the nearest Infineon Technologies Office.

The Infineon Technologies component described in this Data Sheet may be used in life-support devices or systems and/or automotive, aviation and aerospace applications or systems only with the express written approval of Infineon Technologies, if a failure of such components can reasonably be expected to cause the failure of that life-support automotive, aviation and aerospace device or system or to affect the safety or effectiveness of that device or system. Life support devices or systems are intended to be implanted in the human body or to support and/or maintain and sustain and/or protect human life. If they fail, it is reasonable to assume that the health of the user or other persons may be endangered.

Downloaded from Arrow.com.