MBC41 Series

Ultra-Low Profile Open Frame Power Supplies
Medical

Not For New Design
Please refer to exact equivalent product series
MULP40

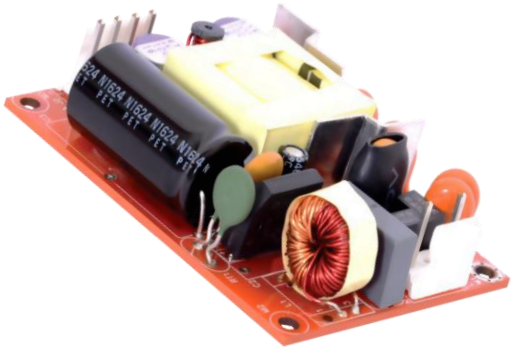

The MBC41 Series of ultra-low open frame medical power supplies feature a wide universal AC input range of 85 V – 264 VAC, offering output power 40 W with natural convection cooling. They are available in a variety of isolated single output voltages. The MBC41 ultra low profile series is also available in a PCB mount format, facilitating simple embedded integration onto user's main PCB assembly.

The MBC Series is designed and approved to the latest medical standards (EN/IEC 60601-1), providing 2 x MOPP isolation for Class I & Class II applications.

These power supplies are ideal for medical, telecom, datacom, industrial equipment and other applications.

RoHS Compliant

Key Features & Benefits

- 3 x 2 x 0.75 Inch Form factor
- PCB Mount option available
- 40 Watts Convection
- Approved to EN/IEC 60601-1
- Efficiencies 85% Typical
- -40 to 70 °C operating temperature
- Dual fusing
- 2 million hours, Telcordia -SR332-issue 3 MTBF
- No Load Power < 0.3 W
- Medical (BF) Safety Approvals

Applications

- Diagnostic
- Drug Pump
- Monitoring
- Dialysis
- Home Health Care
- Portable Equipment

NOT FOR NEW DESIGN

bel POWER SOLUTIONS & PROTECTION
a bel group

belfuse.com/power-solutions

Please read our datasheet & drawing disclaimer here.

Downloaded from Arrow.com.

1. MODEL SELECTION

MODEL NUMBER[1]	CONNECTOR	VOLTAGE	MAX. LOAD	MIN. LOAD	RIPPLE & NOISE[2]
MBC41-1T05L MBC41-1005L MBC41-1005P	Screw Terminal Header PCB Mount	5 V	5 A	0.0 A	1.5%
MBC41-1T12L MBC41-1012L MBC41-1012P	Screw Terminal Header PCB Mount	12 V	3.33 A	0.0 A	1%
MBC41-1T15L MBC41-1015L MBC41-1015P	Screw Terminal Header PCB Mount	15 V	2.67 A	0.0 A	1%
MBC41-1T24L MBC41-1024L MBC41-1024P	Screw Terminal Header PCM Mount	24 V	1.67 A	0.0 A	1%
MBC41-1T30L MBC41-1030L MBC41-1030P	Screw Terminal Header PCB Mount	30 V	1.33 A	0.0 A	1%
MBC41-1T48L MBC41-1048L MBC41-1048P	Screw Terminal Header PCB Mount	48 V	0.83 A	0.0 A	1%
MBC41-1T58L MBC41-1058L MBC41-1058P	Screw Terminal Header PCB Mount	58 V	0.69 A	0.0 A	1%
COVER-41-XBC[3]	Metal cover kit accessory				

1 For Class II Option (without input Earth pin) add suffix: -2 (e.g.: MBC41-1012L-2).
2 Ripple is peak to peak with 20 MHz bandwidth and 10 µF (Electrolytic capacitor) in parallel with a 0.1 µF capacitor at rated line voltage and load ranges.
3 When used in Cover Kit, de-rate output power to 70 % under all operating conditions.
Note: Cover Kit is not suited for PCB mount version.

2. INPUT SPECIFICATIONS

Specifications are for nominal input voltage, 25°C unless otherwise stated.

PARAMETER	DESCRIPTION / CONDITION	SPECIFICATION
Input Voltage	Universal	85 - 264 VAC / 390 VDC
Input Frequency		47 - 63 Hz
Input Current	115 VAC: 230 VAC:	0.8 A max. 0.4 A max.
No Load Power	Typical	< 0.3 W
Inrush Current	115 VAC: 230 VAC: 264 VAC:	25 A 45 A 75 A
Leakage Current	Typical (N.A. For Class II Option) Touch current	300 A µA < 100 µA
Switching Frequency	Typical	65 kHz

Downloaded from Arrow.com.

3. OUTPUT SPECIFICATIONS

PARAMETER	DESCRIPTION / CONDITION	SPECIFICATION
Output Power	Convection cooling	40 W
Efficiency	Typical	85%
Hold-up Time	230 VAC:	6 ms
Line Regulation		± 0.5%
Load Regulation		± 1%
Transient Response	25% step load change, at 0.1 A/ µs slew rate, 50% duty cycle, 50 Hz = 4%	recovery time < 5 ms
Rise Time	Typical	50 ms
Set Point Tolerance		2% (3% for 5 V model)
Over Current Protection		> 110%
Over Voltage Protection		110 to 140%
Short Circuit Protection	Hiccup mode	
Cooling	Convection	

4. ENVIRONMENTAL SPECIFICATIONS

PARAMETER	DESCRIPTION / CONDITION	SPECIFICATION
Operating Temperature [4]	-40 to 0°C startup is guaranteed with spec deviation	-40 to +70°C
Storage Temperature		-40 to +85°C
Relative Humidity	Non-condensing	5% to 95%
Altitude	Operating: Non-operating:	16,000 ft 40,000 ft.
MTBF	Telcordia -SR332-issue 3	2 million hours

[4] Output ripple can be more than 10% of the output voltage.

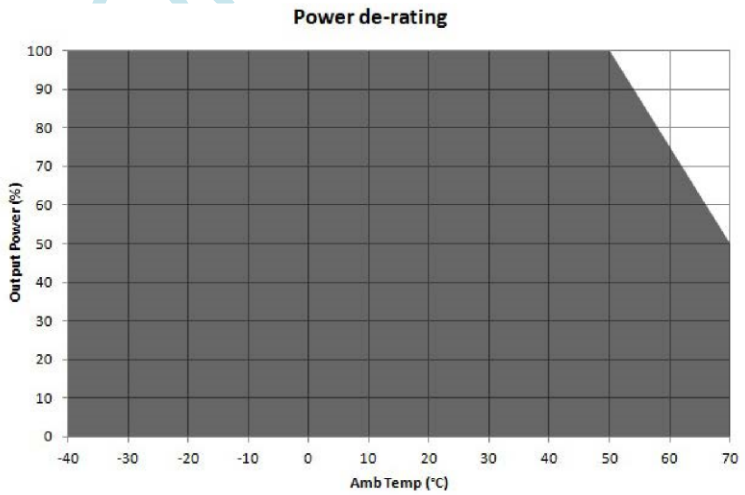

Figure 1. Derating Curve for all Outputs

De-rate linearly from 100% at 50°C to 50% at 70°C

© 2022 Bel Power Solutions & Protection

Downloaded from Arrow.com.

5. EMC SPECIFICATIONS

PARAMETER	DESCRIPTION / CONDITION	SPECIFICATION
Conducted Emissions	EN 55011-B, CISPR22-B, FCC PART15-B	Pass
Radiated Emissions	EN 55011 A; with external core (King core K5B RC 25x12x15-M in input cable)	Pass Level B
Input Current Harmonics	EN 61000-3-2	Class A
Voltage Fluctuation and Flicker	EN 61000-3-3	Pass
ESD Immunity	EN 61000-4-2	Level 4, Criterion A
Radiated Field Immunity	EN 61000-4-3	Level 3, Criterion A
Electrical Fast Transient Immunity	EN 61000-4-4	Level 3, Criterion A
Surge Immunity	EN 61000-4-5	Level 3, Criterion A
Conducted Immunity	EN 61000-4-6	Level 3, Criterion A
Magnetic Field Immunity	EN 61000-4-8	Level 4, Criterion A
Voltage Dips, Interruptions	EN 61000-4-11	Criterion A & B

6. SAFETY SPECIFICATIONS

PARAMETER	DESCRIPTION / CONDITION	SPECIFICATION
Isolation Voltage	Input to Output: (Medical applications) Input to GND: (Not Applicable For Class II Option) Output to GND: for type BF for type B (N/A for Class II Option)	4000 VAC 1500 VAC 1500 VAC 500 VAC
Safety Standard(s)	EN 60601-1, IEC 60601-1 (ed.3), ANSI / AAMI ES 60601 - 1, CSA C22.2 No. 60601-1	
Agency Approvals	Nemko, UL, C-UL	
CE mark	Complies with LVD Directive	

7. CONNECTOR & PIN DESCRIPTION

CONNECTOR	PIN	DESCRIPTION / CONDITION		MANUFACTURER / PN	
AC Input Connector	J1 Screw Terminal / Header	Pin 1 Pin 2 Pin 3	AC Line Not Fitted AC Neutral	Tyco: 640445-3 Mating: 647402-3; Pins: 3-647409-1	(Header)
DC Output Connector	J2 Screw Terminal / Header	Pin 1, 2 Pin 3, 4	V1 +VE V1 -VE	Tyco: 640445-4 Mating: 647402-4; Pins: 3-647409-1	

8. MECHANICAL SPECIFICATIONS

PARAMETER	DESCRIPTION / CONDITION
Weight	approx. 100 g
Dimensions	76.2 x 50.8 x 19.05 mm (3 x 2 x 0.75 in)

NOT FOR NEW DESIGN

Downloaded from Arrow.com.

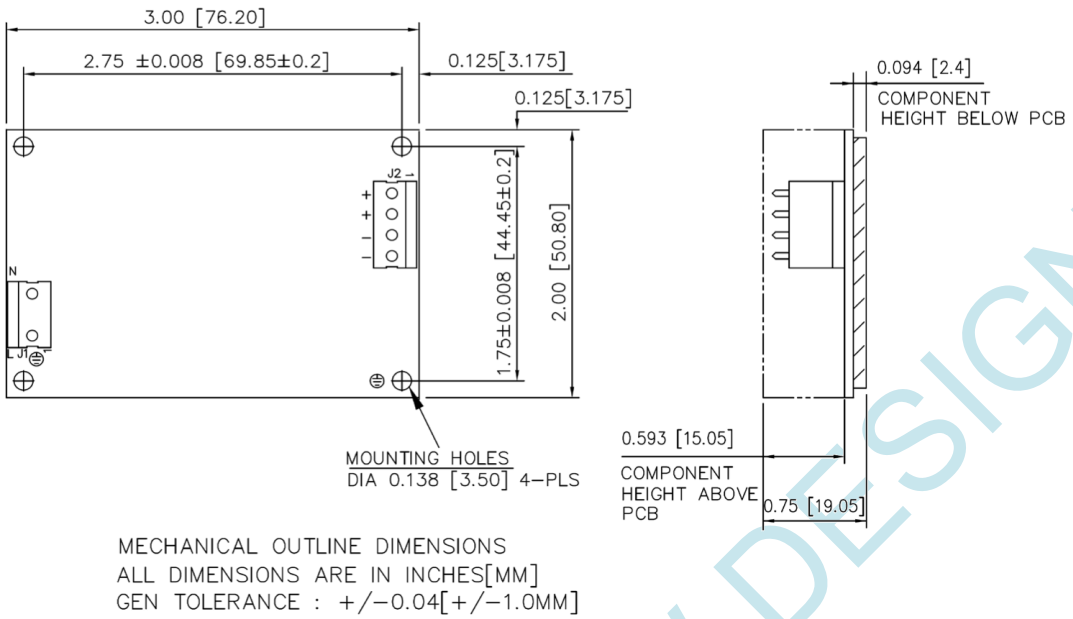

Figure 2. Mechanical Drawing – Option with Header

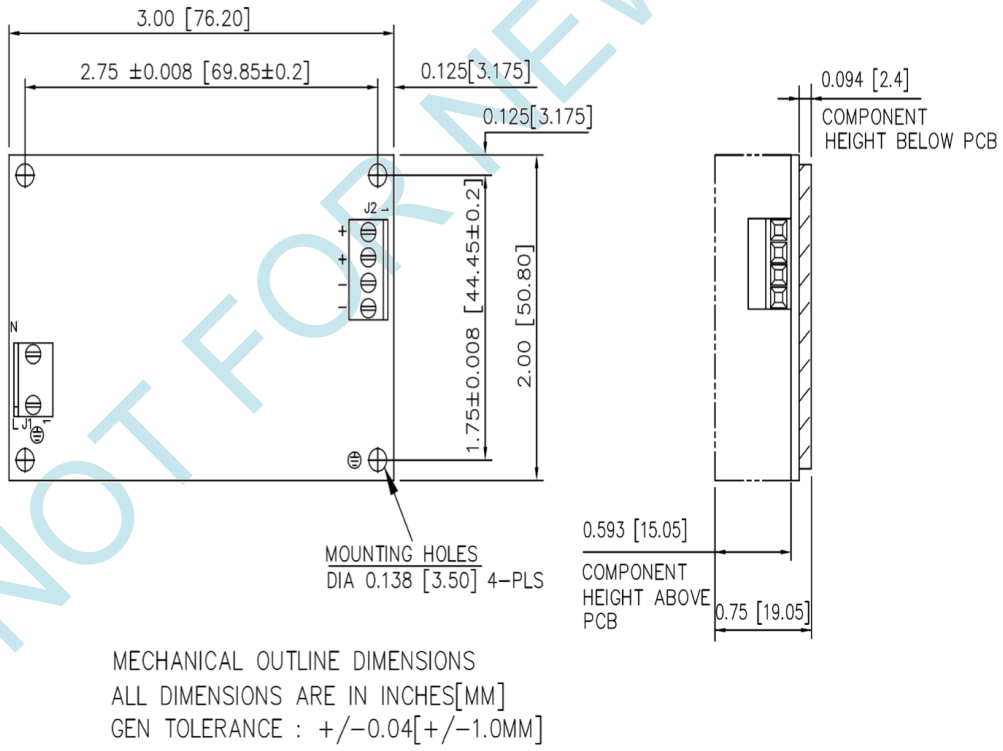

Figure 3. Mechanical Drawing – Option with Screw Terminal

NOT FOR NEW DESIGN

© 2022 Bel Power Solutions & Protection

Downloaded from Arrow.com.

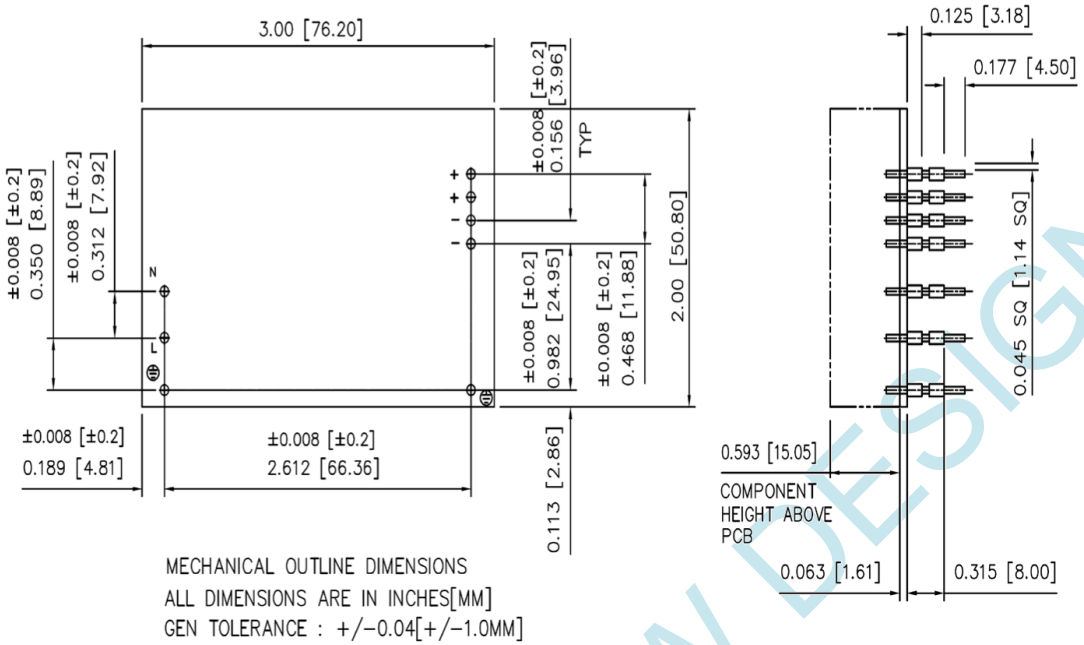

Figure 4. Mechanical Drawing – PCB Mount Option

NOTES: In case the PCB is mounted in a metal enclosure, using metal hardware ensure the following:

1. Stand off, used to mount PCB has OD of 5.4 mm max.
2. Screws, used to fix PCB on stand off, have head dia of 6.0 mm max.
3. Washer, if used, to have dia of 6.5 mm max.

NOT FOR NEW DESIGN

Downloaded from Arrow.com.

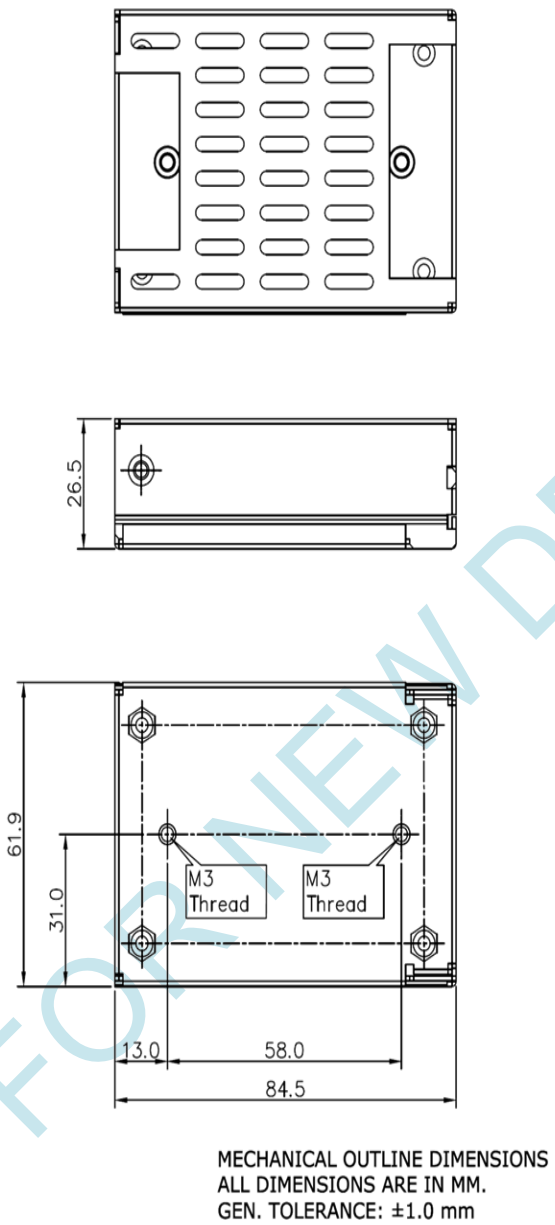

Figure 5. Mechanical Drawing – Cover Kit Option

NOT FOR NEW DESIGN

For more information on these products consult: tech.support@psbel.com

NUCLEAR AND MEDICAL APPLICATIONS - Products are not designed or intended for use as critical components in life support systems, equipment used in hazardous environments, or nuclear control systems.
TECHNICAL REVISIONS - The appearance of products, including safety agency certifications pictured on labels, may change depending on the date manufactured. Specifications are subject to change without notice.

bel POWER SOLUTIONS & PROTECTION
a bel group

Asia-Pacific +86 755 298 85888
Europe, Middle East +353 61 49 8941
North America +1 866 513 2839

© 2022 Bel Power Solutions & Protection

Downloaded from Arrow.com.