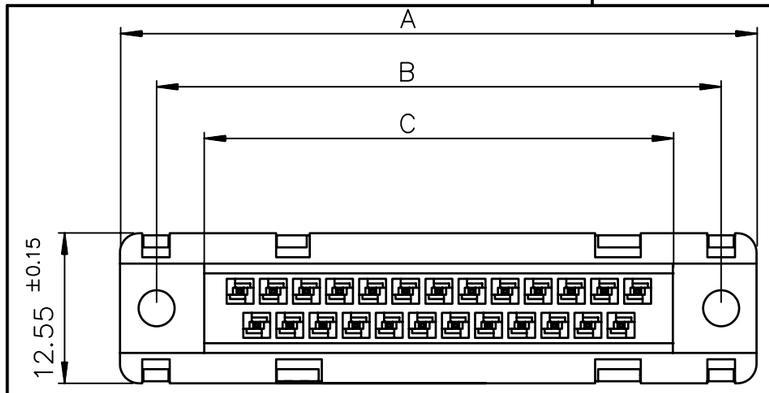

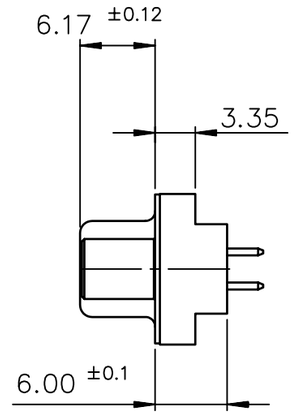

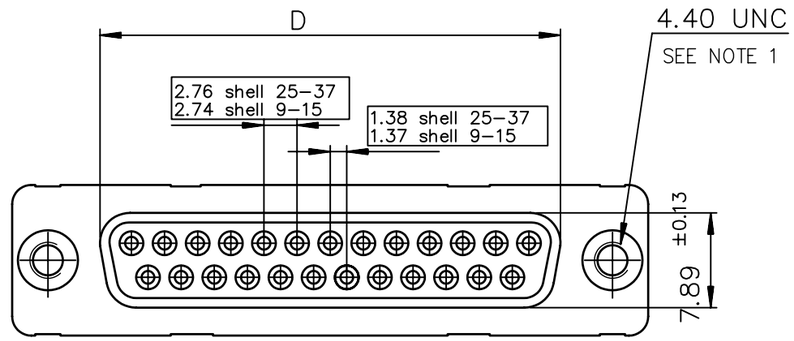

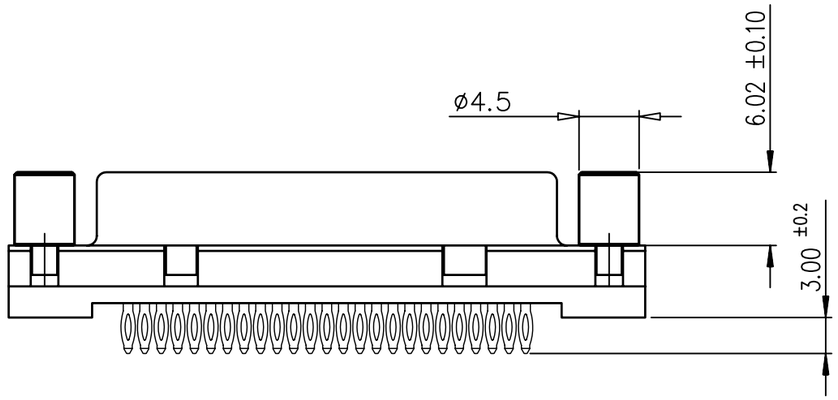

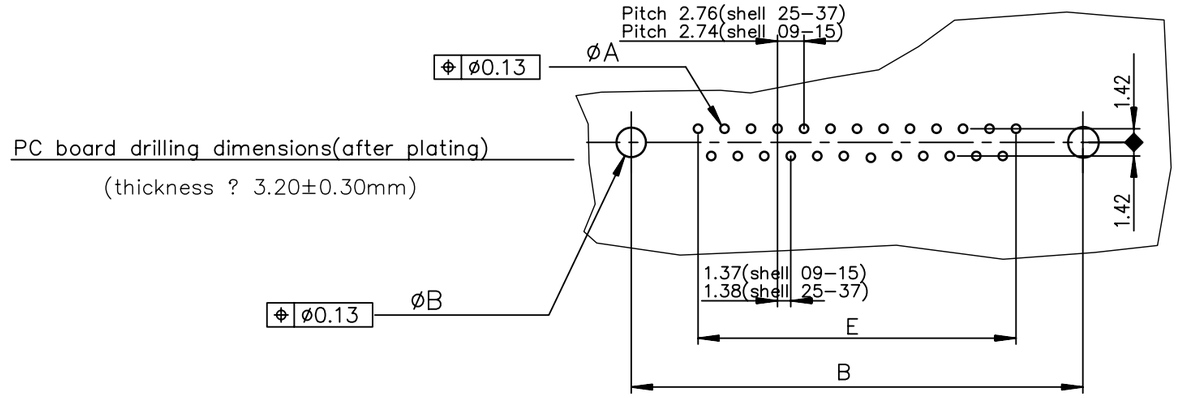

SHELL	A±0.38	B±0.12	C±0.10	D±0.25	E±0.07	TIN LEAD PART NUMBER	TIN LEAD PART NUMBER	TIN LEAD PART NUMBER	LEAD FREE PART NUMBER	LEAD FREE PART NUMBER	LEAD FREE PART NUMBER	LEAD FREE * PART NUMBER
09	30.81	24.99	16.96	16.21	10.96	D09S91C4PV00	D09S91C6PV00	D09S91C8PV00	D09S91C4PV00LF	D09S91C6PV00LF	D09S91C8PV00LF	D09S91C4PS00LF
15	39.14	33.32	25.18	24.54	19.18	D15S91C4PV00	D15S91C6PV00	D15S91C8PV00	D15S91C4PV00LF	D15S91C6PV00LF	D15S91C8PV00LF	D15S91C4PS00LF
25	53.03	47.04	39.12	38.25	33.12	D25S91C4PV00	D25S91C6PV00	D25S91C8PV00	D25S91C4PV00LF	D25S91C6PV00LF	D25S91C8PV00LF	D25S91C4PS00LF
37	69.32	63.50	55.68	54.71	49.68	D37S91C4PV00	D37S91C6PV00	D37S91C8PV00	D37S91C4PV00LF	D37S91C6PV00LF	D37S91C8PV00LF	D37S91C4PS00LF
						gold flash	0.76» gold	1.25» gold	gold flash	0.76» gold	1.25» gold	gold flash

GENERAL CHARACTERISTICS AND ROHS INFORMATIONS:

SEE DRAWING C01–8646–0001

NOTE 1

* Part numbers have Female screw with thread M2.6

rev	ecn no	dr	date
C	–	SJA	1997/02/27
D	LS05–004	LMA	2004/12/31
E	LS06–0140	LGO	2006/09/22
F	109–0153	AMR	2009/07/29
–	–	–	–
–	–	–	–
–	–	–	–

European Views

www.fciconnect.com

Dr	LELEON	1992/09/16
Eng	LELEON	1992/09/16
Chr	ABHILASH	2009/07/29
Appr	SUDHIR	2009/07/29

surface ISO 1302 ✓ | tolerance std ISO 406 ISO 1101 | projection | mm

TOLERANCES UNLESS OTHERWISE SPECIFIED

ANGULAR		LINEAR	
0.XX°	±2°	0.X	±0.1
		0.XX	±0.1
		0.XXX	±0.1

size A3 | Scale 2

ECN 109–0153

Product family D–SUB | Spec ref –

title: FEMALE CONNECTOR DELTA D
STD EUROPE STRAIGHT PRESS–FIT

dwg no C01–8646–0130 | Rev. F

catalog no – | CUSTOMER | sheet 1 of 1

REV F – 2006–04–17

Copyright FCI.

Downloaded from Arrow.com.

PDM: Rev:F STATUS: Released Printed: Jan 18, 2011