Features

- Compact Metal Case with Excellent Thermal Performance
- Full Power at Wide Output Current Range (Constant Power)
- Adjustable Output Current (AOC) with Programmability
- Isolated 1-5V/1-10V/10V PWM/3-Timer-Modes Dimmable
- Output Lumen Compensation
- Input Surge Protection: DM 6kV, CM 10kV
- All-Around Protection: OVP, SCP, OTP
- IP66/IP67 and UL Dry/Damp/Wet Location
- SELV Output
- TYPE HL, for use in a Class I, Division 2 hazardous (Classified) location
- 5 Years Warranty

Description

The *EUM-240SxxxDx* series is a 240W, constant-current, programmable and IP66/IP67 rated LED driver that operates from 90-305Vac input with excellent power factor. It is created for many lighting applications including high bay, high mast and roadway, etc. The high efficiency of these drivers and compact metal case enables them to run cooler, significantly improving reliability and extending product life. To ensure trouble-free operation, protection is provided against input surge, output over voltage, short circuit, and over temperature.

Models

Adjustable Output Current Range	Full-Power Current Range (1)	Default Output Current	Input Voltage Range(2)	Output Voltage Range	Max. Output Power	Typical Efficiency (3)	Typical Power Factor		Model Number (5)(6)
							120Vac	220Vac	
53-700mA	530-700mA	530 mA	90~305 Vac/ 127~300 Vdc	171~453Vdc	240 W	94.0%	0.99	0.96	EUM-240S070Dx(7)
70-1050mA	700-1050mA	700 mA	90~305 Vac/ 127~300 Vdc	115~343Vdc	240 W	94.0%	0.99	0.96	EUM-240S105Dx
105-1500mA	1050-1500mA	1050 mA	90~305 Vac/ 127~300 Vdc	80~229 Vdc	240 W	93.5%	0.99	0.96	EUM-240S150Dx
215-3500mA	2150-3500mA	2150 mA	90~305 Vac/ 127~300 Vdc	35~111 Vdc	240 W	93.0%	0.99	0.96	EUM-240S350Dx(4)
420-6700mA	4200-6700mA	4900 mA	90~305 Vac/ 127~300 Vdc	18~57 Vdc	240 W	92.5%	0.99	0.96	EUM-240S670Dx(4)

Notes: (1) Output current range with constant power at 240W
(2) Certified input voltage range: UL, FCC 100-277Vac; otherwise 100-240Vac.
(3) Measured at 100% load and 220Vac input (see below "General Specifications" for details).
(4) SELV output.
(5) x = G are UL Recognized, ENEC and CCC, etc. models; x = T are UL Class P models; x = B are BIS models.
(6) All the models are certificated to KS, except EUM-240S105Dx.
(7) Only available with x = G, and only with ENEC, CE, CB and CCC certificates.

Downloaded from Arrow.com.

I-V Operation Area

EUM-240S070Dx

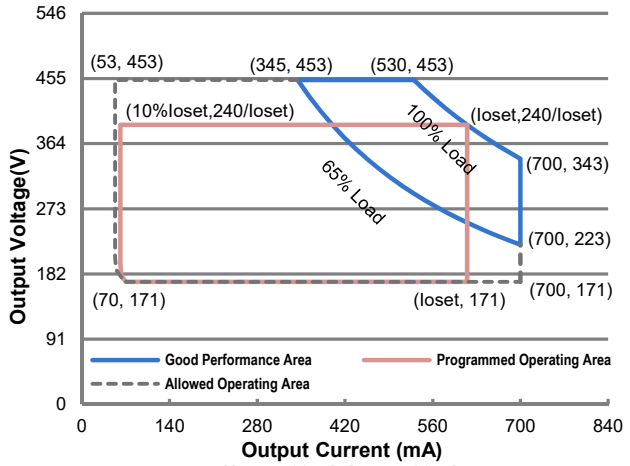

Note: 530mA≤Ioset≤700mA

EUM-240S105Dx

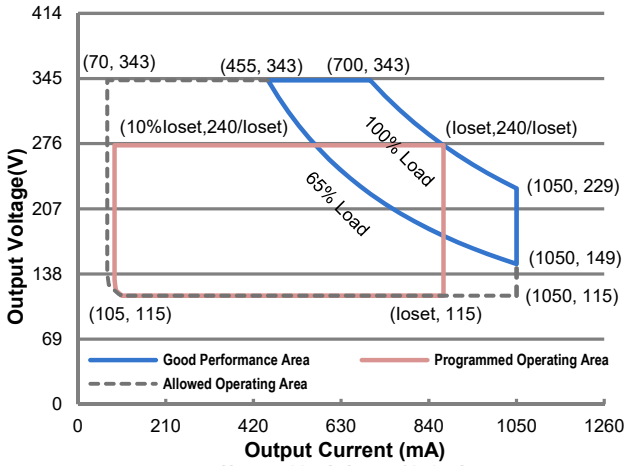

Note: 700mA≤Ioset≤1050mA

EUM-240S150Dx

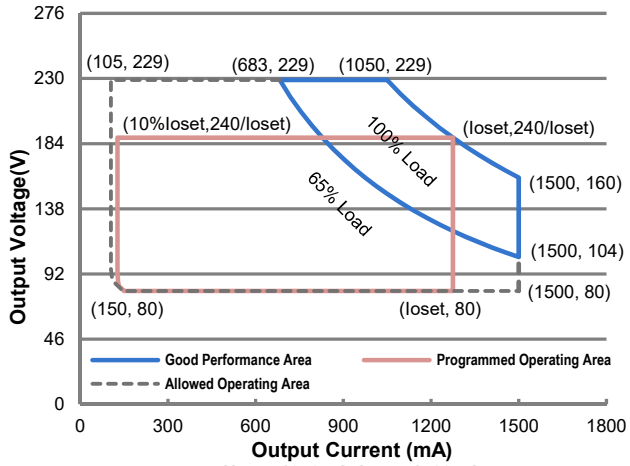

Note: 1050mA≤Ioset≤1500mA

EUM-240S350Dx

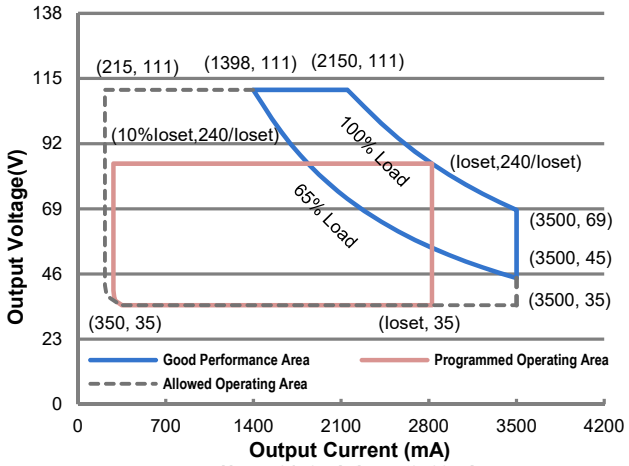

Note: 2150mA≤Ioset≤3500mA

EUM-240S670Dx

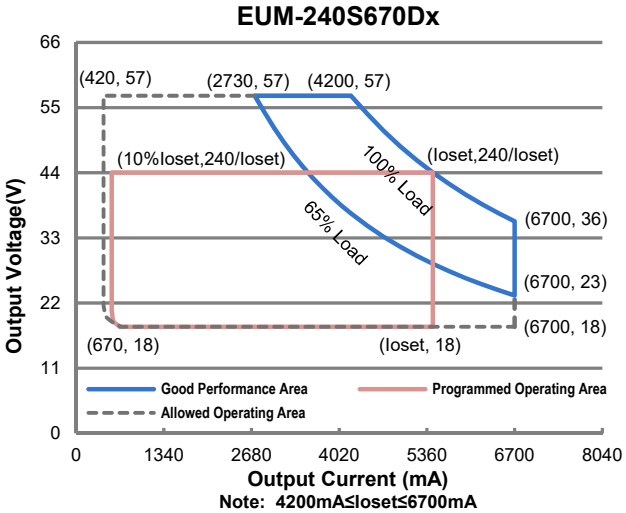

Note: 4200mA≤Ioset≤6700mA

Downloaded from Arrow.com.

Input Specifications

Parameter	Min.	Typ.	Max.	Notes
Input AC Voltage	90 Vac	-	305 Vac	
Input DC Voltage	127 Vdc	-	300 Vdc	
Input Frequency	47 Hz	-	63 Hz	
Leakage Current	-	-	0.75 MIU	UL 8750; 277Vac/60Hz
	-	-	0.70 mA	IEC 60598-1; 240Vac/60Hz
Input AC Current	-	-	2.45 A	Measured at 100% load and 120 Vac input.
	-	-	1.30 A	Measured at 100% load and 220 Vac input.
Inrush Current(I^2t)	-	-	5.43 A^2s	At 220Vac input, 25°C cold start, duration=1.34 ms, 10%Ipk-10%Ipk. See Inrush Current Waveform for the details.
PF	0.9	-	-	At 100-277Vac, 50-60Hz, 65%-100% Load (156-240W)
THD	-	-	20%	
THD	-	-	10%	At 220-240Vac, 50-60Hz, 75%-100% Load (180-240W)

Output Specifications

Parameter	Min.	Typ.	Max.	Notes
Output Current Tolerance	-5%Ioset	-	5%Ioset	At 100% load condition
Output Current Setting(Ioset) Range				
EUM-240S070Dx	53 mA	-	700 mA	
EUM-240S105Dx	70 mA	-	1050 mA	
EUM-240S150Dx	105 mA	-	1500 mA	
EUM-240S350Dx	215 mA	-	3500 mA	
EUM-240S670Dx	420 mA	-	6700 mA	
Output Current Setting Range with Constant Power				
EUM-240S070Dx	530 mA	-	700 mA	
EUM-240S105Dx	700 mA	-	1050 mA	
EUM-240S150Dx	1050 mA	-	1500 mA	
EUM-240S350Dx	2150 mA	-	3500 mA	
EUM-240S670Dx	4200 mA	-	6700 mA	
Total Output Current Ripple (pk-pk)	-	5%Iomax	10%Iomax	At 100% load condition. 20 MHz BW
Output Current Ripple at < 200 Hz (pk-pk)	-	2%Iomax	-	At 100% load condition. Only this component of ripple is associated with visible flicker.
Startup Overshoot Current	-	-	10%Iomax	At 100% load condition
No Load Output Voltage				
EUM-240S070Dx	-	-	500 V	
EUM-240S105Dx	-	-	380 V	
EUM-240S150Dx	-	-	260 V	
EUM-240S350Dx	-	-	120 V	
EUM-240S670Dx	-	-	70 V	

Downloaded from Arrow.com.

Output Specifications (Continued)

Parameter	Min.	Typ.	Max.	Notes
Line Regulation	-	-	±0.5%	Measured at 100% load
Load Regulation	-	-	±1.5%	
Turn-on Delay Time	-	-	0.5 s	Measured at 120-277Vac input, 65%-100% Load
Temperature Coefficient of Ioset	-	0.03%/°C	-	Case temperature = 0°C ~Tc max

General Specifications

Parameter	Min.	Typ.	Max.	Notes
Efficiency at 120 Vac input:				Measured at 100% load and steady-state temperature in 25°C ambient; (Efficiency will be about 2.0% lower if measured immediately after startup.)
EUM-240S070Dx				
Io= 530 mA	89.0%	91.0%	-	
Io= 700 mA	89.0%	91.0%	-	
EUM-240S105Dx				
Io= 700 mA	89.0%	91.0%	-	
Io=1050 mA	89.0%	91.0%	-	
EUM-240S150Dx				
Io=1050 mA	89.0%	91.0%	-	
Io=1500 mA	89.0%	91.0%	-	
EUM-240S350Dx				
Io=2150 mA	88.0%	90.0%	-	
Io=3500 mA	88.0%	90.0%	-	
EUM-240S670Dx				
Io=4200 mA	87.5%	89.5%	-	
Io=6700 mA	87.0%	89.0%	-	
Efficiency at 220 Vac input:				Measured at 100% load and steady-state temperature in 25°C ambient; (Efficiency will be about 2.0% lower if measured immediately after startup.)
EUM-240S070Dx				
Io= 530 mA	92.0%	94.0%	-	
Io= 700 mA	92.0%	94.0%	-	
EUM-240S105Dx				
Io= 700 mA	92.0%	94.0%	-	
Io=1050 mA	92.0%	94.0%	-	
EUM-240S150Dx				
Io=1050 mA	91.5%	93.5%	-	
Io=1500 mA	91.5%	93.5%	-	
EUM-240S350Dx				
Io=2150 mA	91.0%	93.0%	-	
Io=3500 mA	91.0%	93.0%	-	
EUM-240S670Dx				
Io=4200 mA	90.5%	92.5%	-	
Io=6700 mA	90.0%	92.0%	-	

Downloaded from Arrow.com.

General Specifications (Continued)

Parameter	Min.	Typ.	Max.	Notes
Efficiency at 277 Vac input: EUM-240S070Dx Io= 530 mA Io= 700 mA EUM-240S105Dx Io= 700 mA Io=1050 mA EUM-240S150Dx Io=1050 mA Io=1500 mA EUM-240S350Dx Io=2150 mA Io=3500 mA EUM-240S670Dx Io=4200 mA Io=6700 mA	 92.5% 92.5% 92.5% 92.5% 92.0% 92.0% 91.5% 91.0% 91.0% 90.0%	 94.5% 94.5% 94.5% 94.5% 94.0% 94.0% 93.5% 93.0% 93.0% 92.0%	 - - - - - - - - - -	Measured at 100% load and steady-state temperature in 25°C ambient; (Efficiency will be about 2.0% lower if measured immediately after startup.)
MTBF	-	228,000 Hours	-	Measured at 220Vac input, 80%Load and 25°C ambient temperature (MIL-HDBK-217F)
Lifetime	-	100,000 Hours	-	Measured at 220Vac input, 80%Load and 70°C case temperature; See lifetime vs. Tc curve for the details
Operating Case Temperature for Safety Tc_s	-40°C	-	+90°C	
Operating Case Temperature for Warranty Tc_w	-40°C	-	+80°C	Case temperature for 5 years warranty Humidity: 10% RH to 95% RH;
Storage Temperature	-40°C	-	+85°C	Humidity: 5%RH to 95%RH
Dimensions Inches (L × W × H) Millimeters (L × W × H)	 7.91 × 2.36 ×1.52 201 × 60 × 38.5			With mounting ear 8.58 × 2.36 ×1.52 218 × 60 × 38.5
Net Weight	-	950 g	-	

Dimming Specifications

Parameter		Min.	Typ.	Max.	Notes
Absolute Maximum Voltage on the Vdim (+) Pin		-20 V	-	20 V	
Source Current on Vdim (+)Pin		200 μA	300 μA	450 μA	Vdim(+) = 0 V
Dimming Output Range	EUM-240S070Dx EUM-240S105Dx EUM-240S150Dx EUM-240S350Dx EUM-240S670Dx	10%Ioset	-	Ioset	530 mA⩽ Ioset ⩽ 700mA 700 mA ⩽ Ioset ⩽ 1050 mA 1050 mA ⩽ Ioset ⩽ 1500 mA 2150 mA ⩽ Ioset ⩽ 3500 mA 4200 mA ⩽ Ioset ⩽ 6700 mA
	EUM-240S070Dx EUM-240S105Dx EUM-240S150Dx EUM-240S350Dx EUM-240S670Dx	53 mA 70 mA 105 mA 215 mA 420 mA	-	Ioset	53 mA ⩽ Ioset ⩽ 530 mA 70 mA ⩽ Ioset ＜ 700 mA 105 mA ⩽ Ioset ＜ 1050 mA 215 mA ⩽ Ioset ＜ 2150 mA 420 mA ⩽ Ioset ＜ 4200 mA
Recommended Dimming Range for 1-5V		0.25 V	-	4.75 V	Dimming mode set to 1-5V in PC interface.
Recommended Dimming Range for 1-10V		1 V	-	9 V	Default 1-10V dimming mode with positive logic.

Downloaded from Arrow.com.

Dimming Specifications (Continued)

Parameter	Min.	Typ.	Max.	Notes
PWM_in High Level	-	10V	-	
PWM_in Low Level	-	0V	-	
PWM_in Frequency Range	200 Hz	-	2 KHz	
PWM_in Duty Cycle	0%	-	100%	

Safety &EMC Compliance

Safety Category	Standard
UL/CUL	UL 8750,CAN/CSA-C22.2 No. 250.13
ENEC & CE	EN 61347-1, EN 61347-2-13
UKCA	BS EN 61347-1, BS EN 61347-2-13
CB	IEC 61347-1, IEC 61347-2-13
CCC	GB 19510.1, GB 19510.14
PSE	J 61347-1, J 61347-2-13
KS	KS C 7655
BIS	IS 15885(Part2/Sec13)
EAC	TP TC 004, TP TC 020
NOM	NOM-058-SCFI
SAA	AS/NZS 61347.1, AS/NZS 61347.2.13
Performance	**Standard**
ENEC	EN 62384
EMI Standards	**Notes**
BS EN/EN IEC 55015/GB/T 17743/KN 15(1)	Conducted emission Test &Radiated emission Test
BS EN/EN IEC 61000-3-2/GB 17625.1	Harmonic current emissions
BS EN/EN 61000-3-3	Voltage fluctuations & flicker
FCC Part 15(1)	ANSI C63.4 Class B
	This device complies with Part 15 of the FCC Rules. Operation is subject to the following two conditions: [1] this device may not cause harmful interference, and [2] this device must accept any interference received, including interference that may cause undesired Operation.
EMS Standards	**Notes**
BS EN/EN 61000-4-2	Electrostatic Discharge (ESD): 8 kV air discharge, 4 kV contact discharge
BS EN/EN 61000-4-3	Radio-Frequency Electromagnetic Field Susceptibility Test-RS
BS EN/EN 61000-4-4	Electrical Fast Transient / Burst-EFT

Downloaded from Arrow.com.

Safety &EMC Compliance (Continued)

EMS Standards	Notes
BS EN/EN 61000-4-5	Surge Immunity Test: AC Power Line: Differential Mode 6 kV, Common Mode 10 kV
BS EN/EN 61000-4-6	Conducted Radio Frequency Disturbances Test-CS
BS EN/EN 61000-4-8	Power Frequency Magnetic Field Test
BS EN/EN 61000-4-11	Voltage Dips
BS EN/EN 61547	Electromagnetic Immunity Requirements Applies To Lighting Equipment

Note: (1) This LED driver meets the EMI specifications above, but EMI performance of a luminaire that contains it depends also on the other devices connected to the driver and on the fixture itself.

Derating

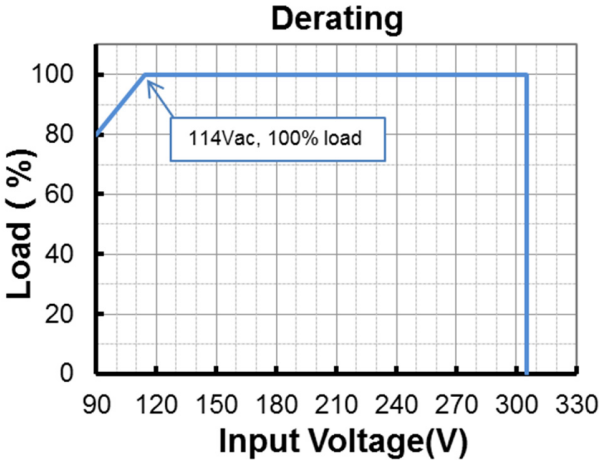

Lifetime vs. Case Temperature

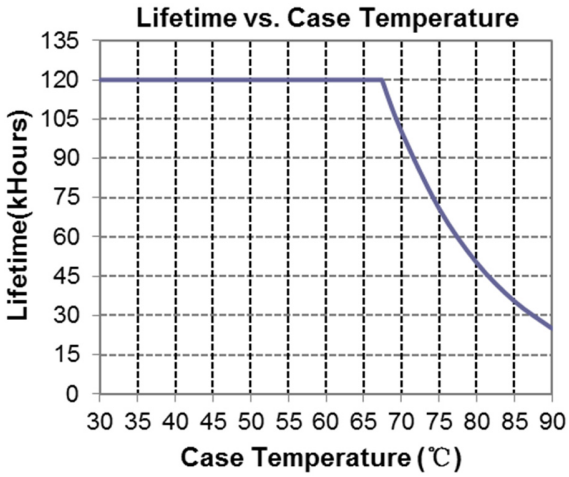

Downloaded from Arrow.com.

Inrush Current Waveform

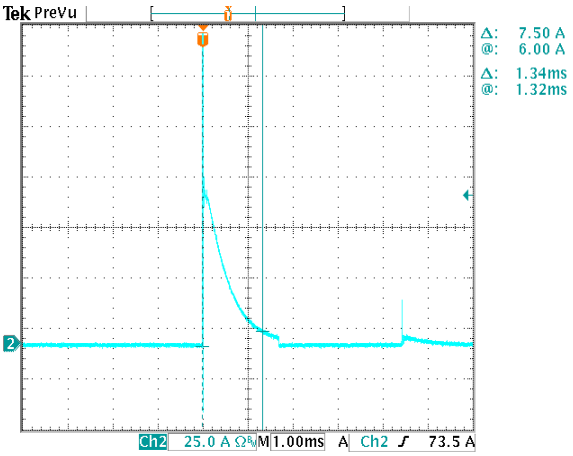

Efficiency vs. Load

EUM-240S070Dx(Io=530mA)

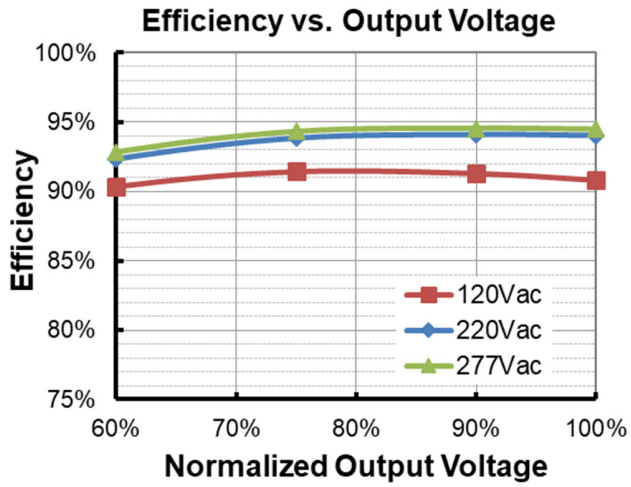

EUM-240S070Dx(Io=700mA)

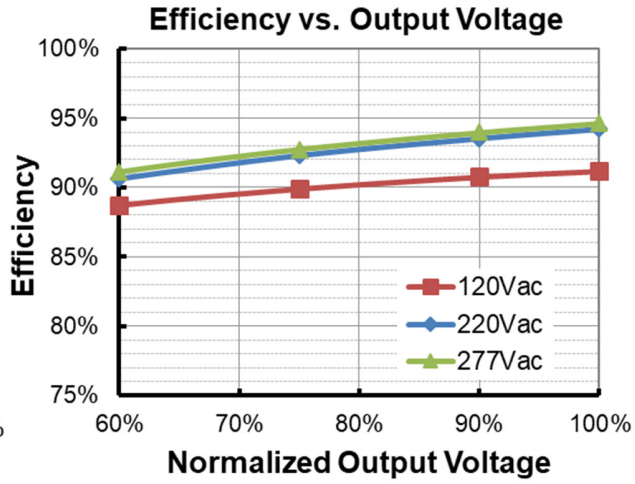

EUM-240S105Dx(Io=700mA)

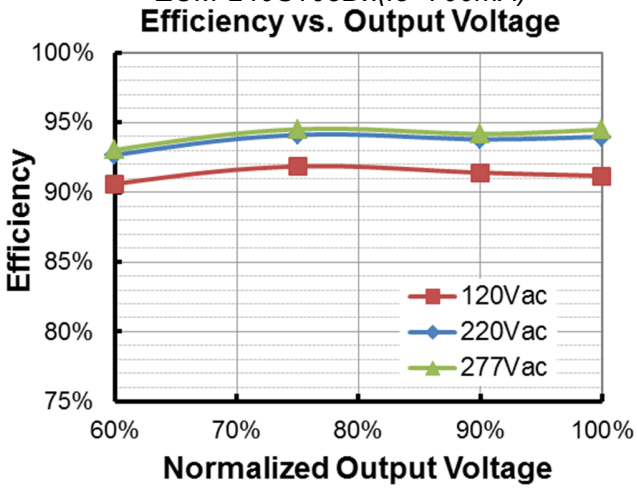

EUM-240S105Dx(Io=1050mA)

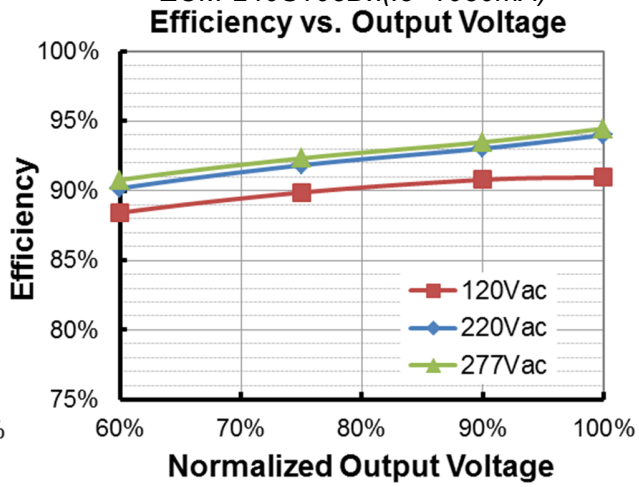

Downloaded from Arrow.com.

EUM-240S150Dx(Io=1050mA)

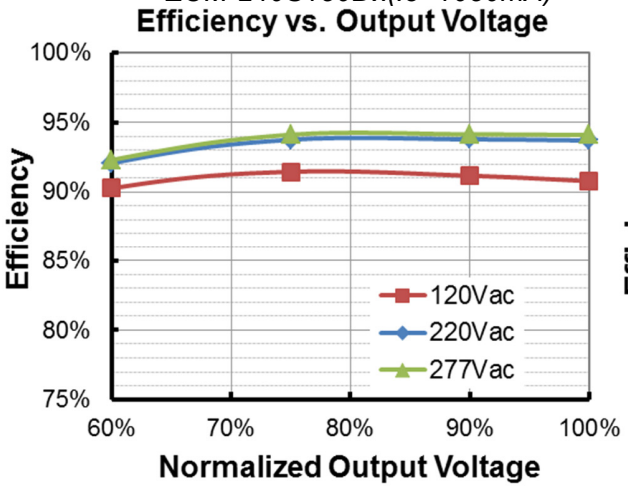

EUM-240S150Dx(Io=1500mA)

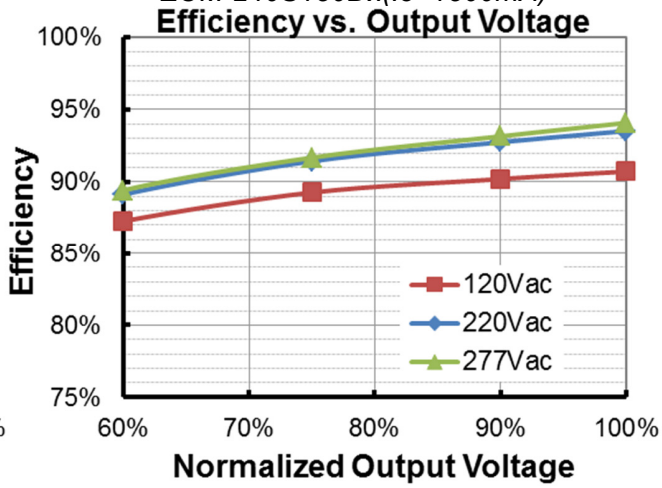

EUM-240S350Dx(Io=2150mA)

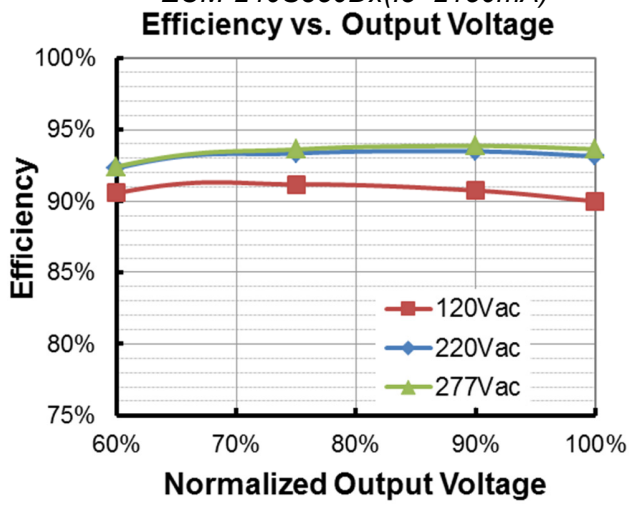

EUM-240S350Dx(Io=3500mA)

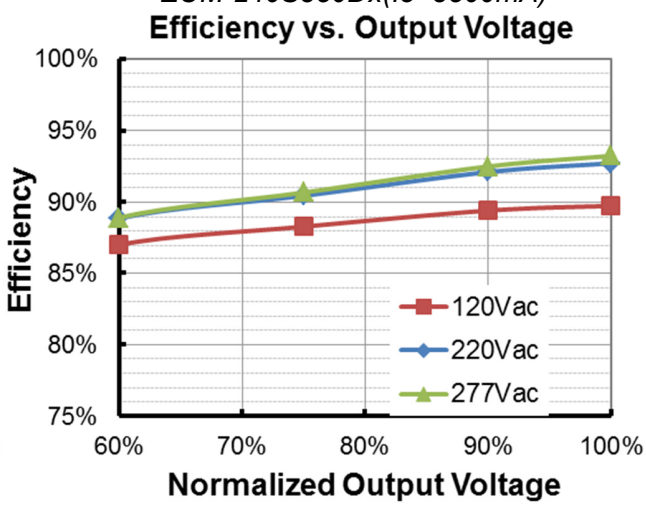

EUM-240S670Dx(Io=4200mA)

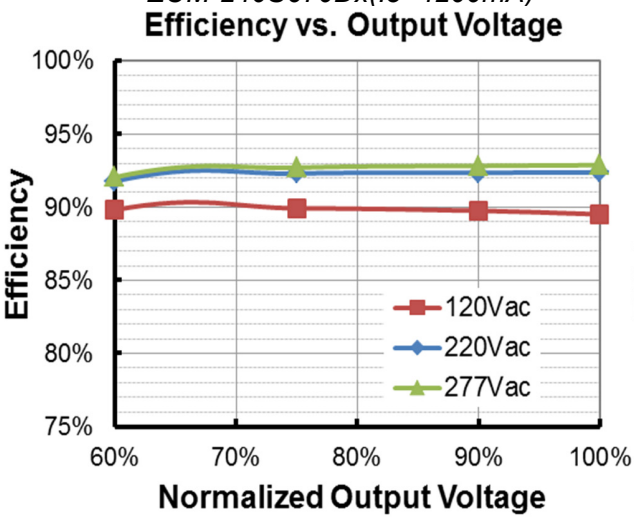

EUM-240S670Dx(Io=6700mA)

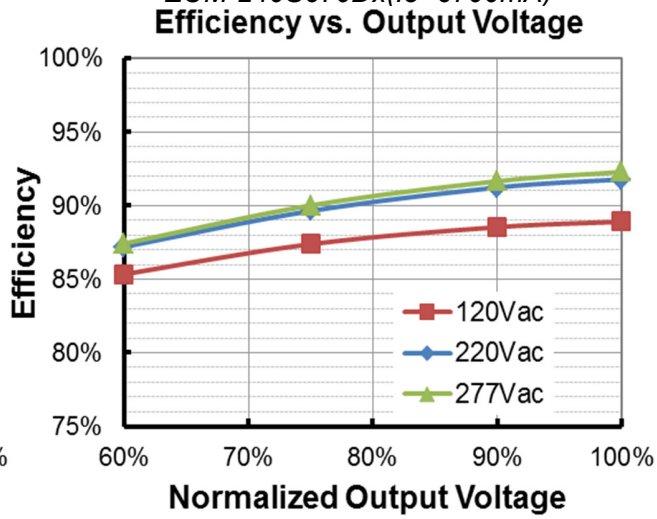

Downloaded from Arrow.com.

Power Factor

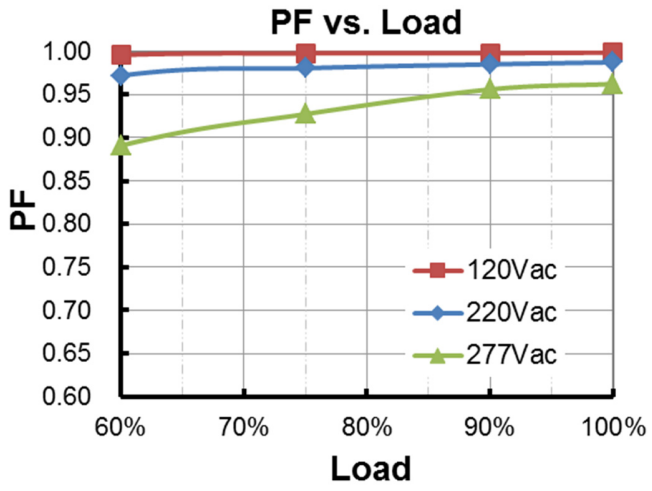

Total Harmonic Distortion

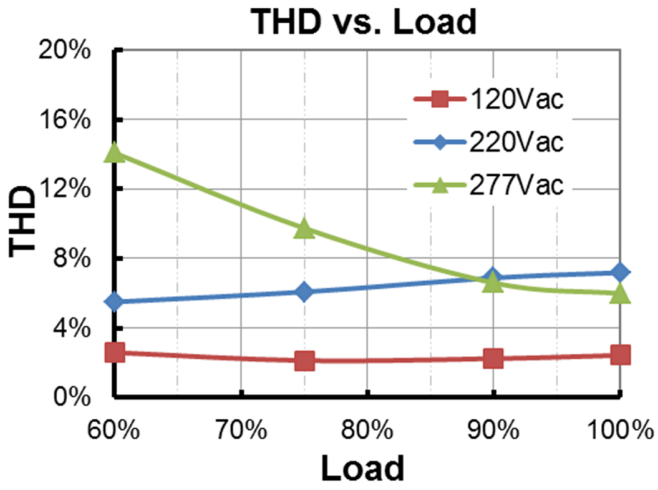

Protection Functions

Parameter	Notes
Over Temperature Protection	Decreases output current, returning to normal after over temperature is removed.
Short Circuit Protection	Auto Recovery. No damage will occur when any output is short circuited. The output shall return to normal when the fault condition is removed.
Over Voltage Protection	Limits output voltage at no load and in case the normal voltage limit fails.

Dimming

- **1-5V Dimming**

The recommended implementation of the dimming control is provided below.

Downloaded from Arrow.com.

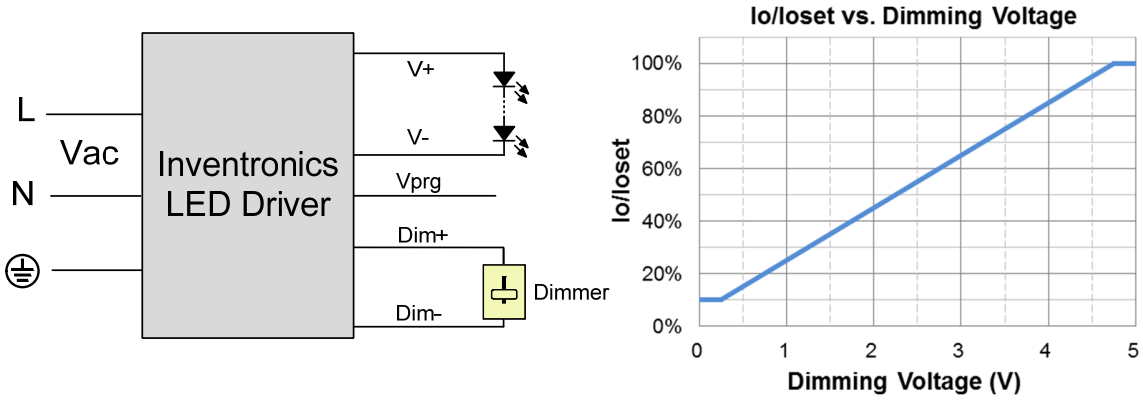

Implementation 1: Positive logic

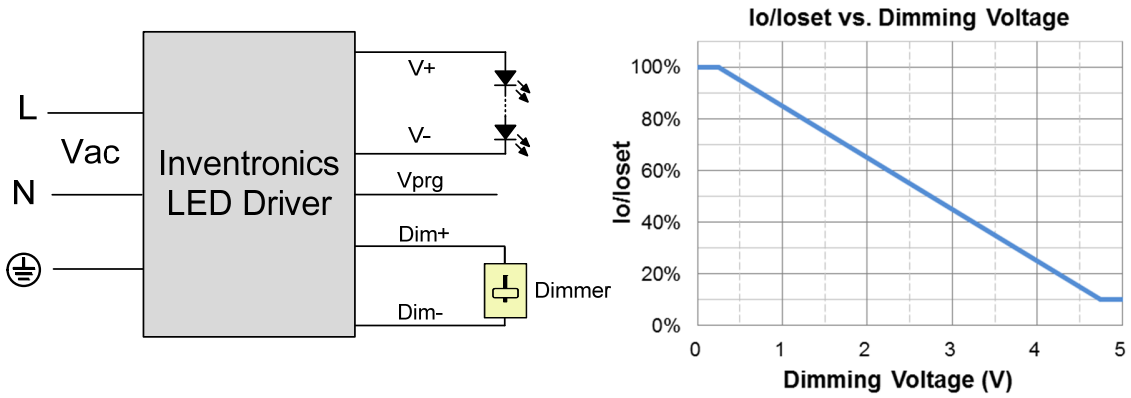

Implementation 2: Negative logic

Notes:

1. Do NOT connect Dim− to the output V− or V+, otherwise the driver will not work properly.
2. The dimmer can also be replaced by an active 1-5V voltage source signal or passive components like zener.
3. When 1-5V negative logic dimming mode and Dim+ is open, the driver will output maximum current.

● 1-10V Dimming

The recommended implementation of the dimming control is provided below.

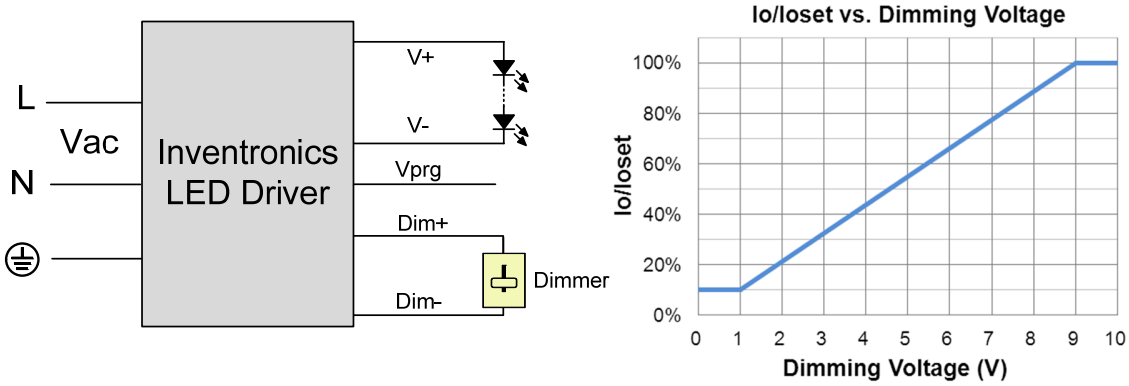

Implementation 3: Positive logic

Downloaded from Arrow.com.

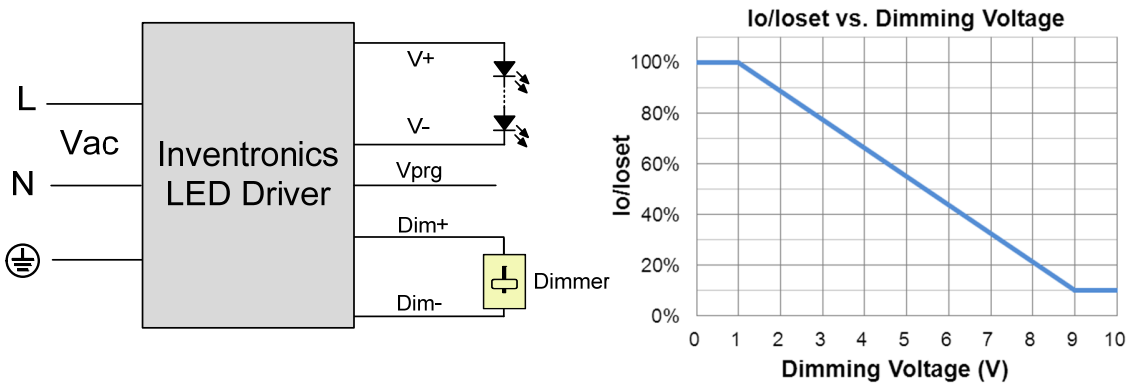

Implementation 4: Negative logic

Notes:

1. Do NOT connect Dim− to the output V− or V+, otherwise the driver will not work properly.
2. The dimmer can also be replaced by an active 1-10V voltage source signal or passive components like zener.
3. When 1-10V negative logic dimming mode and Dim+ is open, the driver will output minimum current.

● 10V PWM Dimming

The recommended implementation of the dimming control is provided below.

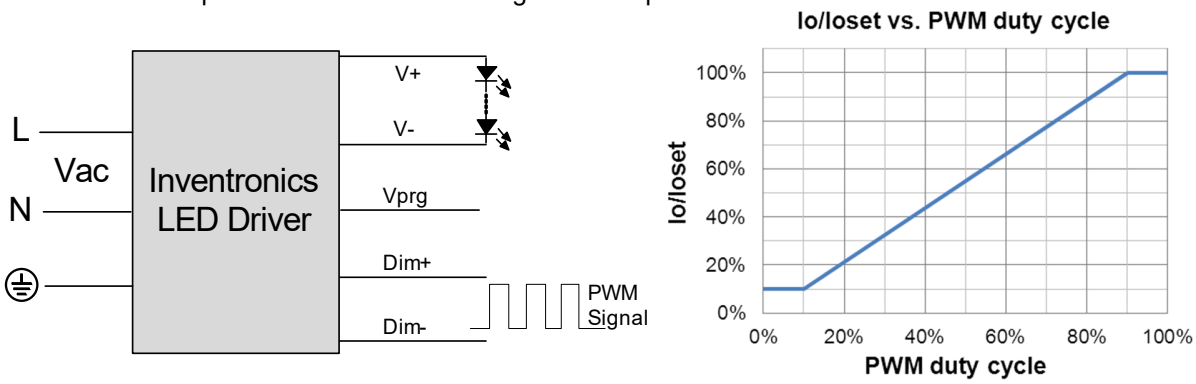

Implementation 5: Positive logic

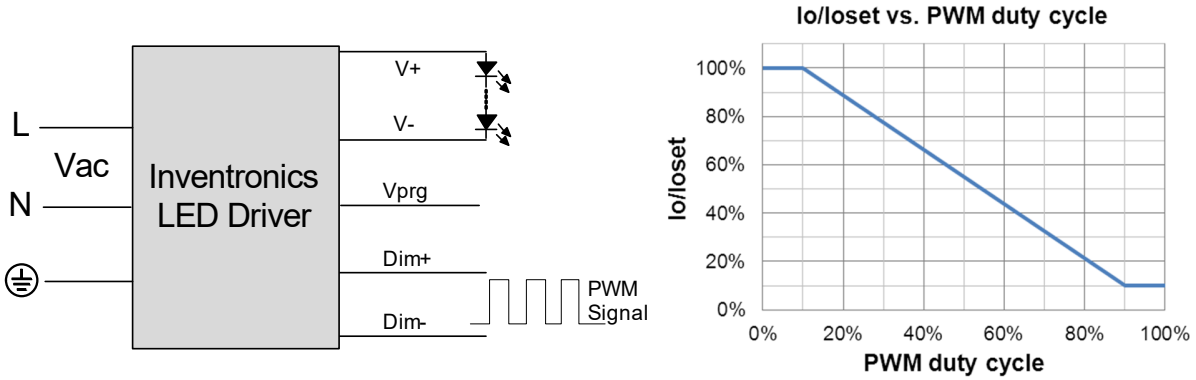

Implementation 6: Negative logic

Notes:

1. Do NOT connect Dim− to the output V− or V+, otherwise the driver will not work properly.
2. When 10V PWM negative logic dimming mode and Dim+ is open, the driver will output minimum current.

Downloaded from Arrow.com.

- **Time Dimming**
  Time dimming control includes 3 kinds of modes, they are Self Adapting-Midnight, Self Adapting-Percentage and Traditional Timer.
  - **Self Adapting-Midnight**: Automatically adjusts the dimming curve based on the on-time of past two days (if difference <15 minutes), assuming that the center point of the dimming curve is midnight local time.
  - **Self Adapting-Percentage**: Automatically adjusts the on-time of each step by a constant percentage = (actual on-time for the past 2 days if difference <15 min) / (programmed on-time from the dimming curve).
  - **Traditional Timer**: Follows the programmed timing curve after power on with no changes.

- **Output Lumen Compensation**
  Output Lumen Compensation (OLC) may be used to maintain constant light output over the life of the LEDs by driving them at a reduced current when new, then gradually increasing the drive current over time to counteract LED lumen degradation.

Programming Connection Diagram

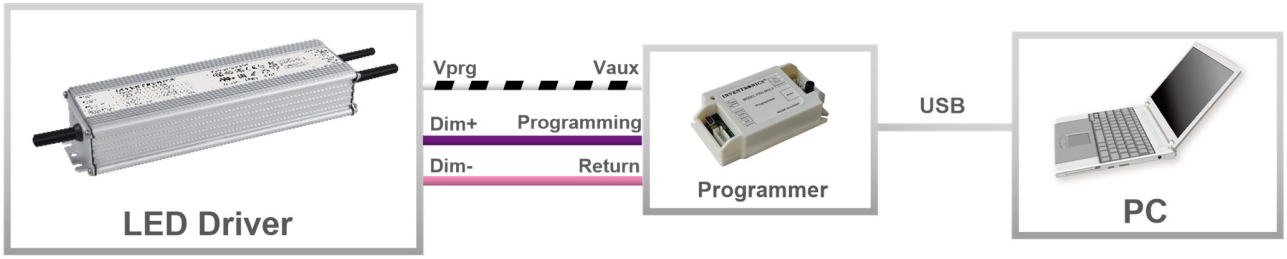

Note: The driver does not need to be powered on during the programming process.

- **Please refer to PRG-MUL2 (Programmer) datasheet for details.**

Mechanical Outline

EUM-240S070DG

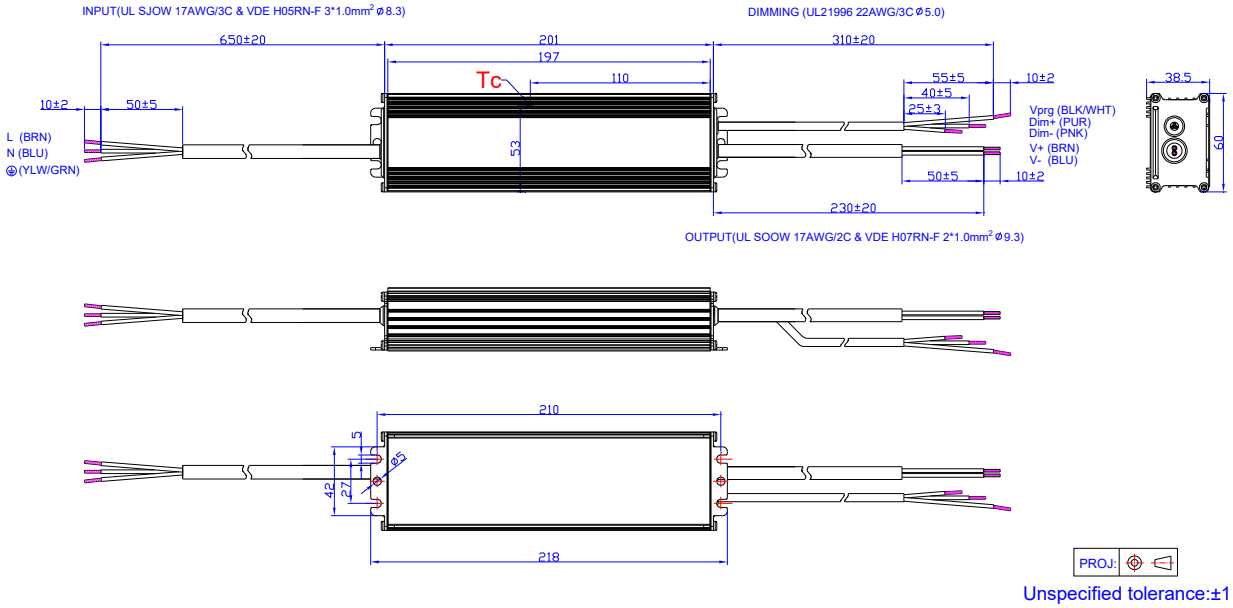

Unspecified tolerance:±1

Downloaded from Arrow.com.

EUM-240S105DG/EUM-240S150DG

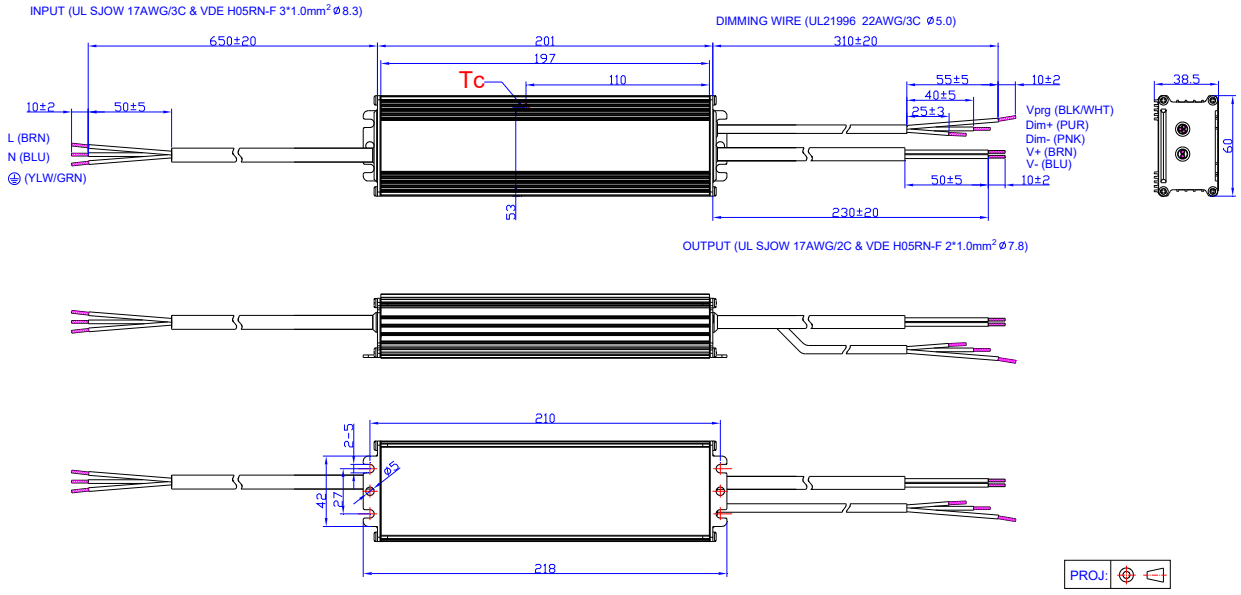

PROJ:

Unspecified tolerance:±1

EUM-240S350DG/EUM-240S670DG

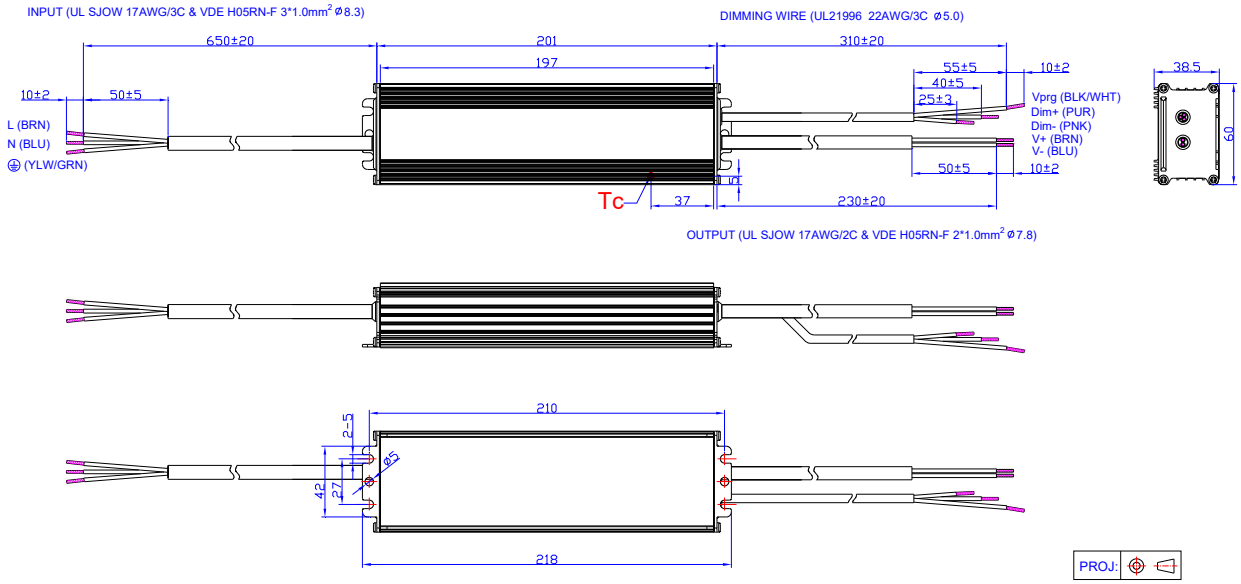

PROJ:

Unspecified tolerance:±1

Downloaded from Arrow.com.

EUM-240S105DT/EUM-240S150DT

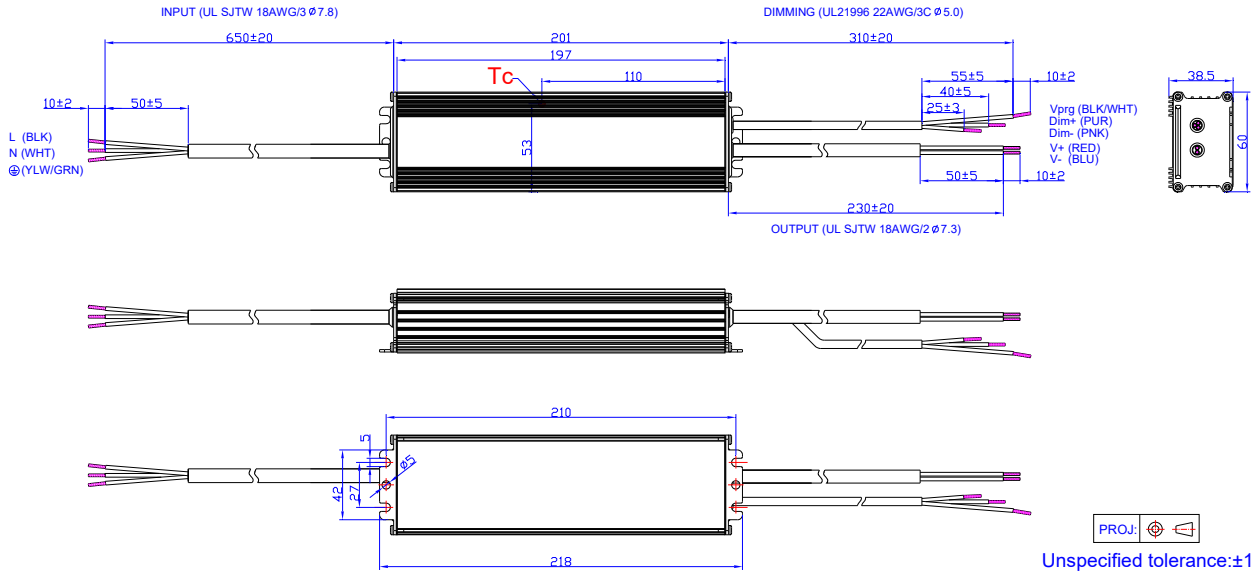

Unspecified tolerance:±1

EUM-240S350DT/EUM-240S670DT

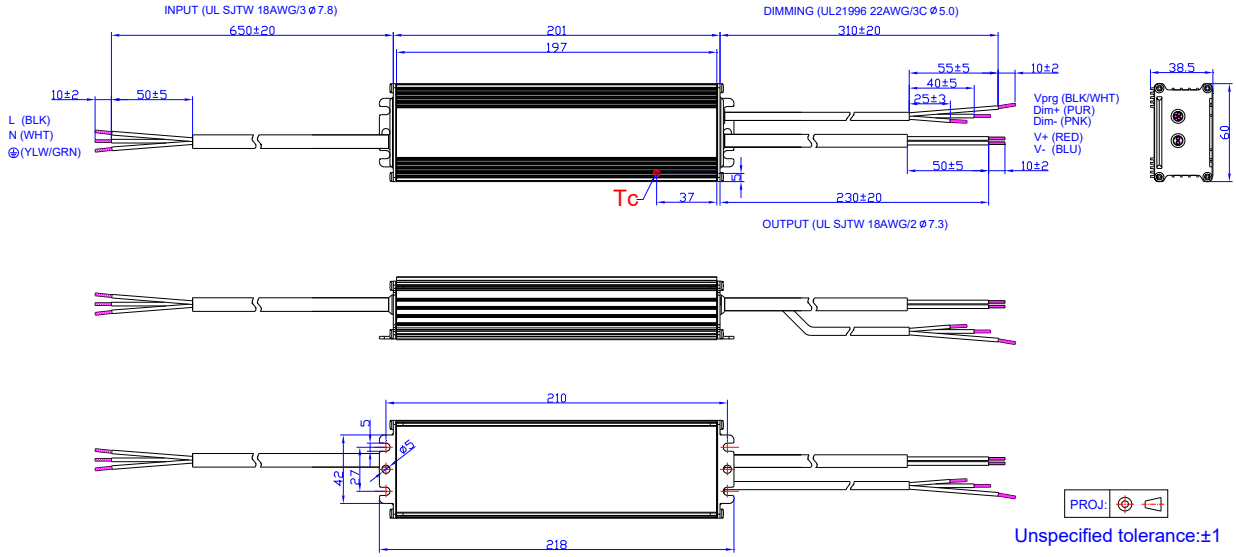

Unspecified tolerance:±1

Downloaded from Arrow.com.

EUM-240S105DB/EUM-240S150DB

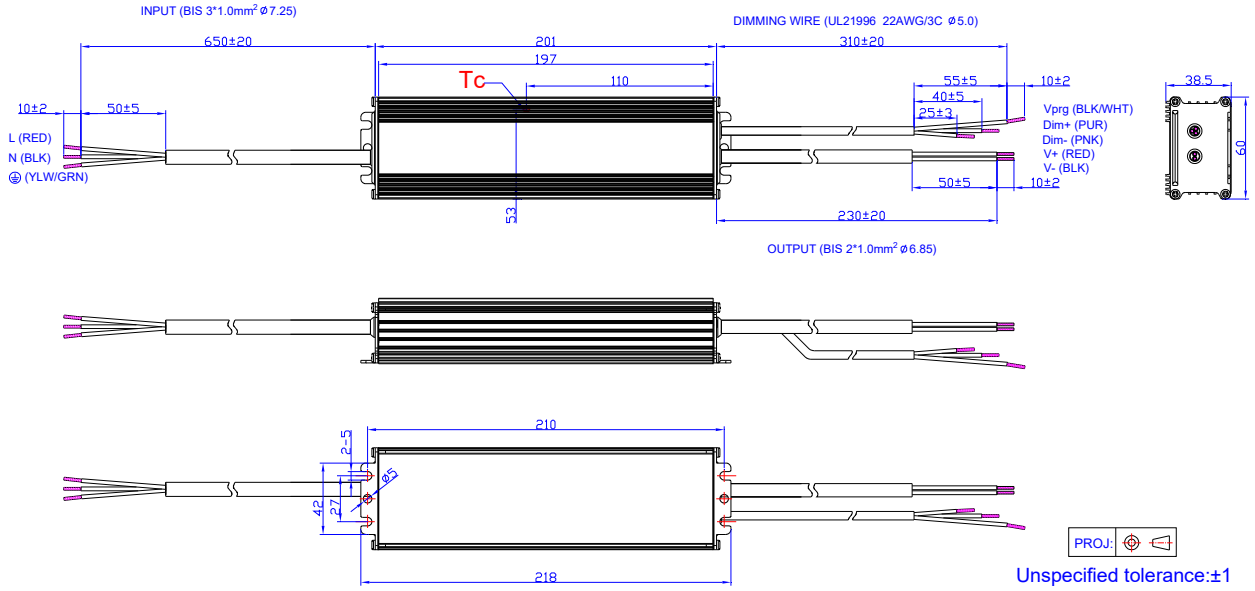

EUM-240S350DB/EUM-240S670DB

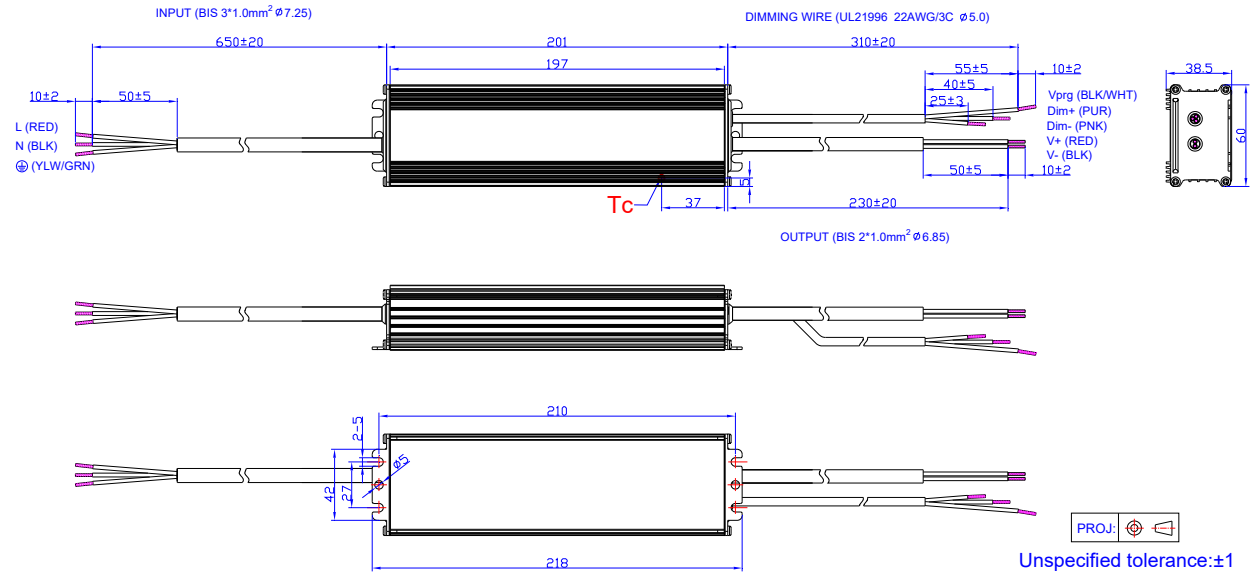

RoHS Compliance

Our products comply with reference to RoHS Directive (EU) 2015/863 amending 2011/65/EU, calling for the elimination of lead and other hazardous substances from electronic products.

Downloaded from Arrow.com.

Revision History

Change Date	Rev.	Description of Change		
		Item	From	To
2021-03-09	A	Datasheets Release	/	/
2021-11-11	B	UKCA logo	/	Added
		Models	EUM-240S070Dx	Added
		Models	Note (7)	Added
		I-V Operation Area	EUM-240S070Dx	Added
		Output Current Setting(Ioset) Range	EUM-240S070Dx	Added
		Output Current Setting Range with Constant Power	EUM-240S070Dx	Added
		No Load Output Voltage	EUM-240S070Dx	Added
		Efficiency at 120 Vac input:	EUM-240S070Dx	Added
		Efficiency at 220 Vac input:	EUM-240S070Dx	Added
		Efficiency at 277 Vac input:	EUM-240S070Dx	Added
		Dimming Output Range	EUM-240S070Dx	Added
		Efficiency vs. Load	EUM-240S070Dx	Added
		Safety &EMC Compliance	UKCA	Added
		Programming Connection Diagram	EUM-240SxxxDT	Updated
		Mechanical Outline	EUM-240SxxxDT	Updated
2023-06-27	C	Product Photograph	/	Updated
		SAA	/	Added
		Safety &EMC Compliance	/	Updated
		Dimming	/	Updated
		Programming Connection Diagram	/	Updated
		Mechanical Outline	/	Updated

Downloaded from Arrow.com.