Downloaded from Arrow.com.

MATERIAL AND FINISH:
Insulator: Polycarbonate, UL-94V-0 rated
Contacts: IEC C13, 70°C: Brass
IEC C15, 120°C: Bronze

ELECTRICAL SPECIFICATIONS:
Current rating: 10 A
Voltage rating: 250 VAC

ORDERING CODE:
43R01-__ 3 __ 1
1 2

1) ELECTRICAL CIRCUIT CONFIGURATION

1 = IEC C13, 10A 250V 70°C
A DIN 49 457

2 = IEC C15, 10A 250V 120°C
D DIN 49 458

2) COLOR
1 = BLACK
2 = GRAY

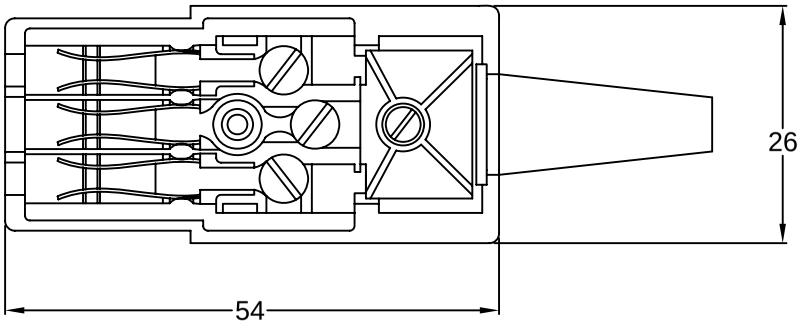

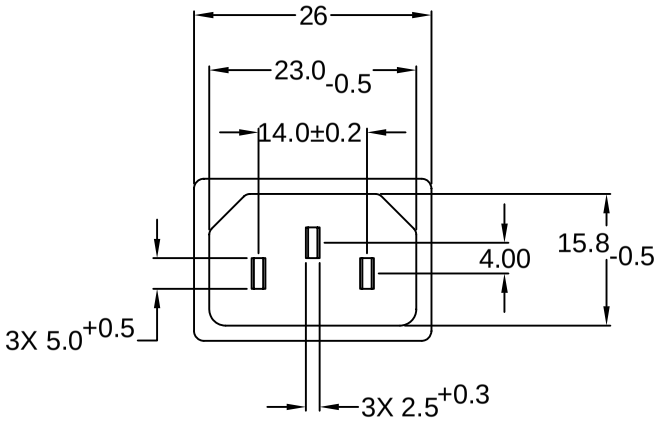

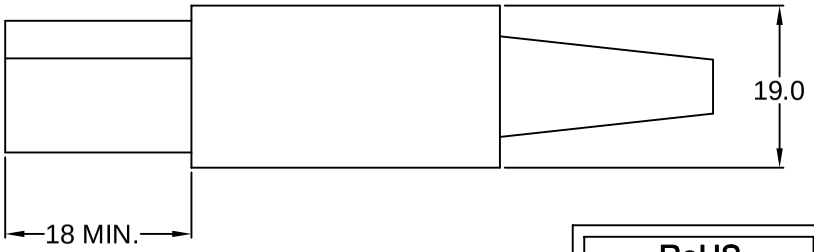

NOTES:
1. Contains integral cable clamp strain relief & internal screw type connections. Maximum wire gauge is 16AWG stranded.
2. Recommended screw torque: 1.2Nm
3. Recommended strip length for jacket and conductors:

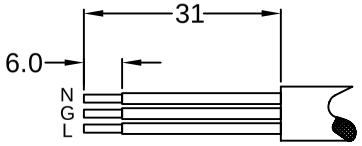

RoHS COMPLIANT

REVISIONS

REV	DATE	CHANGE	CHNG	CHCK	APPR
A	1/25/07	NOTES 2 & 3; RoHS	PB		
B	6/9/10	ADD C15 CONTACT MATERIAL	PB		

TOLERANCE
UNLESS OTHERWISE SPECIFIED
X ± 1
X.X ± 0.4
X.XX ± 0.20

DRAWN BY	GQ	DATE:	08/20/01
CHECK BY	TD	DATE:	08/22/01
APPR BY	PB	DATE:	08/22/01

Power Dynamics, Inc.
Phone: 973 560-0019 Whippany, New Jersey Fax: 973 560-0076

PART: IEC 60320 C13 & C15 FEMALE POWER CORD PLUG; STRAIGHT CONNECTION

PART #: 43R01-X3X1

SHEET 1 of 1

SIZE: A

SCALE: NTS

ALL DIMENSIONS FOR REFERENCE ONLY
DIMENSIONS ARE IN MILLIMETERS

REV: B