© 2022 TE Connectivity. All Rights Reserved.

REVISIONS					
P	LTR	DESCRIPTION	DATE	DWN	APVD
	A	INITIAL REVISION	21FEB2022	KR	RM

SECTION A-A

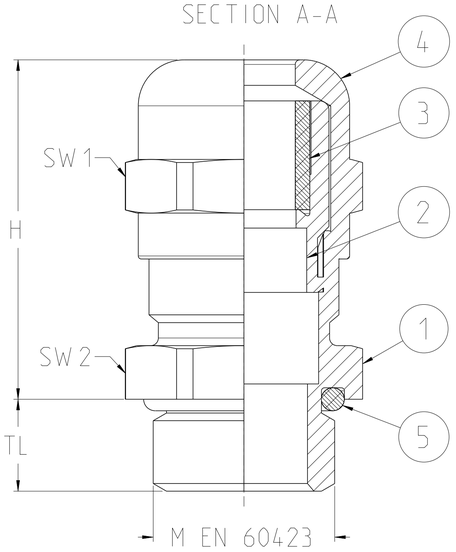

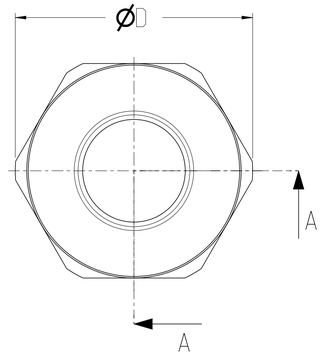

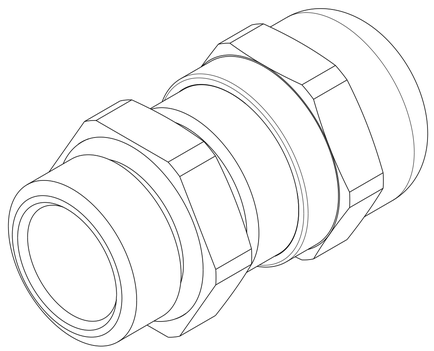

TCPN	TE Product Type (Entrelec)	M EN 60423	TL	H	ØD	SW 1	SW 2	Clamping Range Ø min - max
1SNG602001R0000	EM-SG-M12-MET-A	M12x1.5	6.0	22.2	15.5	14	14	2.0 - 5.0
1SNG602002R0000	EM-SG-M12-MET-B	M12x1.5	12.0	22.2	15.5	14	14	2.0 - 5.0
1SNG602003R0000	EM-SG-M12-MET-C	M12x1.5	6.0	22.2	15.5	14	14	3.0 - 6.5
1SNG602004R0000	EM-SG-M12-MET-D	M12x1.5	12.0	22.2	15.5	14	14	3.0 - 6.5
1SNG602005R0000	EM-SG-M16-MET-A	M16x1.5	7.0	23.3	20.0	17	18	2.0 - 6.0
1SNG602006R0000	EM-SG-M16-MET-B	M16x1.5	12.0	23.3	20.0	17	18	2.0 - 6.0
1SNG602007R0000	EM-SG-M16-MET-C	M16x1.5	7.0	27.9	22.0	20	20	3.0 - 7.0
1SNG602008R0000	EM-SG-M16-MET-D	M16x1.5	12.0	27.9	22.0	20	20	3.0 - 7.0
1SNG602009R0000	EM-SG-M16-MET-E	M16x1.5	7.0	23.3	20.0	17	18	4.0 - 8.0
1SNG602010R0000	EM-SG-M16-MET-F	M16x1.5	12.0	23.3	20.0	17	18	4.0 - 8.0
1SNG602011R0000	EM-SG-M16-MET-G	M16x1.5	6.5	29.4	22.0	20	20	5.0 - 10.0
1SNG602012R0000	EM-SG-M16-MET-H	M16x1.5	7.0	27.9	22.0	20	20	5.0 - 10.0
1SNG602013R0000	EM-SG-M16-MET-I	M16x1.5	12.0	29.4	22.0	20	20	5.0 - 10.0
1SNG602014R0000	EM-SG-M20-MET-A	M20x1.5	8.0	26.0	24.5	22	22	5.0 - 9.0
1SNG602015R0000	EM-SG-M20-MET-B	M20x1.5	12.0	26.0	24.5	22	22	5.0 - 9.0
1SNG602016R0000	EM-SG-M20-MET-C	M20x1.5	8.0	24.5	24.5	22	22	6.0 - 12.0
1SNG602017R0000	EM-SG-M20-MET-D	M20x1.5	12.0	24.4	24.5	22	22	6.0 - 12.0
1SNG602018R0000	EM-SG-M20-MET-E	M20x1.5	8.0	28.5	26.5	24	24	7.0 - 13.0
1SNG602019R0000	EM-SG-M20-MET-F	M20x1.5	8.0	28.0	26.5	24	24	10.0 - 14.0
1SNG602020R0000	EM-SG-M20-MET-G	M20x1.5	12.0	28.0	26.5	24	24	10.0 - 14.0
1SNG602021R0000	EM-SG-M25-MET-A	M25x1.5	8.0	28.0	30.0	24	27	7.0 - 12.0
1SNG602022R0000	EM-SG-M25-MET-B	M25x1.5	12.0	28.0	30.0	24	27	7.0 - 12.0
1SNG602023R0000	EM-SG-M25-MET-C	M25x1.5	8.0	32.8	33.0	30	30	9.0 - 16.0
1SNG602024R0000	EM-SG-M25-MET-D	M25x1.5	12.0	32.8	33.0	30	30	9.0 - 16.0
1SNG602025R0000	EM-SG-M25-MET-E	M25x1.5	8.0	28.0	30.0	24	27	10.0 - 14.0
1SNG602026R0000	EM-SG-M25-MET-F	M25x1.5	12.0	28.0	30.0	24	27	10.0 - 14.0
1SNG602027R0000	EM-SG-M25-MET-G	M25x1.5	8.0	30.6	30.0	27	27	11.0 - 17.0
1SNG602028R0000	EM-SG-M25-MET-H	M25x1.5	12.0	30.6	30.0	27	27	11.0 - 17.0
1SNG602029R0000	EM-SG-M25-MET-I	M25x1.5	8.0	32.8	33.0	30	30	13.0 - 18.0
1SNG602030R0000	EM-SG-M25-MET-J	M25x1.5	12.0	32.8	33.0	30	30	13.0 - 18.0

RPT	QTY	DOC TITLE	DRAWING NUMBER	MATERIAL	COMMENTS
5	1	O-RING	-	NBR	-
4	1	METAL GLAND CAP	-	Brass (Nickel plated)	-
3	1	SEAL	-	CR	-
2	1	PLASTIC INSERT	-	PA6 V2	-
1	1	METAL GLAND BODY	-	Brass (Nickel plated)	-

THIS DRAWING IS A CONTROLLED DOCUMENT.

DWN Rajan n, Kasi 21FEB2022
CHK Rafeeq, Mohd 21FEB2022
APVD Rafeeq, Mohd 21FEB2022
PRODUCT SPEC M-STD-GLAND-BRASS
APPLICATION SPEC -
WEIGHT -

DIMENSIONS: mm
TOLERANCES UNLESS OTHERWISE SPECIFIED:
0 PLC ±
1 PLC ±1
2 PLC ±1
3 PLC ±1
4 PLC ±1
ANGLES ±
MATERIAL REF. TABLE -
FINISH REF. TABLE -

TE Connectivity

NAME - M-STD-GLAND-BRASS -

SIZE	CAGE CODE	DRAWING NO	RESTRICTED TO
A1	00779	C-1SNP061344-0100	-

CUSTOMER DRAWING | SCALE 5:1 | SHEET 1 OF 2 | REV A

4805 (3/13)

Downloaded from Arrow.com.

© 2022 TE Connectivity. All Rights Reserved.

REVISIONS					
P	LTR	DESCRIPTION	DATE	DWN	APVD
	A	INITIAL REVISION	21FEB2022	KR	RM

TCPN	TE Product Type (Entrelec)	M EN 60423	TL	H	ØD	SW1	SW2	Clamping Range Ø min - max
1SNG602031R0000	EM-SG-M32-MET-A	M32x1.5	9.0	32.8	37.5	30	34	9.0 - 16.0
1SNG602032R0000	EM-SG-M32-MET-B	M32x1.5	15.0	32.8	37.5	30	34	9.0 - 16.0
1SNG602033R0000	EM-SG-M32-MET-C	M32x1.5	9.0	44.1	44.5	40	40	12.0 - 20.0
1SNG602034R0000	EM-SG-M32-MET-D	M32x1.5	15.0	44.1	44.5	40	40	12.0 - 20.0
1SNG602035R0000	EM-SG-M32-MET-E	M32x1.5	9.0	32.8	37.5	30	34	13.0 - 18.0
1SNG602036R0000	EM-SG-M32-MET-F	M32x1.5	15.0	32.8	37.5	30	34	13.0 - 18.0
1SNG602037R0000	EM-SG-M32-MET-G	M32x1.5	8.0	36.2	37.5	34	34	15.0 - 21.0
1SNG602038R0000	EM-SG-M32-MET-H	M32x1.5	15.0	36.2	37.5	34	34	15.0 - 21.0
1SNG602039R0000	EM-SG-M32-MET-I	M32x1.5	9.0	44.2	44.5	40	40	18.0 - 25.0
1SNG602040R0000	EM-SG-M32-MET-J	M32x1.5	15.0	44.2	44.5	40	40	18.0 - 25.0
1SNG602041R0000	EM-SG-M40-MET-A	M40x1.5	9.0	38.6	48.5	40	43	12.0 - 20.0
1SNG602042R0000	EM-SG-M40-MET-B	M40x1.5	15.0	38.6	48.5	40	43	12.0 - 20.0
1SNG602043R0000	EM-SG-M40-MET-C	M40x1.5	9.0	38.6	48.5	40	43	18.0 - 25.0
1SNG602044R0000	EM-SG-M40-MET-D	M40x1.5	15.0	38.6	48.5	40	43	18.0 - 25.0
1SNG602045R0000	EM-SG-M40-MET-E	M40x1.5	9.0	43.3	48.5	43	43	16.0 - 23.0
1SNG602046R0000	EM-SG-M40-MET-F	M40x1.5	15.0	43.3	48.5	43	43	16.0 - 23.0
1SNG602047R0000	EM-SG-M40-MET-G	M40x1.5	9.0	43.3	48.5	43	43	19.0 - 28.0
1SNG602048R0000	EM-SG-M40-MET-H	M40x1.5	15.0	43.3	48.5	43	43	19.0 - 28.0
1SNG602049R0000	EM-SG-M40-MET-I	M40x1.5	9.0	52.5	55.5	50	50	22.0 - 32.0
1SNG602050R0000	EM-SG-M40-MET-J	M40x1.5	15.0	52.5	55.5	50	50	22.0 - 32.0
1SNG602051R0000	EM-SG-M50-MET-A	M50x1.5	9.0	47.8	61.0	50	55	20.0 - 26.0
1SNG602052R0000	EM-SG-M50-MET-B	M50x1.5	15.0	47.8	61.0	50	55	20.0 - 26.0
1SNG602053R0000	EM-SG-M50-MET-C	M50x1.5	9.0	47.8	61.0	50	55	22.0 - 32.0
1SNG602054R0000	EM-SG-M50-MET-D	M50x1.5	15.0	47.8	61.0	50	55	22.0 - 32.0
1SNG602055R0000	EM-SG-M50-MET-E	M50x1.5	9.0	51.9	64.0	58	58	27.0 - 38.0
1SNG602056R0000	EM-SG-M50-MET-F	M50x1.5	15.0	51.9	64.0	58	58	27.0 - 38.0
1SNG602057R0000	EM-SG-M50-MET-G	M50x1.5	9.0	52.8	70.0	64	64	34.0 - 44.0
1SNG602058R0000	EM-SG-M50-MET-H	M50x1.5	15.0	52.8	70.0	64	64	34.0 - 44.0
1SNG602059R0000	EM-SG-M63-MET-A	M63x1.5	10.0	53.8	75.0	64	68	29.0 - 35.0
1SNG602060R0000	EM-SG-M63-MET-B	M63x1.5	14.0	52.8	75.0	64	68	29.0 - 35.0
1SNG602061R0000	EM-SG-M63-MET-C	M63x1.5	18.0	52.8	75.0	64	68	29.0 - 35.0
1SNG602062R0000	EM-SG-M63-MET-D	M63x1.5	10.0	53.8	75.0	64	68	34.0 - 44.0
1SNG602063R0000	EM-SG-M63-MET-E	M63x1.5	15.0	53.8	75.0	64	68	34.0 - 44.0
1SNG602064R0000	EM-SG-M63-MET-F	M63x1.5	14.0	52.8	75.0	64	68	34.0 - 44.0
1SNG602065R0000	EM-SG-M63-MET-G	M63x1.5	18.0	52.8	75.0	64	68	34.0 - 44.0
1SNG602066R0000	EM-SG-M63-MET-H	M63x1.5	10.0	50.7	83.0	75	75	37.0 - 53.0
1SNG602067R0000	EM-SG-M63-MET-I	M63x1.5	18.0	51.1	83.0	75	75	37.0 - 53.0

RPT	QTY	DOC TITLE	DRAWING NUMBER	MATERIAL	COMMENTS
5	1	O-RING	-	NBR	-
4	1	METAL GLAND CAP	-	Brass (Nickel plated)	-
3	1	SEAL	-	CR	-
2	1	PLASTIC INSERT	-	PA6 V2	-
1	1	METAL GLAND BODY	-	Brass (Nickel plated)	-

THIS DRAWING IS A CONTROLLED DOCUMENT.

DIMENSIONS: mm

TOLERANCES UNLESS OTHERWISE SPECIFIED:
0 PLC ±-
1 PLC ±1
2 PLC ±1
3 PLC ±1
4 PLC ±1
ANGLES ±-

MATERIAL: REF. TABLE -

FINISH: REF. TABLE -

DWN Rajan n, Kasi 21FEB2022
CHK Rafeeq, Mohd 21FEB2022
APVD Rafeeq, Mohd 21FEB2022
PRODUCT SPEC M-STD-GLAND-BRASS
APPLICATION SPEC -
WEIGHT -

TE Connectivity

NAME - M-STD-GLAND-BRASS -

SIZE	CAGE CODE	DRAWING NO	RESTRICTED TO
A1	00779	C-1SNP061344-0100	-

CUSTOMER DRAWING | SCALE 5:1 | SHEET 2 OF 2 | REV A

Downloaded from Arrow.com.