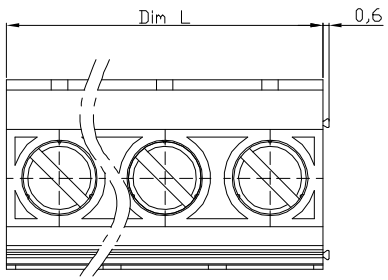

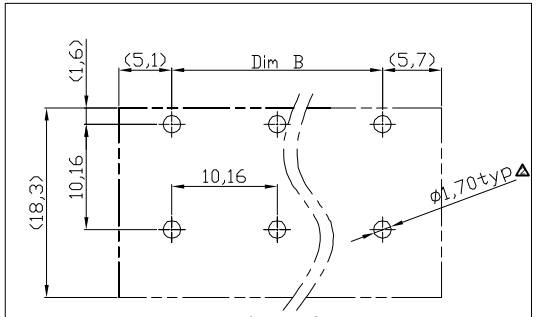

PCB LAYOUT
Top View

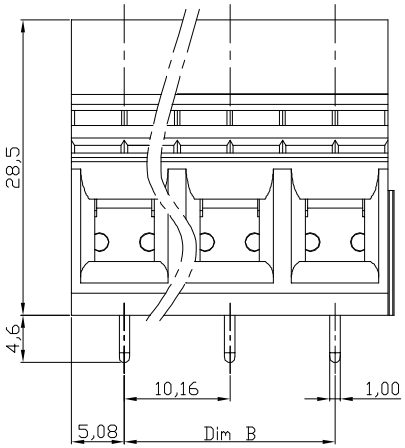

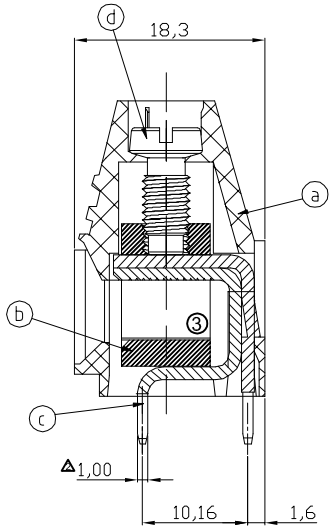

NOTES:

MATERIAL

1.Item ⓐ Terminal (housing):Thermoplastic (UL 94V-0)
Grey (RAL7035/D)
2.Item ⓑ Clamp: Brass, Ni plated
③ 3.Item ⓒ Wire guard solder pin: Copper, Tin plated
4.Item ⓓ Terminal screw: Steel Zinc plating"-"slot type

ELECTRICAL cULus IEC

1.Voltage rating: 300V 650V
③ 2.Current rating: 65A 57A
③ 3.Solid wire(AWG): 6-20 0.5-16mm²
③ 5.Stranded wire(AWG): 6-20 0.5-10mm²
6.Torque(Lb-In): 19 1.2N.m
7.Screw: M4.5
8.Wire strip length:10-11mm
9.Withstanding voltage: 1.6KV 8KV
10.Operating temperature: -40°C to +115°C
③11.Soldering temperature: 260°C ±5°C/5 Sec △
12.Safety approval: c us

Poles	02	03	04	05	06	07	08	09	10	11	12
Dim L	20.32	30.48	40.64	50.80	60.96	71.12	81.28	91.44	101.60	111.76	121.92
Dim B	10.16	20.32	30.48	40.64	50.80	60.96	71.12	81.28	91.44	101.60	111.76
TOL	±0.15			±0.25				±0.35			

RoHS compliant
Unit: mm

④ UL File No.: E349947

Scale	Free
TOLERANCE	
X.	±0.50
X.X	±0.30
X.XX	±0.10
DIM	TOL
X.°	±1°
Angle	TOL

Id.	Modification	Date	Name
④	Add UL	15.03.2016	Amy
③	Change the design	19.02.2014	Amy
②	Change dimension from 1,90 to 1,70 △ Change dimension 1,20 to 1,00 △ Modify Operating temperature △	19.03.2009	Dean
①	Drawn	20.03.2007	Hellwig

	Date	Name
Drawn	20.03.2007	Hellwig
Approved	15.03.2016	Amy

ASSMANN WSW components

Customer-No.

ASSMANN WSW-No.
A-TB116-VPxx

Drawing-No.
ASS 2179 CO

rev04

Replace

Sheet

SV1387

Downloaded from Arrow.com.