© 2024 TE Connectivity. All Rights Reserved.

REVISIONS					
P	LTR	DESCRIPTION	DATE	DWN	APVD
	A	TE STANDARD	18JUL2024	KS	RB

NOTE
Bemerkungen:

1 TE-CONNECTIVITY ORDER-NUMBER
TE-connectivity Bestellnummer

EC No. 22779

Emergency Switch

Page 1 of 2

Mounting dimensions

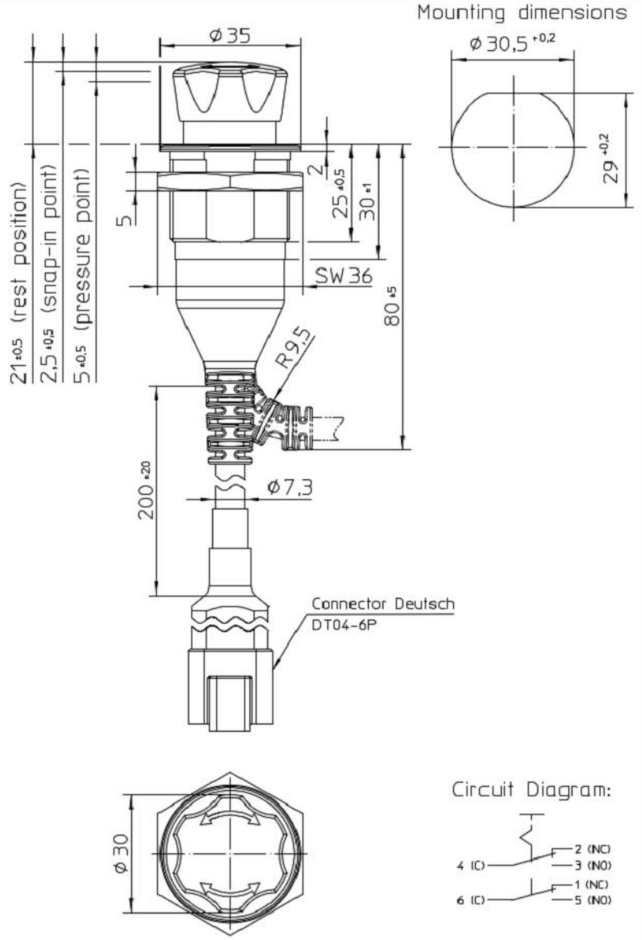

Circuit Diagram:

	Date	Name	mm	Scale
Create	10.12.2018	Nonne		1:1
Edited	12.08.2019	Baumg	General Tolerances DIN ISO 2768 cL	
Check	13.08.2019	Nonne		

Drawing No: ES-2200-T311-020C
NSN:

For this drawing we reserve the copyright in accordance with DIN ISO 16016

EC No. 22779

Emergency Switch

Page 2 of 2

Technical Data

Construction

Material socket	PA GF RAL 1003; UL 94 V0
Material button	PA GK RAL 3000; UL 94 HB
Protection interior	IP67 IEC 60529
	IP6K9K IEC 60529
connector (in mated condition)	IP67/ IP6K9K IEC 60529
Shock resistance	ISO 16750-3, 50g/ 6ms half sinus
Vibration resistance	ISO 16750-3, Test VII
Climatic resistance	IEC 60068-2-38
Chemical resistance	ISO 16750-5, Code Z
Temperature range	-40°C to +85°C
Torque M30x1,5 max.	6 Nm
Weight	approx. 95g

Mechanical Data

Locking (turn to reset)	EN 60947-5-5
Positive opening operation NO	EN 60947-5-1
Operating force max.	20-50 N
Torque knob max.	3 Nm
Current carrying party	Cu-Alloy
Contact material	Ag-Alloy
Mechanical life	40 000 cycles

Electrical Data

Voltage range	9VDC to 32VDC
Nominal voltage	12VDC / 24VDC
Dielectric withstanding voltage	1050 VAC for 1 min.
contact resistance	max. 50 mOhm
Insulation resistance	> 100 MOhm at 500 VDC
Continuous current	10mA to 8A
Current max.	10,1 A
Switching capacity min.	12 VDC, 10mA
Electrical life	
at 8 A / 28 VDC ohmic load	10 000 cycles
at 5 A / 28 VDC ohmic load	40 000 cycles
at 2 A / 28 VDC ohmic load	40 000 cycles
Short circuit protection	Automotive fast-acting fuse 10A

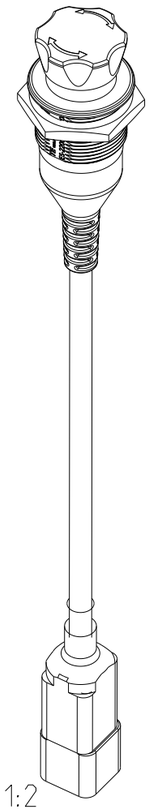

ISO 1:2

	Date	Name	mm	Scale
Create	10.12.2018	Nonne		1:1
Edited	12.08.2019	Baumg	General Tolerances DIN ISO 2768 cL	
Check	13.08.2019	Nonne		

Drawing No: ES-2200-T311-020C
NSN:

For this drawing we reserve the copyright in accordance with DIN ISO 16016

1 K1163870	A	EMERGENCY SWITCH Not-Halt Schalter	1
TE ORDER-NO.	REV.	DESCRIPTION	ITEM NO

THIS DRAWING IS A CONTROLLED DOCUMENT.

DIMENSIONS: mm	TOLERANCES UNLESS OTHERWISE SPECIFIED: DIN ISO 2768 cL
	0 PLC ±
	1 PLC ±
	2 PLC ±
	3 PLC ±
	4 PLC ±
	ANGLES ±
MATERIAL	FINISH

DWN	10DEC2018 Y.Nonnenmacher
CHK	12AUG2019 R.Baumgartner
APVD	13AUG2019 Y.Nonnenmacher
PRODUCT SPEC	
APPLICATION SPEC	
WEIGHT	

TE Connectivity

NAME: EMERGENCY SWITCH
Not-Halt Schalter

SIZE	CAGE CODE	DRAWING NO	RESTRICTED TO
A3	00779	C-ES-2200-T311-020C	-

CUSTOMER DRAWING	SCALE	SHEET 1 OF 1	REV A

1470-19 (3/13)

Downloaded from Arrow.com.