CY7C66013C/CY7C66113C

Full-Speed USB (12 Mbps) Peripheral Controller with Integrated Hub

Features

- Full speed USB peripheral microcontroller with an integrated USB hub
  - Well suited for USB compound devices such as a keyboard hub function
- 8-bit USB optimized microcontroller
  - Harvard architecture
  - 6 MHz external clock source
  - 12 MHz internal CPU clock
  - 48 MHz internal Hub clock
- Internal memory
  - 256 bytes of RAM
  - 8 kB of PROM
- Integrated Master and Slave I^2C compatible controller (100 kHz) enabled through General Purpose I/O (GPIO) pins
- Hardware Assisted Parallel Interface (HAPI) for data transfer to external devices
- I/O ports
  - Three GPIO ports (Port 0 to 2) capable of sinking 8 mA per pin (typical)
  - An additional GPIO port (Port 3) capable of sinking 12 mA per pin (typical) for high current requirements: LEDs
  - Higher current drive achievable by connecting multiple GPIO pins together to drive a common output
  - Each GPIO port is configured as inputs with internal pull ups or open drain outputs or traditional CMOS outputs
  - A Digital to Analog Conversion (DAC) port with programmable current sink outputs is available on the CY7C66113C device
  - Maskable interrupts on all I/O pins
- 12-bit free running timer with one microsecond clock ticks
- Watchdog Timer (WDT)
- Internal Power on Reset (POR)
- USB Specification compliance
  - Conforms to USB Specification, Version 1.1
  - Conforms to USB HID Specification, Version 1.1
  - Supports one or two device addresses with up to five user configured endpoints
    - Up to two 8-byte control endpoints
    - Up to four 8-byte data endpoints
    - Up to two 32-byte data endpoints
  - Integrated USB transceivers
  - Supports four downstream USB ports
  - GPIO pins provide individual power control outputs for each downstream USB port
  - GPIO pins provide individual port over current inputs for each downstream USB port
- Improved output drivers to reduce electromagnetic interference (EMI)
- Operating voltage from 4.0 V–5.5 V DC
- Operating temperature from 0 °C–70 °C
- CY7C66013C available in 48-pin SSOP (-PVXC) packages
- CY7C66113C available in 56-pin QFN or 56-pin SSOP (-PVXC) packages
- Industry standard programmer support

Functional Overview

The CY7C66013C and CY7C66113C are compound devices with a full speed USB microcontroller in combination with a USB hub. Each device is suited for combination peripheral functions with hubs such as a keyboard hub function. The 8-bit one time programmable microcontroller with a 12 Mbps USB Hub supports as many as four downstream ports.

GPIO

The CY7C66013C features 29 GPIO pins to support USB and other applications. The I/O pins are grouped into four ports (P0[7:0], P1[7:0], P2[7:0], P3[4:0]) where each port is configured as inputs with internal pull ups, open drain outputs, or traditional CMOS outputs. Ports 0 to 2 are rated at 8 mA per pin (typical) sink current. Port 3 pins are rated at 12 mA per pin (typical) sink current, which allows these pins to drive LEDs. Multiple GPIO pins are connected together to drive a single output for more drive current capacity. Additionally, each I/O pin is used to generate a GPIO interrupt to the microcontroller. All of the GPIO interrupts all share the same “GPIO” interrupt vector.

The CY7C66113C has 31 GPIO pins (P0[7:0], P1[7:0], P2[7:0], P3[6:0]).

DAC

The CY7C66113C has an additional port P4[7:0] that features an additional eight programmable sink current I/O pins (DAC). Every DAC pin includes an integrated 14 kΩ pull up resistor. When a ‘1’ is written to a DAC I/O pin, the output current sink is disabled and the output pin is driven HIGH by the internal pull up resistor. When a ‘0’ is written to a DAC I/O pin, the internal pull up is disabled and the output pin provides the programmed amount of sink current. A DAC I/O pin is used as an input with an internal pull up by writing a ‘1’ to the pin.

The sink current for each DAC I/O pin is individually programmed to one of sixteen values using dedicated Isink registers. DAC bits DAC[1:0] is used as high current outputs with a programmable sink current range of 3.2 to 16 mA (typical). DAC bits DAC[7:2] have a programmable current sink range of 0.2 to 1.0 mA (typical). Multiple DAC pins are connected together to drive a single output that requires more sink current capacity. Each I/O pin is used to generate a DAC interrupt to the microcontroller. Also, the interrupt polarity for each DAC I/O pin is individually programmable.

Downloaded from Arrow.com.

Clock

The microcontroller uses an external 6 MHz crystal and an internal oscillator to provide a reference to an internal PLL based clock generator. This technology allows the customer application to use an inexpensive 6 MHz fundamental crystal that reduces the clock related noise emissions (EMI). A PLL clock generator provides the 6, 12, and 48 MHz clock signals for distribution within the microcontroller.

Memory

The CY7C66013C and CY7C66113C have 8 kB of PROM.

Power on Reset, Watchdog, and Free Running Timer

These parts include POR logic, a WDT, and a 12-bit free-running timer. The POR logic detects when power is applied to the device, resets the logic to a known state, and begins executing instructions at PROM address 0x0000. The WDT is used to ensure that the microcontroller recovers after a period of inactivity. The firmware may become inactive for a variety of reasons, including errors in the code or a hardware failure such as waiting for an interrupt that never occurs.

I^2C and HAPI Interface

The microcontroller communicates with external electronics through the GPIO pins. An I^2C compatible interface accommodates a 100 kHz serial link with an external device. There is also a HAPI to transfer data to an external device.

Timer

The free-running 12-bit timer clocked at 1 MHz provides two interrupt sources, 128 µs and 1.024 ms. The timer is used to measure the duration of an event under firmware control by reading the timer at the start of the event and after the event is complete. The difference between the two readings indicates the duration of the event in microseconds. The upper four bits of the timer are latched into an internal register when the firmware reads the lower eight bits. A read from the upper four bits actually reads data from the internal register, instead of the timer. This feature eliminates the need for firmware to try to compensate if the upper four bits increment immediately after the lower eight bits are read.

Interrupts

The microcontroller supports eleven maskable interrupts in the vectored interrupt controller. Interrupt sources include the 128 µs (bit 6) and 1.024 ms (bit 9) outputs from the free-running timer, five USB endpoints, the USB hub, the DAC port, the GPIO ports, and the I^2C compatible master mode interface. The timer bits cause an interrupt (if enabled) when the bit toggles from LOW ‘0’ to HIGH ‘1.’ The USB endpoints interrupt after the USB host has written data to the endpoint FIFO or after the USB controller sends a packet to the USB host. The DAC ports have an additional level of masking that allows the user to select which DAC inputs causes a DAC interrupt. The GPIO ports also have a level of masking to select which GPIO inputs causes a GPIO interrupt. For additional flexibility, the input transition polarity that causes an interrupt is programmable for each pin of the DAC port. Input transition polarity is programmed for each GPIO port as part of the port configuration. The interrupt polarity can be rising edge (‘0’ to ‘1’) or falling edge (‘1’ to ‘0’).

USB

The CY7C66013C and CY7C66113C include an integrated USB Serial Interface Engine (SIE) that supports the integrated peripherals and the hub controller function. The hardware supports up to two USB device addresses with one device address for the hub (two endpoints) and a device address for a compound device (three endpoints). The SIE allows the USB host to communicate with the hub and functions integrated into the microcontroller. The part includes a 1:4 hub repeater with one upstream port and four downstream ports. The USB Hub allows power management control of the downstream ports by using GPIO pins assigned by the user firmware. The user has the option of ganging the downstream ports together with a single pair of power management pins, or providing power management for each port with four pairs of power management pins.

Downloaded from Arrow.com.

Logic Block Diagram

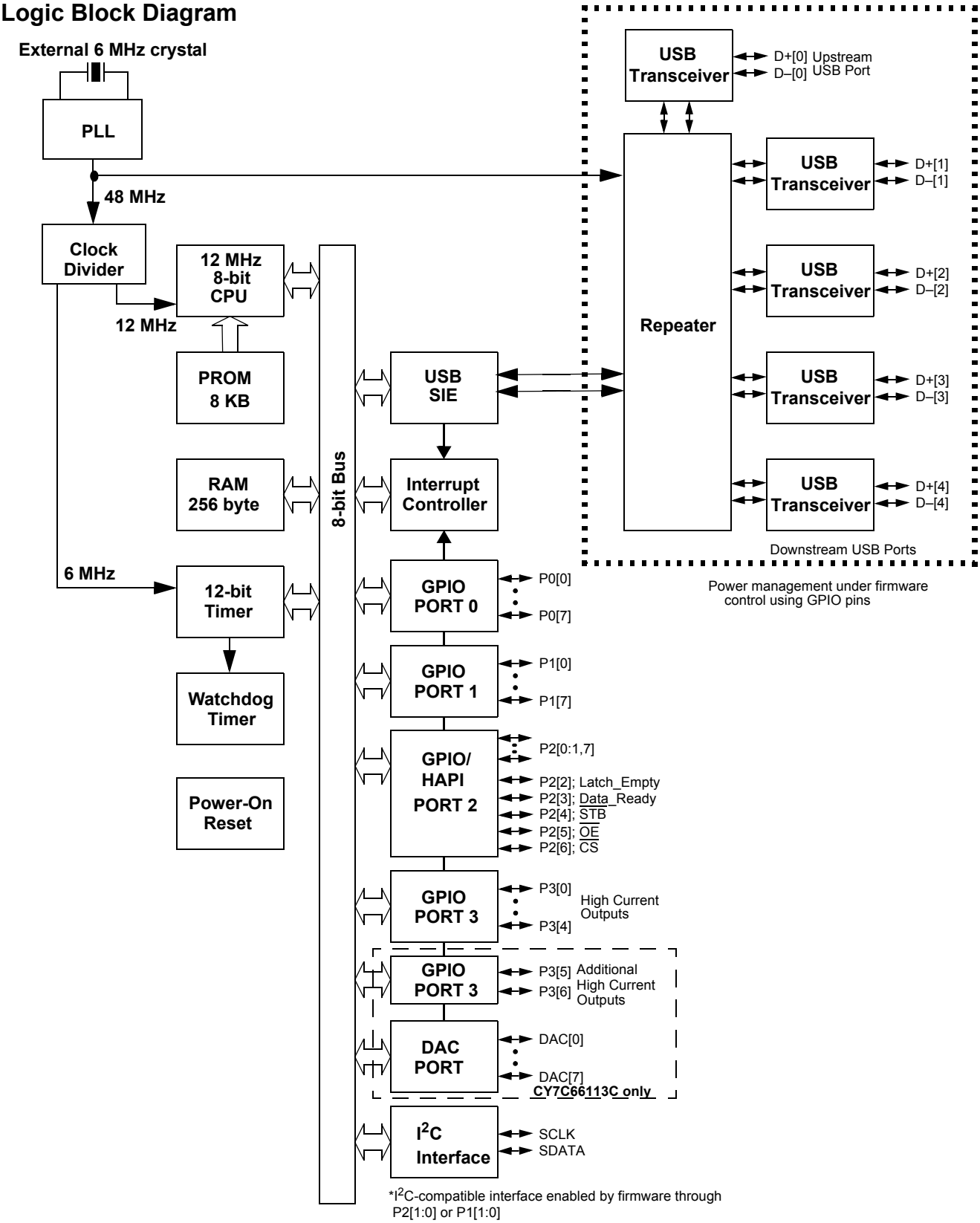

Downloaded from Arrow.com.

Contents

Pin Configurations **5**
Product Summary Tables **9**
Pin Assignments 9
I/O Register Summary 9
Instruction Set Summary 11
Programming Model **12**
14-bit Program Counter (PC) 12
8-bit Accumulator (A) 13
8-bit Temporary Register (X) 13
8-bit Program Stack Pointer (PSP) 13
8-bit Data Stack Pointer (DSP) 13
Address Modes 14
Clocking **14**
Reset **15**
Power on Reset 15
Watchdog Reset 15
Suspend Mode **16**
General Purpose I/O (GPIO) Ports **16**
GPIO Configuration Port 18
GPIO Interrupt Enable Ports 19
DAC Port **20**
DAC Isink Registers 21
DAC Port Interrupts 21
12-bit Free-Running Timer **22**
I^2C and HAPI Configuration Register **23**
I^2C Compatible Controller **23**
Hardware Assisted Parallel Interface (HAPI) **26**
Processor Status and Control Register **27**
Interrupts **28**
Interrupt Vectors 29
Interrupt Latency 30
USB Bus Reset Interrupt 30
Timer Interrupt 30
USB Endpoint Interrupts 30
USB Hub Interrupt 30
DAC Interrupt 31
GPIO and HAPI Interrupt 31
I^2C Interrupt 32
USB Overview **32**
USB Serial Interface Engine 32
USB Enumeration 32
USB Hub **33**
Connecting and Disconnecting a USB Device 33
Enabling and Disabling a USB Device 34
Hub Downstream Ports Status and Control 35
Downstream Port Suspend and Resume 36
USB Upstream Port Status and Control 38
USB SIE Operation **39**
USB Device Addresses 39
USB Device Endpoints 39
USB Control Endpoint Mode Registers 39
USB Non Control Endpoint Mode Registers 41
USB Endpoint Counter Registers 41
Endpoint Mode and Count Registers Update and Locking Mechanism 42
USB Mode Tables **44**
Register Summary **48**
Sample Schematic **50**
Absolute Maximum Ratings **51**
Electrical Characteristics **51**
Switching Characteristics **53**
Ordering Information **55**
Ordering Code Definitions 55
Package Diagrams **56**
Quad Flat Package No Leads (QFN) Package Design Notes **58**
Acronyms **59**
Document Conventions **59**
Units of Measure 59
Document History Page **60**
Sales, Solutions, and Legal Information **61**
Worldwide Sales and Design Support 61
Products 61
PSoC® Solutions 61
Cypress Developer Community 61
Technical Support 61

Downloaded from Arrow.com.

Pin Configurations

Figure 1. CY7C66013C 48-pin SSOP and CY7C66113C 56-pin SSOP

TOP VIEW

CY7C66013C

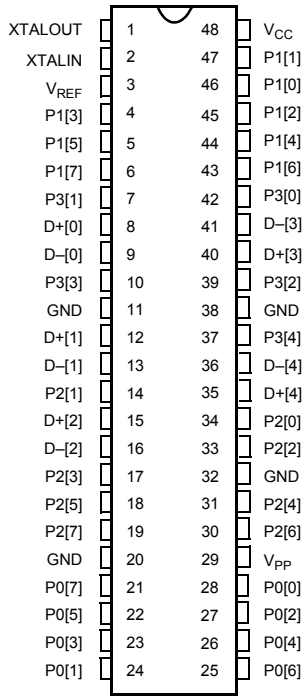

CY7C66113C

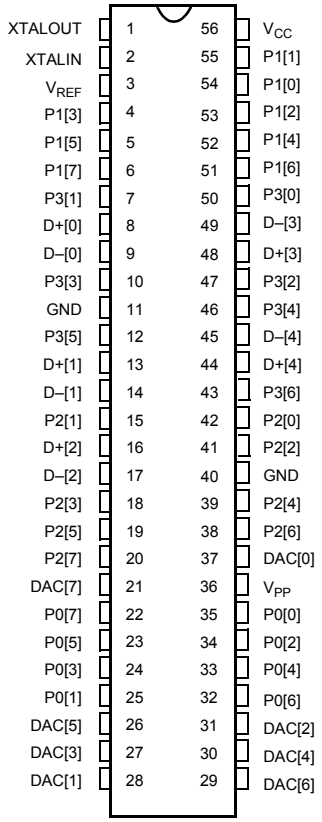

Downloaded from Arrow.com.

Figure 2. CY7C66113C 56-pin QFN

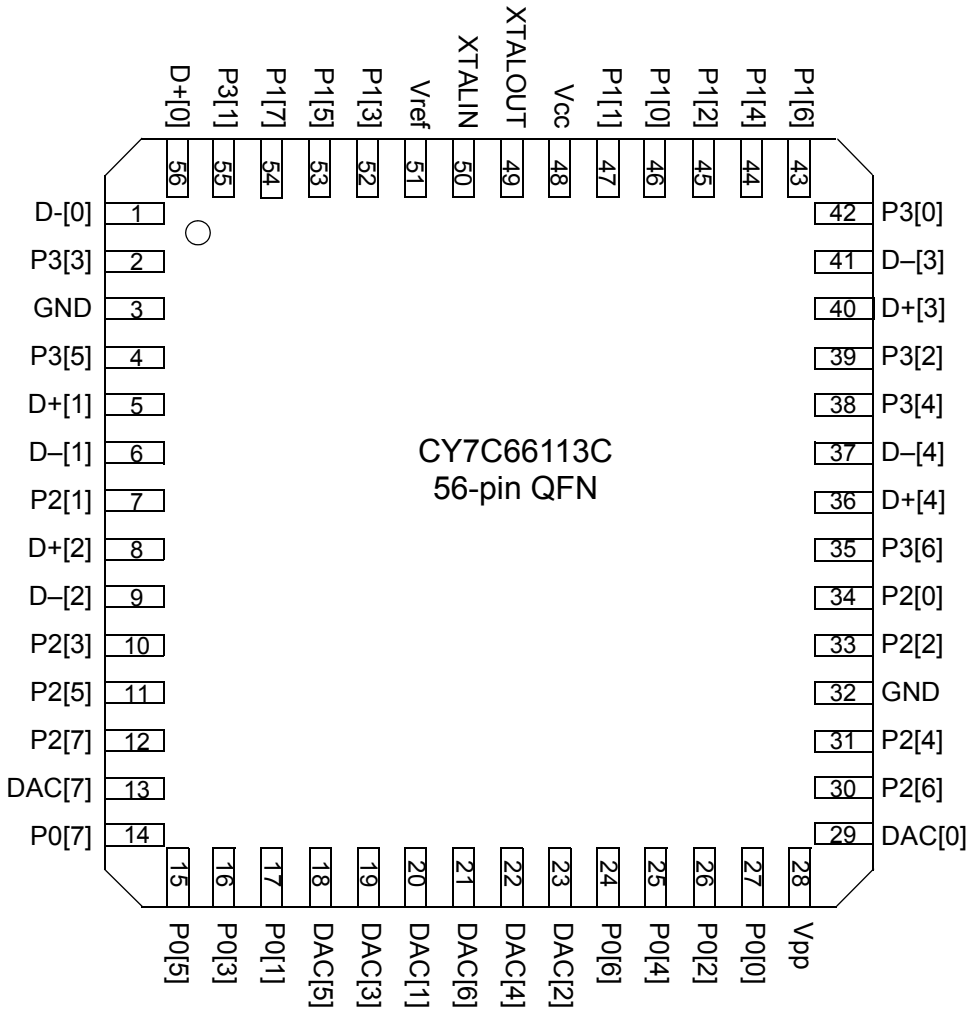

Downloaded from Arrow.com.

Figure 3. CY7C66113C DIE

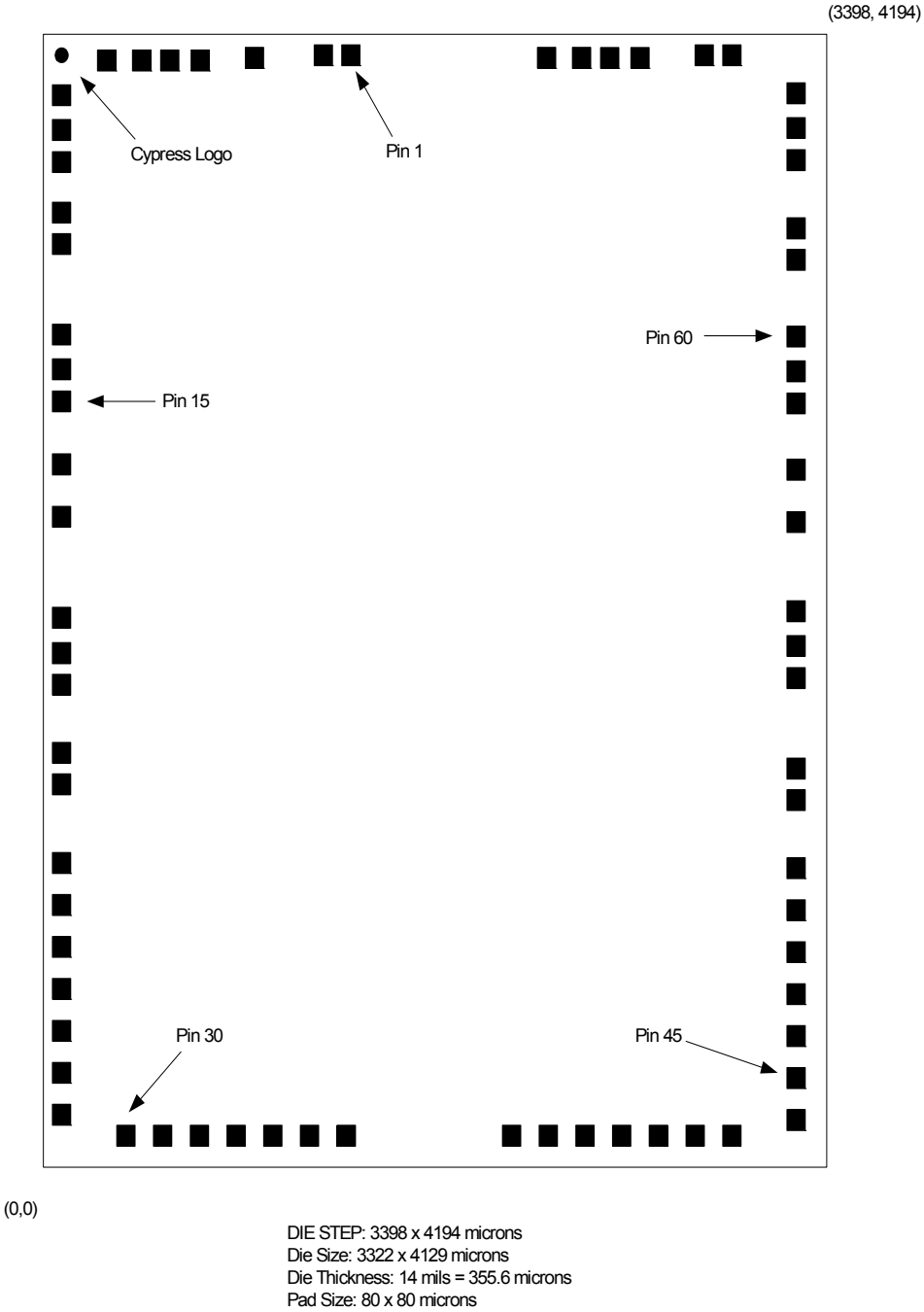

DIE STEP: 3398 x 4194 microns
Die Size: 3322 x 4129 microns
Die Thickness: 14 mils = 355.6 microns
Pad Size: 80 x 80 microns

Downloaded from Arrow.com.

Table 1. Pad Coordinates in Microns (0,0) to Bond Pad Centers

Pad No.	Pin Name	X	Y	Pad #	Pin Name	X	Y
1	XtalOut	1274.2	3588.8	37	DAC6	2000.6	210.6
2	XtalIn	1132.8	3588.8	38	DAC4	2103.6	210.6
3	Vref	889.85	3588.8	39	DAC2	2206.6	210.6
4	Port11b	684.65	3588.8	40	Port06	2308.4	210.6
5	Port13	581.65	3588.8	41	Port04	2411.4	210.6
6	Port15	478.65	3588.8	42	Port02	2514.4	210.6
7	Vss	375.65	3588.8	43	Port00	2617.4	210.6
8	Port17	0	3408.35	44	Vpp	2992.4	25.4
9	Port31	0	3162.05	45	DAC0	2992.4	151.75
10	Du+	0	3060.55	46	Port26	2992.4	306.15
11	Du–	0	2752.4	47	DD+6	2992.4	407.65
12	Port33	0	2650.95	48	DD–6	2992.4	715.75
13	Vss	0	2474.6	49	Port24	2992.4	817.25
14	Port35	0	2368.45	50	Vss	2992.4	923.4
15	DD+1	0	2266.95	51	Port22	2992.4	1086.75
16	DD–1	0	1958.85	52	DD+5	2992.4	1188.25
17	Port37	0	1857.35	53	DD–5	2992.4	1496.35
18	Vref	0	1680.4	54	Port20	2992.4	1597.85
19	Port21	0	1567.4	55	Vref	2992.4	1710.8
20	DD+2	0	1465.95	56	Port36	2992.4	1874.75
21	DD–2	0	1157.85	57	DD+4	2992.4	1976.25
22	Port23	0	1056.35	58	DD–4	2992.4	2284.35
23	Vss	0	880	59	Port34	2992.4	2385.85
24	Port25	0	773.85	60	Vss	2992.4	2492
25	DD+7	0	672.35	61	Port32	2992.4	2655.35
26	DD–7	0	364.25	62	DD+3	2992.4	2756.85
27	Port27	0	262.75	63	DD–3	2992.4	3064.95
28	DAC7	0	100.75	64	Port30	2992.4	3166.45
29	Vss	0	0	65	Port16	2992.4	3412.25
30	Port07	375.2	210.6	66	Port14	2634.2	3588.8
31	Port05	478.2	210.6	67	Port12	2531.2	3588.8
32	Port03	581.2	210.6	68	Port10	2428.2	3588.8
33	Port01	684.2	210.6	69	Port11	2325.2	3588.8
34	DAC5	788.4	210.6	70	VCC	2221.75	3588.8
35	DAC3	891.4	210.6	71	PadOpt	2121.75	3588.8
36	DAC1	994.4	210.6				

Downloaded from Arrow.com.

Product Summary Tables

Pin Assignments

Table 2. Pin Assignments

Name	I/O	48-pin	56-pin QFN	56-pin SSOP	Description
D+[0], D–[0]	I/O	8, 9	56, 1	8, 9	Upstream port, USB differential data.
D+[1], D–[1]	I/O	12, 13	5, 6	13, 14	Downstream port 1, USB differential data.
D+[2], D–[2]	I/O	15, 16	8, 9	16, 17	Downstream port 2, USB differential data.
D+[3], D–[3]	I/O	40, 41	40, 41	48, 49	Downstream port 3, USB differential data.
D+[4], D–[4]	I/O	35, 36	36, 37	44, 45	Downstream port 4, USB differential data.
P0[7:0]	I/O	21, 25, 22, 26, 23, 27, 24, 28	14, 15, 16, 17, 24, 25, 26, 27	22, 32, 23, 33, 24, 34, 25, 35	GPIO Port 0.
P1[7:0]	I/O	6, 43, 5, 44, 4, 45, 47, 46	52, 53, 54, 43, 44, 45, 46, 47	6, 51, 5, 52, 4, 53, 55, 54	GPIO Port 1.
P2[7:0]	I/O	19, 30, 18, 31, 17, 33, 14, 34	7, 10, 11, 12, 30, 31, 33, 34	20, 38, 19, 39, 18, 41, 15, 42	GPIO Port 2.
P3[6:0]	I/O	37, 10, 39, 7, 42	55, 2, 4, 35, 38, 39, 42,	43, 12, 46, 10, 47, 7, 50	GPIO Port 3, capable of sinking 12 mA (typical).
DAC[7:0]	I/O	n/a	13, 18, 19, 20, 21, 22, 23, 29	21, 29, 26, 30, 27, 31, 28, 37	Digital to Analog Converter (DAC) Port with programmable current sink outputs. DAC[1:0] offer a programmable range of 3.2 to 16 mA typical. DAC[7:2] have a programmable sink current range of 0.2 to 1.0 mA typical.
$XTAL_{IN}$	IN	2	50	2	6 MHz crystal or external clock input.
$XTAL_{OUT}$	OUT	1	49	1	6 MHz crystal out.
V_{PP}		29	28	36	Programming voltage supply, tie to ground during normal operation.
V_{CC}		48	48	56	Voltage supply.
GND		11, 20, 32, 38	3, 32	11, 40	Ground.
V_{REF}	IN	3	51	3	External 3.3 V supply voltage for the differential data output buffers and the D+ pull up.

I/O Register Summary

I/O registers are accessed via the I/O Read (IORD) and I/O Write (IOWR, IOWX) instructions. IORD reads data from the selected port into the accumulator. IOWR performs the reverse; it writes data from the accumulator to the selected port. Indexed I/O Write (IOWX) adds the contents of X to the address in the instruction to form the port address and writes data from the accumulator to the specified port. Specifying address 0 such as IOWX 0h indicates the I/O register is selected solely by the contents of X.

All undefined registers are reserved. It is important not to write to reserved registers as this may cause an undefined operation or increased current consumption during operation. When writing to registers with reserved bits, the reserved bits must be written with ‘0.’

Table 3. I/O Register Summary

Register Name	I/O Address	Read/Write	Function	Page
Port 0 Data	0x00	R/W	GPIO Port 0 Data	16
Port 1 Data	0x01	R/W	GPIO Port 1 Data	17
Port 2 Data	0x02	R/W	GPIO Port 2 Data	17
Port 3 Data	0x03	R/W	GPIO Port 3 Data	17
Port 0 Interrupt Enable	0x04	W	Interrupt Enable for Pins in Port 0	19
Port 1 Interrupt Enable	0x05	W	Interrupt Enable for Pins in Port 1	19
Port 2 Interrupt Enable	0x06	W	Interrupt Enable for Pins in Port 2	19
Port 3 Interrupt Enable	0x07	W	Interrupt Enable for Pins in Port 3	19
GPIO Configuration	0x08	R/W	GPIO Port Configurations	18

Downloaded from Arrow.com.

Table 3. I/O Register Summary *(continued)*

Register Name	I/O Address	Read/Write	Function	Page
HAPI and I^2C Configuration	0x09	R/W	HAPI Width and I^2C Position Configuration	23
USB Device Address A	0x10	R/W	USB Device Address A	39
EP A0 Counter Register	0x11	R/W	USB Address A, Endpoint 0 Counter	41
EP A0 Mode Register	0x12	R/W	USB Address A, Endpoint 0 Configuration	40
EP A1 Counter Register	0x13	R/W	USB Address A, Endpoint 1 Counter	41
EP A1 Mode Register	0x14	R/W	USB Address A, Endpoint 1 Configuration	41
EP A2 Counter Register	0x15	R/W	USB Address A, Endpoint 2 Counter	41
EP A2 Mode Register	0x16	R/W	USB Address A, Endpoint 2 Configuration	41
USB Status & Control	0x1F	R/W	USB Upstream Port Traffic Status and Control	38
Global Interrupt Enable	0x20	R/W	Global Interrupt Enable	28
Endpoint Interrupt Enable	0x21	R/W	USB Endpoint Interrupt Enables	28
Interrupt Vector	0x23	R	Pending Interrupt Vector Read/Clear	30
Timer (LSB)	0x24	R	Lower 8 Bits of Free-running Timer (1 MHz)	22
Timer (MSB)	0x25	R	Upper 4 Bits of Free-running Timer	22
WDT Clear	0x26	W	Watchdog Timer Clear	15
I^2C Control & Status	0x28	R/W	I^2C Status and Control	24
I^2C Data	0x29	R/W	I^2C Data	24
DAC Data	0x30	R/W	DAC Data	20
DAC Interrupt Enable	0x31	W	Interrupt Enable for each DAC Pin	21
DAC Interrupt Polarity	0x32	W	Interrupt Polarity for each DAC Pin	21
DAC Isink	0x38-0x3F	W	Input Sink Current Control for each DAC Pin	21
USB Device Address B	0x40	R/W	USB Device Address B (not used in 5-endpoint mode)	39
EP B0 Counter Register	0x41	R/W	USB Address B, Endpoint 0 Counter	41
EP B0 Mode Register	0x42	R/W	USB Address B, Endpoint 0 Configuration, or USB Address A, Endpoint 3 in 5-endpoint Mode	40
EP B1 Counter Register	0x43	R/W	USB Address B, Endpoint 1 Counter	41
EP B1 Mode Register	0x44	R/W	USB Address B, Endpoint 1 Configuration, or USB Address A, Endpoint 4 in 5-endpoint Mode	41
Hub Port Connect Status	0x48	R/W	Hub Downstream Port Connect Status	33
Hub Port Enable	0x49	R/W	Hub Downstream Ports Enable	34
Hub Port Speed	0x4A	R/W	Hub Downstream Ports Speed	34
Hub Port Control (Ports [4:1])	0x4B	R/W	Hub Downstream Ports Control	35
Hub Port Suspend	0x4D	R/W	Hub Downstream Port Suspend Control	36
Hub Port Resume Status	0x4E	R	Hub Downstream Ports Resume Status	37
Hub Ports SE0 Status	0x4F	R	Hub Downstream Ports SE0 Status	36
Hub Ports Data	0x50	R	Hub Downstream Ports Differential Data	36
Hub Downstream Force Low	0x51	R/W	Hub Downstream Ports Force LOW	35
Processor Status & Control	0xFF	R/W	Microprocessor Status and Control Register	27

Downloaded from Arrow.com.

Instruction Set Summary

Refer to the *CYASM Assembler User's Guide* for more details.

Table 4. Instruction Set Summary

Mnemonic	Operand	Opcode	Cycles
HALT		00	7
ADD A,expr	data	01	4
ADD A,[expr]	direct	02	6
ADD A,[X+expr]	index	03	7
ADC A,expr	data	04	4
ADC A,[expr]	direct	05	6
ADC A,[X+expr]	index	06	7
SUB A,expr	data	07	4
SUB A,[expr]	direct	08	6
SUB A,[X+expr]	index	09	7
SBB A,expr	data	0A	4
SBB A,[expr]	direct	0B	6
SBB A,[X+expr]	index	0C	7
OR A,expr	data	0D	4
OR A,[expr]	direct	0E	6
OR A,[X+expr]	index	0F	7
AND A,expr	data	10	4
AND A,[expr]	direct	11	6
AND A,[X+expr]	index	12	7
XOR A,expr	data	13	4
XOR A,[expr]	direct	14	6
XOR A,[X+expr]	index	15	7
CMP A,expr	data	16	5
CMP A,[expr]	direct	17	7
CMP A,[X+expr]	index	18	8
MOV A,expr	data	19	4
MOV A,[expr]	direct	1A	5
MOV A,[X+expr]	index	1B	6
MOV X,expr	data	1C	4
MOV X,[expr]	direct	1D	5
reserved		1E	
XPAGE		1F	4
MOV A,X		40	4
MOV X,A		41	4
MOV PSP,A		60	4
CALL	addr	50-5F	10
JMP	addr	80-8F	5
CALL	addr	90-9F	10
JZ	addr	A0-AF	5
JNZ	addr	B0-BF	5

Mnemonic	Operand	Opcode	Cycles
NOP		20	4
INC A	acc	21	4
INC X	x	22	4
INC [expr]	direct	23	7
INC [X+expr]	index	24	8
DEC A	acc	25	4
DEC X	x	26	4
DEC [expr]	direct	27	7
DEC [X+expr]	index	28	8
IORD expr	address	29	5
IOWR expr	address	2A	5
POP A		2B	4
POP X		2C	4
PUSH A		2D	5
PUSH X		2E	5
SWAP A,X		2F	5
SWAP A,DSP		30	5
MOV [expr],A	direct	31	5
MOV [X+expr],A	index	32	6
OR [expr],A	direct	33	7
OR [X+expr],A	index	34	8
AND [expr],A	direct	35	7
AND [X+expr],A	index	36	8
XOR [expr],A	direct	37	7
XOR [X+expr],A	index	38	8
IOWX [X+expr]	index	39	6
CPL		3A	4
ASL		3B	4
ASR		3C	4
RLC		3D	4
RRC		3E	4
RET		3F	8
DI		70	4
EI		72	4
RETI		73	8
JC	addr	C0-CF	5
JNC	addr	D0-DF	5
JACC	addr	E0-EF	7
INDEX	addr	F0-FF	14

Downloaded from Arrow.com.

Programming Model

14-bit Program Counter (PC)

The 14-bit PC allows access to up to 8 kB of PROM available with the CY7C66x13C architecture. The top 32 bytes of the ROM in the 8K part are reserved for testing purposes. The program counter is cleared during reset, such that the first instruction executed after a reset is at address 0x0000h. Typically, this is a jump instruction to a reset handler that initializes the application (see Interrupt Vectors on page 29).

The lower eight bits of the program counter are incremented as instructions are loaded and executed. The upper six bits of the program counter are incremented by executing an XPAGE instruction. The last instruction executed within a 256-byte “page” of sequential code should be an XPAGE instruction. The assembler directive “XPAGEON” causes the assembler to insert XPAGE instructions automatically. Because instructions are either one or two bytes long, the assembler may occasionally need to insert a NOP followed by an XPAGE to execute correctly.

The address of the next instruction to be executed, the carry flag, and the zero flag are saved as two bytes on the program stack during an interrupt acknowledge or a CALL instruction. The program counter, carry flag, and zero flag are restored from the program stack during a RETI instruction. Only the program counter is restored during a RET instruction.

The program counter is not accessed directly by the firmware. The program stack is examined by reading SRAM from location 0x00 and up.

Program Memory Organization

Table 5. Program Memory Space with Interrupt Vector Table

After Reset	Address	
14-bit PC	**0x0000**	Program execution begins here after a reset
	0x0002	USB bus reset interrupt vector
	0x0004	128 µs timer interrupt vector
	0x0006	1.024 ms timer interrupt vector
	0x0008	USB address A endpoint 0 interrupt vector
	0x000A	USB address A endpoint 1 interrupt vector
	0x000C	USB address A endpoint 2 interrupt vector
	0x000E	USB address B endpoint 0 interrupt vector
	0x0010	USB address B endpoint 1 interrupt vector
	0x0012	Hub interrupt vector
	0x0014	DAC interrupt vector
	0x0016	GPIO/HAPI interrupt vector
	0x0018	I^2C interrupt vector
	0x001A	**Program Memory begins here**
	0x1FDF	**8 kB (-32) PROM ends here.**

Downloaded from Arrow.com.

8-bit Accumulator (A)

The accumulator is the general purpose register for the microcontroller.

8-bit Temporary Register (X)

The "X" register is available to the firmware for temporary storage of intermediate results. The microcontroller performs indexed operations based on the value in X. Refer to the section, Indexed on page 14 for additional information.

8-bit Program Stack Pointer (PSP)

During a reset, the Program Stack Pointer (PSP) is set to 0x00 and "grows" upward from this address. The PSP may be set by firmware, using the MOV PSP,A instruction. The PSP supports interrupt service under hardware control and CALL, RET, and RETI instructions under firmware control. The PSP is not readable by the firmware.

During an interrupt acknowledge, interrupts are disabled and the 14-bit program counter, carry flag, and zero flag are written as two bytes of data memory. The first byte is stored in the memory addressed by the PSP, then the PSP is incremented. The second byte is stored in memory addressed by the PSP, and the PSP is incremented again. The overall effect is to store the program counter and flags on the program "stack" and increment the PSP by two.

The Return From Interrupt (RETI) instruction decrements the PSP, then restores the second byte from memory addressed by the PSP. The PSP is decremented again and the first byte is restored from memory addressed by the PSP. After the program counter and flags are restored from stack, the interrupts are enabled. The overall effect is to restore the program counter and flags from the program stack, decrement the PSP by two, and re-enable interrupts.

The Call Subroutine (CALL) instruction stores the program counter and flags on the program stack and increments the PSP by two.

The Return From Subroutine (RET) instruction restores the program counter but not the flags from the program stack and decrements the PSP by two.

Data Memory Organization

The CY7C66x13C microcontrollers provide 256 bytes of data RAM. Normally, the SRAM is partitioned into four areas: program stack, user variables, data stack, and USB endpoint FIFOs. The following is one example of where the program stack, data stack, and user variables areas are located.

Table 6. SRAM Areas

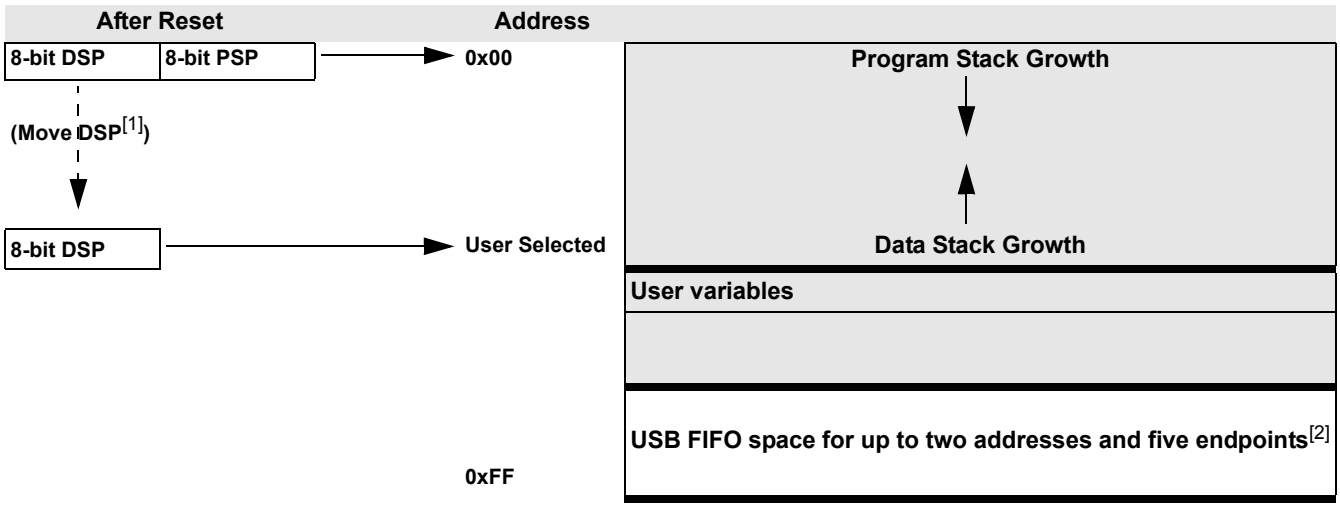

8-bit Data Stack Pointer (DSP)

The Data Stack Pointer (DSP) supports PUSH and POP instructions that use the data stack for temporary storage. A PUSH instruction pre-decrements the DSP, then writes data to the memory location addressed by the DSP. A POP instruction reads data from the memory location addressed by the DSP, then post-increments the DSP.

During a reset, the DSP is reset to 0x00. A PUSH instruction when DSP equals 0x00 writes data at the top of the data RAM (address 0xFF). This writes data to the memory area reserved for USB endpoint FIFOs. Therefore, the DSP should be indexed at an appropriate memory location that does not compromise the Program Stack, user defined memory (variables), or the USB endpoint FIFOs.

For USB applications, the firmware should set the DSP to an appropriate location to avoid a memory conflict with RAM dedicated to USB FIFOs. The memory requirements for the USB endpoints are described in USB Device Endpoints on page 39. Example assembly instructions to do this with two device addresses (FIFOs begin at 0xD8) are shown:

- MOV A,20h; Move 20 hex into Accumulator (must be D8h or less)
- SWAP A,DSP; swap accumulator value into DSP register.

Notes
1. Refer to 8-bit Data Stack Pointer (DSP) for a description of DSP.
2. Endpoint sizes are fixed by the Endpoint Size Bit (I/O register 0x1F, Bit 7), see Table 47.

Downloaded from Arrow.com.

Address Modes

The CY7C66013C and CY7C66113C microcontrollers support three addressing modes for instructions that require data operands: data, direct, and indexed.

Data (Immediate)

"Data" address mode refers to a data operand that is actually a constant encoded in the instruction. As an example, consider the instruction that loads A with the constant 0xD8:

```
MOV A, 0D8h.
```

This instruction requires two bytes of code where the first byte identifies the "MOV A" instruction with a data operand as the second byte. The second byte of the instruction is the constant "0xD8". A constant may be referred to by name if a prior "EQU" statement assigns the constant value to the name. For example, the following code is equivalent to the example described earlier:

```
DSPINIT: EQU 0D8h
MOV A, DSPINIT.
```

Direct

"Direct" address mode is used when the data operand is a variable stored in SRAM. In that case, the one byte address of the variable is encoded in the instruction. As an example, consider an instruction that loads A with the contents of memory address location 0x10:

```
MOV A, [10h].
```

Normally, variable names are assigned to variable addresses using "EQU" statements to improve the readability of the assembler source code. As an example, the following code is equivalent to the example described earlier:

```
buttons: EQU 10h
MOV A, [buttons].
```

Indexed

"Indexed" address mode allows the firmware to manipulate arrays of data stored in SRAM. The address of the data operand is the sum of a constant encoded in the instruction and the contents of the "X" register. Normally, the constant is the "base" address of an array of data and the X register contains an index that indicates which element of the array is actually addressed:

```
array: EQU 10h
MOV X, 3
MOV A, [X+array].
```

This has the effect of loading A with the fourth element of the SRAM "array" that begins at address 0x10. The fourth element would be at address 0x13.

Clocking

Figure 4. Clock Oscillator On-Chip Circuit

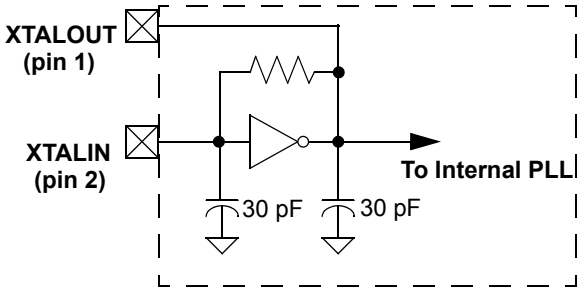

The XTALIN and XTALOUT are the clock pins to the microcontroller. The user connects an external oscillator or a crystal to these pins. When using an external crystal, keep PCB traces between the chip leads and crystal as short as possible (less than 2 cm). A 6 MHz fundamental frequency parallel resonant crystal is connected to these pins to provide a reference frequency for the internal PLL. The two internal 30 pF load caps appear in series to the external crystal and would be equivalent to a 15 pF load. Therefore, the crystal must have a required load capacitance of about 15–18 pF. A ceramic resonator does not allow the microcontroller to meet the timing specifications of full speed USB and so a ceramic resonator is not recommended with these parts.

An external 6 MHz clock is applied to the XTALIN pin if the XTALOUT pin is left open. Grounding the XTALOUT pin when driving XTALIN with an oscillator does not work because the internal clock is effectively shorted to ground.

Downloaded from Arrow.com.

Reset

The CY7C66x13C supports two resets: POR and a Watchdog Reset (WDR). Each of these resets causes:

- All registers to be restored to their default states.
- The USB device addresses to be set to 0.
- All interrupts to be disabled.
- The PSP and DSP to be set to memory address 0x00.

The occurrence of a reset is recorded in the Processor Status and Control Register, as described in Processor Status and Control Register on page 27. Bits 4 and 6 are used to record the occurrence of POR and WDR, respectively. Firmware interrogates these bits to determine the cause of a reset.

Program execution starts at ROM address 0x0000 after a reset. Although this looks similar to interrupt vector 0, there is an important difference. Reset processing does NOT push the program counter, carry flag, and zero flag onto program stack. The firmware reset handler should configure the hardware before the “main” loop of code. Attempting to execute a RET or RETI in the firmware reset handler causes unpredictable execution results.

Power on Reset

When V_{CC} is first applied to the chip, the POR signal is asserted and the CY7C66x13C enters a “semi-suspend” state. During the semi-suspend state, which is different from the suspend state defined in the USB specification, the oscillator and all other blocks of the part are functional, except for the CPU. This semi-suspend time ensures that both a valid V_{CC} level is reached and that the internal PLL has time to stabilize before full operation begins. When the V_{CC} rises above approximately 2.5 V, and the oscillator is stable, the POR is deasserted and the on-chip timer starts counting. The first 1 ms of suspend time is not interruptible, and the semi-suspend state continues for an additional 95 ms unless the count is bypassed by a USB Bus Reset on the upstream port. The 95 ms provides time for V_{CC} to stabilize at a valid operating voltage before the chip executes code.

If a USB Bus Reset occurs on the upstream port during the 95 ms semi-suspend time, the semi-suspend state is aborted and program execution begins immediately from address 0x0000. In this case, the Bus Reset interrupt is pending but not serviced until firmware sets the USB Bus Reset Interrupt Enable bit (bit 0 of register 0x20) and enables interrupts with the EI command.

The POR signal is asserted whenever V_{CC} drops below approximately 2.5 V, and remains asserted until V_{CC} rises above this level again. Behavior is the same as described earlier.

Watchdog Reset

The WDR occurs when the internal WDT rolls over. Writing any value to the write only Watchdog Restart Register at address 0x26 clears the timer. The timer rolls over and WDR occurs if it is not cleared within t_{WATCH} (8 ms minimum) of the last clear. Bit 6 of the Processor Status and Control Register is set to record this event (the register contents are set to 010X0001 by the WDR). A WDT Reset lasts for 2 ms, after which the microcontroller begins execution at ROM address 0x0000.

The USB transmitter is disabled by a WDR because the USB Device Address Registers are cleared (see USB Device Addresses on page 39). Otherwise, the USB Controller responds to all address 0 transactions.

It is possible to set the WDR bit of the Processor Status and Control Register (0xFF) following a POR event. If a firmware interrogates the Processor Status and Control Register for a set condition on the WDR bit, the WDR bit should be ignored if the POR (bit 3 of register 0xFF) bit is set.

Figure 5. Watchdog Reset

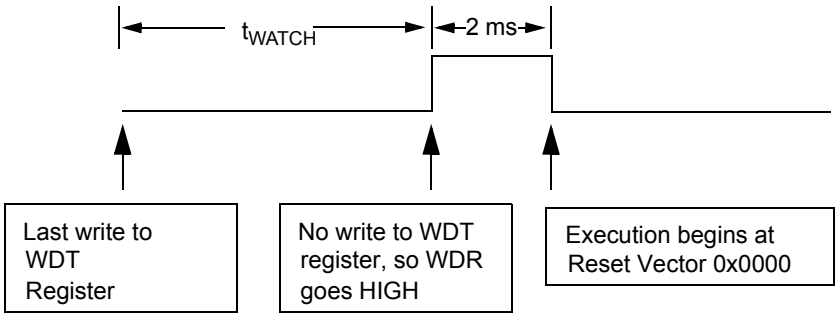

Downloaded from Arrow.com.

Suspend Mode

The CY7C66x13C is placed into a low power state by setting the Suspend bit of the Processor Status and Control register. All logic blocks in the device are turned off except the GPIO interrupt logic and the USB receiver. The clock oscillator, PLL, and the free-running and WDTs are shut down. Only the occurrence of an enabled GPIO interrupt or non idle bus activity at a USB upstream or downstream port wakes the part from suspend. The Run bit in the Processor Status and Control Register must be set to resume a part out of suspend.

The clock oscillator restarts immediately after exiting suspend mode. The microcontroller returns to a fully functional state 1 ms after the oscillator is stable. The microcontroller executes the instruction following the I/O write that placed the device into suspend mode before servicing any interrupt requests.

The GPIO interrupt allows the controller to wake up periodically and poll system components while maintaining a very low average power consumption. To achieve the lowest possible current during suspend mode, all I/O should be held at V_{CC} or Gnd. This also applies to internal port pins that may not be bonded in a particular package.

Typical code for entering suspend is given here:

```
     ...  ; All GPIO set to low power state (no
floating pins)
     ...  ; Enable GPIO interrupts if desired
for wakeup
     mov a, 09h; Set suspend and run bits
     iowr FFh; Write to Status and Control
Register – Enter suspend, wait for USB activity
(or GPIO Interrupt)
     nop  ; This executes before any ISR
```

General Purpose I/O (GPIO) Ports

Figure 6. Block Diagram of a GPIO Pin

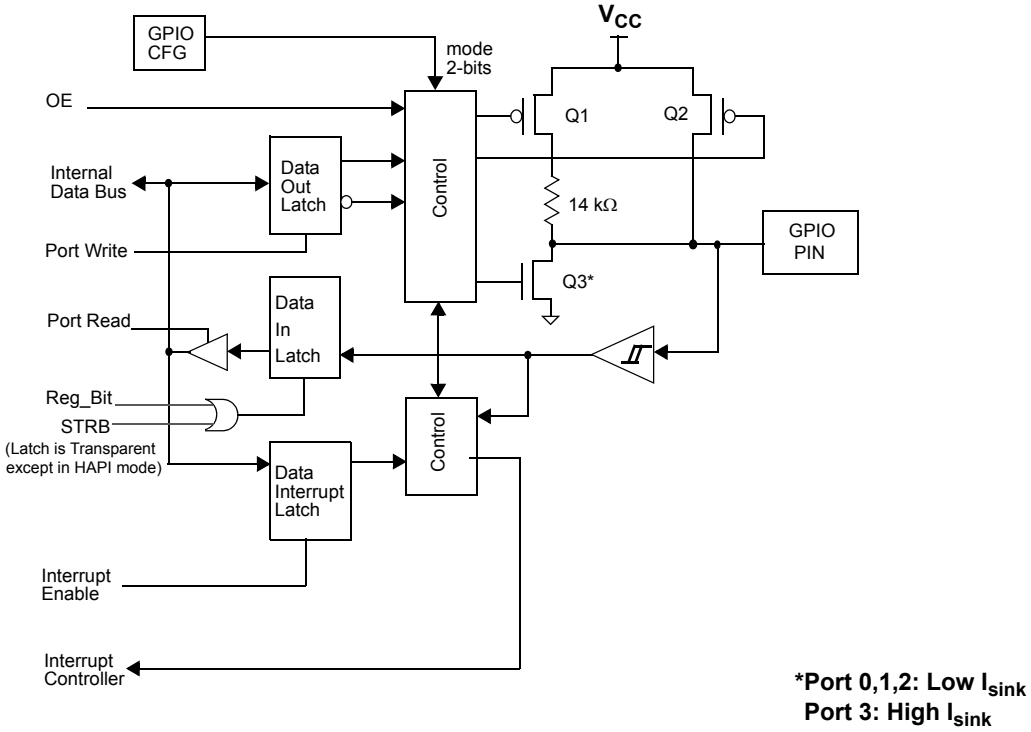

There are up to 31 GPIO pins (P0[7:0], P1[7:0], P2[7:0], and P3[6:0]) for the hardware interface. The number of GPIO pins changes based on the package type of the chip. Each port is configured as inputs with internal pull ups, open drain outputs, or traditional CMOS outputs. Port 3 offers a higher current drive, with typical current sink capability of 12 mA. The data for each GPIO port is accessible through the data registers. Port data registers are shown in Table 7 on page 17 through Table 10 on page 17, and are set to 1 on reset.

Downloaded from Arrow.com.

Table 7. Port 0 Data

Port 0 Data **ADDRESS 0x00**

Bit #	7	6	5	4	3	2	1	0
Bit Name	P0.7	P0.6	P0.5	P0.4	P0.3	P0.2	P0.1	P0.0
Read/Write	R/W	R/W	R/W	R/W	R/W	R/W	R/W	R/W
Reset	1	1	1	1	1	1	1	1

Table 8. Port1 Data

Port 1Data **ADDRESS 0x01**

Bit #	7	6	5	4	3	2	1	0
Bit Name	P1.7	P1.6	P1.5	P1.4	P1.3	P1.2	P1.1	P1.0
Read/Write	R/W	R/W	R/W	R/W	R/W	R/W	R/W	R/W
Reset	1	1	1	1	1	1	1	1

Table 9. Port 2 Data

Port 2 Data **ADDRESS 0x02**

Bit #	7	6	5	4	3	2	1	0
Bit Name	P2.7	P2.6	P2.5	P2.4	P2.3	P2.2	P2.1	P2.0
Read/Write	R/W	R/W	R/W	R/W	R/W	R/W	R/W	R/W
Reset	1	1	1	1	1	1	1	1

Table 10. Port 3 Data

Port 3 Data **ADDRESS 0x03**

Bit #	7	6	5	4	3	2	1	0
Bit Name	Reserved	P3.6 CY7C66113C only	P3.5 CY7C66113C only	P3.4	P3.3	P3.2	P3.1	P3.0
Read/Write	R/W	R/W	R/W	R/W	R/W	R/W	R/W	R/W
Reset	-	1	1	1	1	1	1	1

Special care should be taken with any unused GPIO data bits. An unused GPIO data bit, either a pin on the chip or a port bit that is not bonded on a particular package, must not be left floating when the device enters the suspend state. If a GPIO data bit is left floating, the leakage current caused by the floating bit may violate the suspend current limitation specified by the USB specifications. If a ‘1’ is written to the unused data bit and the port is configured with open drain outputs, the unused data bit remains in an indeterminate state. Therefore, if an unused port bit is programmed in open-drain mode, it must be written with a ‘0’. Notice that the CY7C66013C always requires that P3[7:5] be written with a ‘0’. When the CY7C66113C is used the P3[7] should be written with a ‘0’.

In normal non HAPI mode, reads from a GPIO port always return the present state of the voltage at the pin, independent of the settings in the Port Data Registers. If HAPI mode is activated for a port, reads of that port return latched data as controlled by the HAPI signals (see Hardware Assisted Parallel Interface (HAPI) on page 26). During reset, all of the GPIO pins are set to a high impedance input state (‘1’ in open drain mode). Writing a ‘0’ to a GPIO pin drives the pin LOW. In this state, a ‘0’ is always read on that GPIO pin unless an external source overdrives the internal pull down device.

Downloaded from Arrow.com.

GPIO Configuration Port

Every GPIO port is programmed as inputs with internal pull ups, outputs LOW or HIGH, or Hi-Z (floating, the pin is not driven internally). In addition, the interrupt polarity for each port is programmed. The Port Configuration bits (Table 11) and the Interrupt Enable bit (Table 9 on page 17 through Table 16 on page 19) determine the interrupt polarity of the port pins.

Table 11. GPIO Configuration Register

GPIO Configuration **ADDRESS 0x08**

Bit #	7	6	5	4	3	2	1	0
Bit Name	Port 3 Config Bit 1	Port 3 Config Bit 0	Port 2 Config Bit 1	Port 2 Config Bit 0	Port 1 Config Bit 1	Port 1 Config Bit 0	Port 0 Config Bit 1	Port 0 Config Bit 0
Read/Write	R/W	R/W	R/W	R/W	R/W	R/W	R/W	R/W
Reset	0	0	0	0	0	0	0	0

As shown in Table 12, a positive polarity on an input pin represents a rising edge interrupt (LOW to HIGH), and a negative polarity on an input pin represents a falling edge interrupt (HIGH to LOW).

The GPIO interrupt is generated when all of the following conditions are met: the Interrupt Enable bit of the associated Port Interrupt Enable Register is enabled, the GPIO Interrupt Enable bit of the Global Interrupt Enable Register (Table 31 on page 28) is enabled, the Interrupt Enable Sense (bit 2, Table 30 on page 27) is set, and the GPIO pin of the port sees an event matching the interrupt polarity.

The driving state of each GPIO pin is determined by the value written to the pin's Data Register (Table 7 on page 17 through Table 10 on page 17) and by its associated Port Configuration bits as shown in the GPIO Configuration Register (Table 9 on page 17). These ports are configured on a per port basis, so all pins in a given port are configured together. The possible port configurations are detailed in Table 12. As shown in this table, when a GPIO port is configured with CMOS outputs, interrupts from that port are disabled.

During reset, all the bits in the GPIO Configuration Register are written with '0' to select Hi-Z mode for all GPIO ports as the default configuration.

Table 12. GPIO Port Output Control Truth Table and Interrupt Polarity

Port Config Bit 1	Port Config Bit 0	Data Register	Output Drive Strength	Interrupt Enable Bit	Interrupt Polarity
1	1	0	Output LOW	0	Disabled
		1	Resistive	1	– (Falling Edge)
1	0	0	Output LOW	0	Disabled
		1	Output HIGH	1	Disabled
0	1	0	Output LOW	0	Disabled
		1	Hi-Z	1	– (Falling Edge)
0	0	0	Output LOW	0	Disabled
		1	Hi-Z	1	+ (Rising Edge)

Q1, Q2, and Q3 discussed here are the transistors referenced in Figure 6 on page 16. The available GPIO drive strength are:

- Output LOW Mode: The pin's Data Register is set to '0'

  Writing '0' to the pin's Data Register puts the pin in output LOW mode, regardless of the contents of the Port Configuration Bits[1:0]. In this mode, Q1 and Q2 are OFF. Q3 is ON. The GPIO pin is driven LOW through Q3.

- Output HIGH Mode: The pin's Data Register is set to 1 and the Port Configuration Bits[1:0] is set to '10'

  In this mode, Q1 and Q3 are OFF. Q2 is ON. The GPIO is pulled up through Q2. The GPIO pin is capable of sourcing current.

- Resistive Mode: The pin's Data Register is set to 1 and the Port Configuration Bits[1:0] is set to '11'

  Q2 and Q3 are OFF. Q1 is ON. The GPIO pin is pulled up with an internal 14 kΩ resistor. In resistive mode, the pin may serve as an input. Reading the pin's Data Register returns a logic HIGH if the pin is not driven LOW by an external source.

- Hi-Z Mode: The pin's Data Register is set to1 and Port Configuration Bits[1:0] is set either '00' or '01'

  Q1, Q2, and Q3 are all OFF. The GPIO pin is not driven internally. In this mode, the pin may serve as an input. Reading the Port Data Register returns the actual logic value on the port pins.

Downloaded from Arrow.com.

GPIO Interrupt Enable Ports

Each GPIO pin is individually enabled or disabled as an interrupt source. The Port 0–3 Interrupt Enable registers provide this feature with an interrupt enable bit for each GPIO pin. When HAPI mode is enabled the GPIO interrupts are blocked, including ports not used by HAPI, so GPIO pins are not used as interrupt sources.

During a reset, GPIO interrupts are disabled by clearing all of the GPIO interrupt enable ports. Writing a '1' to a GPIO Interrupt Enable bit enables GPIO interrupts from the corresponding input pin. All GPIO pins share a common interrupt, as discussed in GPIO and HAPI Interrupt on page 31.

Table 13. Port 0 Interrupt Enable

Port 0 Interrupt Enable **ADDRESS 0x04**

Bit #	7	6	5	4	3	2	1	0
Bit Name	P0.7 Intr Enable	P0.6 Intr Enable	P0.5 Intr Enable	P0.4 Intr Enable	P0.3 Intr Enable	P0.2 Intr Enable	P0.1 Intr Enable	P0.0 Intr Enable
Read/Write	W	W	W	W	W	W	W	W
Reset	0	0	0	0	0	0	0	0

Table 14. Port 1 Interrupt Enable

Port 1 Interrupt Enable **ADDRESS 0x05**

Bit #	7	6	5	4	3	2	1	0
Bit Name	P1.7 Intr Enable	P1.6 Intr Enable	P1.5 Intr Enable	P1.4 Intr Enable	P1.3 Intr Enable	P1.2 Intr Enable	P1.1 Intr Enable	P1.0 Intr Enable
Read/Write	W	W	W	W	W	W	W	W
Reset	0	0	0	0	0	0	0	0

Table 15. Port 2 Interrupt Enable

Port 2 Interrupt Enable **ADDRESS 0x06**

Bit #	7	6	5	4	3	2	1	0
Bit Name	P2.7 Intr Enable	P2.6 Intr Enable	P2.5 Intr Enable	P2.4 Intr Enable	P2.3 Intr Enable	P2.2 Intr Enable	P2.1 Intr Enable	P2.0 Intr Enable
Read/Write	W	W	W	W	W	W	W	W
Reset	0	0	0	0	0	0	0	0

Table 16. Port 3 Interrupt Enable

Port 3 Interrupt Enable **ADDRESS 0x07**

Bit #	7	6	5	4	3	2	1	0
Bit Name	Reserved	P3.6 Intr Enable CY7C66113C only	P3.5 Intr Enable CY7C66113C only	P3.4 Intr Enable	P3.3 Intr Enable	P3.2 Intr Enable	P3.1 Intr Enable	P3.0 Intr Enable
Read/Write	W	W	W	W	W	W	W	W
Reset	0	0	0	0	0	0	0	0

Downloaded from Arrow.com.

DAC Port

The CY7C66113C features a programmable sink current 8-bit port, which is also known as DAC port. Each of these port I/O pins have a programmable current sink. Writing a '1' to a DAC I/O pin disables the output current sink (I_{sink} DAC) and drives the I/O pin HIGH through an integrated 14 kΩ resistor. When a '0' is written to a DAC I/O pin, the I_{sink} DAC is enabled and the pull up resistor is disabled. This causes the I_{sink} DAC to sink current to drive the output LOW. Figure 7 shows a block diagram of the DAC port pin.

Figure 7. Block Diagram of a DAC Pin

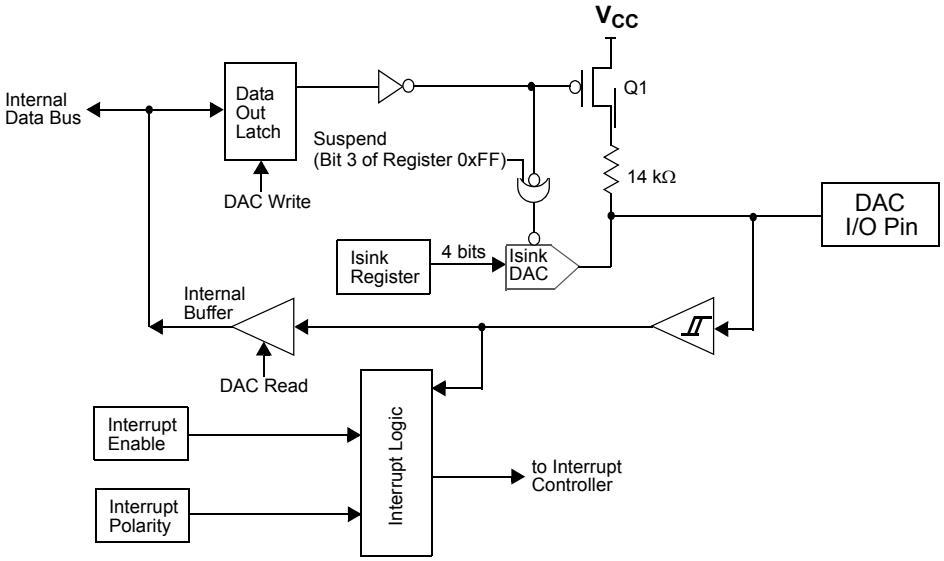

The amount of sink current for the DAC I/O pin is programmable over 16 values based on the contents of the DAC Isink Register (Table 18 on page 21) for that output pin. DAC[1:0] are high current outputs that are programmable from 3.2 mA to 16 mA (typical). DAC[7:2] are low current outputs, programmable from 0.2 mA to 1.0 mA (typical).

When the suspend bit in Processor Status and Control Register (Table 30 on page 27) is set, the Isink DAC block of the DAC circuitry is disabled. Special care should be taken when the CY7C66113C device is placed in the suspend. The DAC Port Data Register (Table 17) should normally be loaded with all '1's (Table 30 on page 27) before setting the suspend bit. If any of the DAC bits are set to '0' when the device is suspended, that DAC input floats. The floating pin could result in excessive current consumption by the device, unless an external load places the pin in a deterministic state.

Table 17. DAC Port Data

DAC Port Data **ADDRESS 0x30**

Bit #	7	6	5	4	3	2	1	0
Bit Name	DAC[7]	DAC[6]	DAC[5]	DAC[4]	DAC[3]	DAC[2]	DAC[1]	DAC[0]
Read/Write	R/W	R/W	R/W	R/W	R/W	R/W	R/W	R/W
Reset	1	1	1	1	1	1	1	1

Bit [1..0]: High Current Output 3.2 mA to 16 mA typical

1 = I/O pin is an output pulled HGH through the 14 kΩ resistor.
0 = I/O pin is an input with an internal 14 kΩ pull up resistor.

Bit [7..2]: Low Current Output 0.2 mA to 1 mA typical

1 = I/O pin is an output pulled HGH through the 14 kΩ resistor.
0 = I/O pin is an input with an internal 14 kΩ pull up resistor.

Downloaded from Arrow.com.

DAC Isink Registers

Each DAC I/O pin has an associated DAC Isink register to program the output sink current when the output is driven LOW. The first Isink register (0x38) controls the current for DAC[0], the second (0x39) for DAC[1], and so on until the Isink register at 0x3F, controls the current to DAC[7].

Table 18. DAC Sink Register

DAC Sink Register **ADDRESS 0x38 –0x3F**

Bit #	7	6	5	4	3	2	1	0
Bit Name	Reserved	Reserved	Reserved	Reserved	Isink[3]	Isink[2]	Isink[1]	Isink[0]
Read/Write					W	W	W	W
Reset	-	-	-	-	0	0	0	0

Bit [3..0]: Isink [x] (x= 0..3)

Writing all ‘0’s to the Isink register causes 1/5 of the max current to flow through the DAC I/O pin. Writing all ‘1’s to the Isink register provides the maximum current flow through the pin. The other 14 states of the DAC sink current are evenly spaced between these two values.

Bit [7..4]: Reserved

DAC Port Interrupts

A DAC port interrupt is enabled or disabled for each pin individually. The DAC Port Interrupt Enable register provides this feature with an interrupt enable bit for each DAC I/O pin. All of the DAC Port Interrupt Enable register bits are cleared to ‘0’ during a reset. All DAC pins share a common interrupt, as explained in DAC Interrupt on page 31.

Table 19. DAC Port Interrupt Enable

DAC Port Interrupt **ADDRESS 0x31**

Bit #	7	6	5	4	3	2	1	0
Bit Name	Enable Bit 7	Enable Bit 6	Enable Bit 5	Enable Bit 4	Enable Bit 3	Enable Bit 2	Enable Bit 1	Enable Bit 0
Read/Write	W	W	W	W	W	W	W	W
Reset	0	0	0	0	0	0	0	0

Bit [7..0]: Enable bit x (x= 0..7)

1 = Enables interrupts from the corresponding bit position;
0 = Disables interrupts from the corresponding bit position

As an additional benefit, the interrupt polarity for each DAC pin is programmable with the DAC Port Interrupt Polarity register. Writing a ‘0’ to a bit selects negative polarity (falling edge) that causes an interrupt (if enabled) if a falling edge transition occurs on the corresponding input pin. Writing a ‘1’ to a bit in this register selects positive polarity (rising edge) that causes an interrupt (if enabled) if a rising edge transition occurs on the corresponding input pin. All of the DAC Port Interrupt Polarity register bits are cleared during a reset.

Table 20. DAC Port Interrupt Polarity

DAC I/O Interrupt Polarity **ADDRESS 0x32**

Bit #	7	6	5	4	3	2	1	0
Bit Name	Polarity Bit 7	Polarity Bit 6	Polarity Bit 5	Polarity Bit 4	Polarity Bit 3	Polarity Bit 2	Polarity Bit 1	Polarity Bit 0
Read/Write	W	W	W	W	W	W	W	W
Reset	0	0	0	0	0	0	0	0

Bit [7..0]: Polarity bit x (x= 0..7)

1= Selects positive polarity (rising edge) that causes an interrupt (if enabled); 0 = Selects negative polarity (falling edge) that causes an interrupt (if enabled).

Downloaded from Arrow.com.

12-bit Free-Running Timer

The 12-bit timer operates with a 1 µs tick, provides two interrupts (128 µs and 1.024 ms) and allows the firmware to directly time events that are up to 4 ms in duration. The lower eight bits of the timer is read directly by the firmware. Reading the lower 8 bits latches the upper four bits into a temporary register. When the firmware reads the upper four bits of the timer, it is actually reading the count stored in the temporary register. The effect of this is to ensure a stable 12-bit timer value is read, even when the two reads are separated in time.

Table 21. Timer LSB Register

Timer LSB **ADDRESS 0x24**

Bit #	7	6	5	4	3	2	1	0
Bit Name	Timer Bit 7	Timer Bit 6	Timer Bit 5	Timer Bit 4	Timer Bit 3	Timer Bit 2	Timer Bit 1	Timer Bit 0
Read/Write	R	R	R	R	R	R	R	R
Reset	0	0	0	0	0	0	0	0

Bit [7:0]: Timer lower eight bits

Table 22. Timer MSB Register

Timer MSB **ADDRESS 0x25**

Bit #	7	6	5	4	3	2	1	0
Bit Name	Reserved	Reserved	Reserved	Reserved	Timer Bit 11	Timer Bit 10	Timer Bit 9	Timer Bit 8
Read/Write	-	-	-	-	R	R	R	R
Reset	0	0	0	0	0	0	0	0

Bit [3:0]: Timer higher nibble

Bit [7:4]: Reserved

Figure 8. Timer Block Diagram

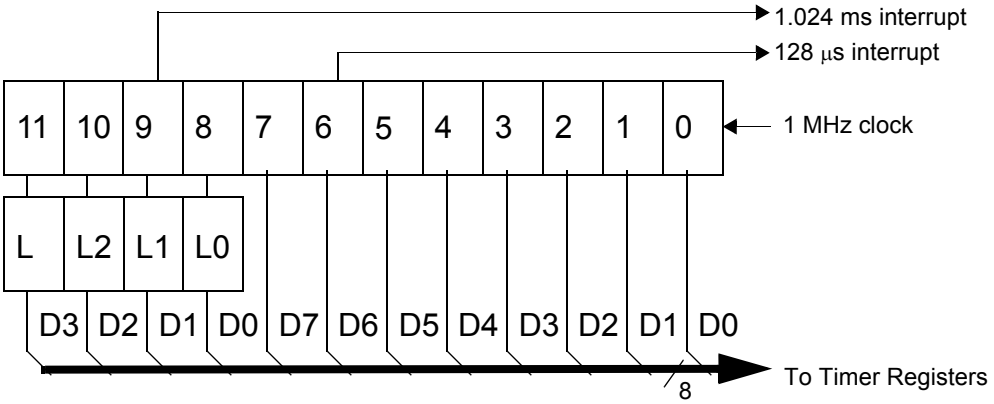

Downloaded from Arrow.com.

I²C and HAPI Configuration Register

Internal hardware supports communication with external devices through two interfaces: a two wire I²C compatible, and a HAPI for 1, 2, or 3 byte transfers. The I²C compatible and HAPI functions, share a common configuration register (see Table 23)[3]. All bits of this register are cleared on reset.

Table 23. HAPI/I²C Configuration Register

I²C Configuration **ADDRESS 0x09**

Bit #	7	6	5	4	3	2	1	0
Bit Name	I²C Position	Reserved	LEMPTY Polarity	DRDY Polarity	Latch Empty	Data Ready	HAPI Port Width Bit 1	HAPI Port Width Bit 0
Read/Write	R/W	-	R/W	R/W	R	R	R/W	R/W
Reset	0	0	0	0	0	0	0	0

Bits [7,1:0] of the HAPI and I²C Configuration Register control the pin out configuration of the HAPI and I²C compatible interfaces. Bits [5:2] are used in HAPI mode only, and are described in Hardware Assisted Parallel Interface (HAPI) on page 26. Table 24 shows the HAPI port configurations, and Table 25 shows I²C pin location configuration options. These I²C compatible options exist due to pin limitations in certain packages, and to allow simultaneous HAPI and I²C compatible operation.

HAPI operation is enabled whenever either HAPI Port Width Bit (Bit 1 or 0) is non zero. This affects GPIO operation as described in Hardware Assisted Parallel Interface (HAPI) on page 26. The I²C compatible interface must be separately enabled.

Table 24. HAPI Port Configuration

Port Width (Bit 0 and 1, Figure 23)	HAPI Port Width
11	24 Bits: P3[7:0], P1[7:0], P0[7:0]
10	16 Bits: P1[7:0], P0[7:0]
01	8 Bits: P0[7:0]
00	No HAPI Interface

Table 25. I²C Port Configuration

I²C Position (Bit 7, Table 23 on page 23)	I²C Port Width (Bit 1, Table 23 on page 23)	I²C Position
Don't Care	1	I²C on P2[1:0], 0:SCL, 1:SDA
0	0	I²C on P1[1:0], 0:SCL, 1:SDA
1	0	I²C on P2[1:0], 0:SCL, 1:SDA

I²C Compatible Controller

The I²C compatible block provides a versatile two wire communication with external devices, supporting master, slave, and multi-master modes of operation. The I²C compatible block functions by handling the low level signaling in hardware, and issuing interrupts as needed to allow firmware to take appropriate action during transactions. While waiting for firmware response, the hardware keeps the I²C compatible bus idle if necessary.

The I²C compatible interface generates an interrupt to the microcontroller at the end of each received or transmitted byte, when a stop bit is detected by the slave when in receive mode, or when arbitration is lost. Details of the interrupt responses are given in Hardware Assisted Parallel Interface (HAPI) on page 26.

The I²C compatible interface consists of two registers, an I²C Data Register (Table 14 on page 19) and an I²C Status and Control Register (Table 27 on page 24). The Data Register is implemented as separate read and write registers. Generally, the I²C Status and Control Register are only monitored after the I²C interrupt, as all bits are valid at that time. Polling this register at other times could read misleading bit status if a transaction is underway.

The I²C SCL clock is connected to bit 0 of GPIO port 1 or GPIO port 2, and the I²C SDA data is connected to bit 1 of GPIO port 1 or GPIO port 2. Refer to I²C and HAPI Configuration Register on page 23 for the bit definitions and functionality of the HAPI and I²C Configuration Register, which is used to set the locations of the configurable I²C pins. When the I²C compatible functionality is enabled by setting bit 0 of the I²C Status & Control Register, the two LSB ([1:0]) of the corresponding GPIO port is placed in Open Drain mode, regardless of the settings of the GPIO Configuration Register. The electrical characteristics of the I²C compatible interface is the same as that of GPIO ports 1 and 2. Note that the I_{OL} (max) is 2 mA at V_{OL} = 2.0 V for ports 1 and 2.

All control of the I²C clock and data lines is performed by the I²C compatible block.

Note
3. I²C compatible function must be separately enabled.

Downloaded from Arrow.com.

Table 26. I²C Data Register

I²C Data **ADDRESS 0x29**

Bit #	7	6	5	4	3	2	1	0
Bit Name	I²C Data 7	I²C Data 6	I²C Data 5	I²C Data 4	I²C Data 3	I²C Data 2	I²C Data 1	I²C Data 0
Read/Write	R/W	R/W	R/W	R/W	R/W	R/W	R/W	R/W
Reset	X	X	X	X	X	X	X	X

Bits [7..0]: I²C Data

Contains 8-bit data on the I²C Bus.

Table 27. I²C Status and Control Register

I²C Status and Control **ADDRESS 0x28**

Bit #	7	6	5	4	3	2	1	0
Bit Name	MSTR Mode	Continue/Busy	Xmit Mode	ACK	Addr	ARB Lost/Restart	Received Stop	I²C Enable
Read/Write	R/W	R/W	R/W	R/W	R/W	R/W	R/W	R/W
Reset	0	0	0	0	0	0	0	0

The I²C Status and Control register bits are defined in Table 28, with a more detailed description following.

Table 28. I²C Status and Control Register Bit Definitions

Bit	Name	Description
0	I²C Enable	When set to '1', the I²C compatible function is enabled. When cleared, I²C GPIO pins operate normally.
1	Received Stop	Reads 1 only in slave receive mode, when I²C Stop bit detected (unless firmware did not ACK the last transaction).
2	ARB Lost/Restart	Reads 1 to indicate master has lost arbitration. Reads 0 otherwise. Write to 1 in master mode to perform a restart sequence (also set Continue bit).
3	Addr	Reads 1 during first byte after start/restart in slave mode, or if master loses arbitration. Reads 0 otherwise. This bit should always be written as 0.
4	ACK	In receive mode, write 1 to generate ACK, 0 for no ACK. In transmit mode, reads 1 if ACK was received, 0 if no ACK received.
5	Xmit Mode	Write to 1 for transmit mode, 0 for receive mode.
6	Continue/Busy	Write 1 to indicate ready for next transaction. Reads 1 when I²C compatible block is busy with a transaction, 0 when transaction is complete.
7	MSTR Mode	Write to 1 for master mode, 0 for slave mode. This bit is cleared if master loses arbitration. Clearing from 1 to 0 generates Stop bit.

Downloaded from Arrow.com.

Bit 7: MSTR Mode

Setting this bit to 1 causes the I^2C compatible block to initiate a master mode transaction by sending a start bit and transmitting the first data byte from the data register (this typically holds the target address and R/W bit). Subsequent bytes are initiated by setting the Continue bit, as described later in this section.

Clearing this bit (set to 0) causes the GPIO pins to operate normally. In master mode, the I^2C compatible block generates the clock (SCK), and drives the data line as required depending on transmit or receive state. The I^2C compatible block performs any required arbitration and clock synchronization. IN the event of a loss of arbitration, this MSTR bit is cleared, the ARB Lost bit is set, and an interrupt is generated by the microcontroller. If the chip is the target of an external master that wins arbitration, then the interrupt is held off until the transaction from the external master is completed.

When MSTR Mode is cleared from 1 to 0 by a firmware write, an I^2C Stop bit is generated.

Bit 6: Continue/Busy

This bit is written by the firmware to indicate that the firmware is ready for the next byte transaction to begin. In other words, the bit has responded to an interrupt request and has completed the required update or read of the data register. During a read this bit indicates if the hardware is busy and is locking out additional writes to the I^2C Status and Control register. This locking allows the hardware to complete certain operations that may require an extended period of time. Following an I^2C interrupt, the I^2C compatible block does not return to the Busy state until firmware sets the Continue bit. This allows the firmware to make one control register write without the need to check the Busy bit.

Bit 5: Xmit Mode

This bit is set by firmware to enter transmit mode and perform a data transmit in master or slave mode. Clearing this bit sets the part in receive mode. Firmware generally determines the value of this bit from the R/W bit associated with the I^2C address packet. The Xmit Mode bit state is ignored when initially writing the MSTR Mode or the Restart bits, as these cases always cause transmit mode for the first byte.

Bit 4: ACK

This bit is set or cleared by firmware during receive operation to indicate if the hardware should generate an ACK signal on the I^2C compatible bus. Writing a 1 to this bit generates an ACK (SDA LOW) on the I^2C compatible bus at the ACK bit time. During transmits (Xmit Mode = 1), this bit should be cleared.

Bit 3: Addr

This bit is set by the I^2C compatible block during the first byte of a slave receive transaction, after an I^2C start or restart. The Addr bit is cleared when the firmware sets the Continue bit. This bit allows the firmware to recognize when the master has lost arbitration, and in slave mode it allows the firmware to recognize that a start or restart has occurred.

Bit 2: ARB Lost/Restart

This bit is valid as a status bit (ARB Lost) after master mode transactions. In master mode, set this bit (along with the Continue and MSTR Mode bits) to perform an I^2C restart sequence. The I^2C target address for the restart must be written to the data register before setting the Continue bit. To prevent false ARB Lost signals, the Restart bit is cleared by hardware during the restart sequence.

Bit 1: Receive Stop

This bit is set when the slave is in receive mode and detects a stop bit on the bus. The Receive Stop bit is not set if the firmware terminates the I^2C transaction by not acknowledging the previous byte transmitted on the I^2C compatible bus. For example, in receive mode if firmware sets the Continue bit and clears the ACK bit.

Bit 0: I^2C Enable

Set this bit to override GPIO definition with I^2C compatible function on the two I^2C compatible pins. When this bit is cleared, these pins are free to function as GPIOs. In I^2C compatible mode, the two pins operate in open drain mode, independent of the GPIO configuration setting.

Downloaded from Arrow.com.

Hardware Assisted Parallel Interface (HAPI)

The CY7C66x13C processor provides a hardware assisted parallel interface for bus widths of 8, 16, or 24 bits, to accommodate data transfer with an external microcontroller or similar device. Control bits for selecting the byte width are in the HAPI and I^2C Configuration Register (Table 23 on page 23), bits 1 and 0.

Signals are provided on Port 2 to control the HAPI interface. Table 29 describes these signals and the HAPI control bits in the HAPI and I^2C Configuration Register. Enabling HAPI causes the GPIO setting in the GPIO Configuration Register (Table 9 on page 17) to be overridden. The Port 2 output pins are in CMOS output mode and Port 2 input pins are in input mode (open drain mode with Q3 OFF in Figure 6 on page 16).

Table 29. Port 2 Pin and HAPI Configuration Bit Definitions

Pin	Name	Direction	Description (Port 2 Pin)
P2[2]	LatEmptyPin	Out	Ready for more input data from external interface.
P2[3]	DReadyPin	Out	Output data ready for external interface.
P2[4]	STB	In	Strobe signal for latching incoming data.
P2[5]	OE	In	Output Enable, causes chip to output data.
P2[6]	CS	In	Chip Select (Gates $\overline{STB}$ and $\overline{OE}$).
Bit	**Name**	**R/W**	**Description (HAPI and I^2C Configuration Register)**
2	Data Ready	R	Asserted after firmware writes data to Port 0, until $\overline{OE}$ driven LOW.
3	Latch Empty	R	Asserted after firmware reads data from Port 0, until $\overline{STB}$ driven LOW.
4	DRDY Polarity	R/W	Determines polarity of Data Ready bit and DReadyPin: If 0, Data Ready is active LOW, DReadyPin is active HIGH. If 1, Data Ready is active HIGH, DReadyPin is active LOW.
5	LEMPTY Polarity	R/W	Determines polarity of Latch Empty bit and LatEmptyPin: If 0, Latch Empty is active LOW, LatEmptyPin is active HIGH. If 1, Latch Empty is active HIGH, LatEmptyPin is active LOW.

HAPI Read by External Device from CY7C66x13C

In this case (see Figure 14 on page 54), firmware writes data to the GPIO ports. If 16-bit or 24-bit transfers are being made, Port 0 is written last, because writes to Port 0 asserts the Data Ready bit and the DReadyPin to signal the external device that data is available.

The external device then drives the $\overline{OE}$ and $\overline{CS}$ pins active (LOW), which causes the HAPI data to be output on the port pins. When $\overline{OE}$ is returned HIGH (inactive), the HAPI/GPIO interrupt is generated. At that point, firmware is reload the HAPI latches for the next output, again writing Port 0 last.

The Data Ready bit reads the opposite state from the external DReadyPin on pin P2[3]. If the DRDY Polarity bit is 0, DReadyPin is active HIGH, and the Data Ready bit is active LOW.

HAPI Write by External Device to CY7C66x13C

In this case (see Figure 16 on page 55), the external device drives the $\overline{STB}$ and $\overline{CS}$ pins active (LOW) when it drives new data onto the port pins. When this happens, the internal latches become full, which causes the Latch Empty bit to be deasserted. When $\overline{STB}$ is returned HIGH (inactive), the HAPI and GPIO interrupt is generated. Firmware then reads the parallel ports to empty the HAPI latches. If 16-bit or 24-bit transfers are being made, Port 0 should be read last because reads from Port 0 assert the Latch Empty bit and the LatEmptyPin to signal the external device for more data.

The Latch Empty bit reads the opposite state from the external LatEmptyPin on pin P2[2]. If the LEMPTY Polarity bit is 0, LatEmptyPin is active HIGH, and the Latch Empty bit is active LOW.

Downloaded from Arrow.com.

Processor Status and Control Register

Table 30. Processor Status and Control Register

Processor Status and Control **ADDRESS 0xFF**

Bit #	7	6	5	4	3	2	1	0
Bit Name	IRQ Pending	Watchdog Reset	USB Bus Reset Interrupt	Power On Reset	Suspend	Interrupt Enable Sense	Reserved	Run
Read/Write	R	R/W	R/W	R/W	R/W	R	R/W	R/W
Reset	0	0	0	1	0	0	0	1

Bit 0: Run

This bit is manipulated by the HALT instruction. When Halt is executed, all the bits of the Processor Status and Control Register are cleared to 0. Since the run bit is cleared, the processor stops at the end of the current instruction. The processor remains halted until an appropriate reset occurs (power on or Watchdog). This bit should normally be written as a '1.'

Bit 1: Reserved

Bit 1 is reserved and must be written as a zero.

Bit 2: Interrupt Enable Sense

This bit indicates whether interrupts are enabled or disabled. Firmware has no direct control over this bit as writing a zero or one to this bit position has no effect on interrupts. A '0' indicates that interrupts are masked off and a '1' indicates that the interrupts are enabled. This bit is further gated with the bit settings of the Global Interrupt Enable Register (Table 31 on page 28) and USB End Point Interrupt Enable Register (Table 32 on page 28). Instructions DI, EI, and RETI manipulate the state of this bit.

Bit 3: Suspend

Writing a '1' to the Suspend bit halts the processor and cause the microcontroller to enter the suspend mode that significantly reduces power consumption. A pending, enabled interrupt or USB bus activity causes the device to come out of suspend. After coming out of suspend, the device resumes firmware execution at the instruction following the IOWR which put the part into suspend. An IOWR attempting to put the part into suspend is ignored if USB bus activity is present. See Suspend Mode on page 16 for more details on suspend mode operation.

Bit 4: Power on Reset

The POR is set to '1' during a power on reset. The firmware checks bits 4 and 6 in the reset handler to determine whether a reset was caused by a power on condition or a Watchdog timeout. A POR event may be followed by a WDR before firmware begins executing, as explained here.

Bit 5: USB Bus Reset Interrupt

The USB Bus Reset Interrupt bit is set when the USB Bus Reset is detected on receiving a USB Bus Reset signal on the upstream port. The USB Bus Reset signal is a single ended zero (SE0) that lasts from 12 to 16 µs. An SE0 is defined as the condition in which both the D+ line and the D– line are LOW at the same time.

Bit 6: WDR

The WDR is set during a reset initiated by the WDT. This indicates the WDT went for more than t_{WATCH} (8 ms minimum) between Watchdog clears. This occurs with a POR event.

Bit 7: IRQ Pending

The IRQ pending, when set, indicates that one or more of the interrupts is recognized as active. An interrupt remains pending until its interrupt enable bit is set (Table 31 on page 28, Table 32 on page 28) and interrupts are globally enabled. At that point, the internal interrupt handling sequence clears this bit until another interrupt is detected as pending.

During power up, the Processor Status and Control Register is set to 00010001, which indicates a POR (bit 4 set) has occurred and no interrupts are pending (bit 7 clear). During the 96 ms suspend at start up (explained in Power on Reset on page 15), a WDR also occurs unless this suspend is aborted by an upstream SE0 before 8 ms. If a WDR occurs during the power up suspend interval, firmware reads 01010001 from the Status and Control Register after power up. Normally, the POR bit should be cleared so a subsequent WDR is clearly identified. If an upstream bus reset is received before firmware examines this register, the Bus Reset bit may also be set.

During a WDR, the Processor Status and Control Register is set to 01XX0001, which indicates a WDR (bit 6 set) has occurred and no interrupts are pending (bit 7 clear). The WDR does not effect the state of the POR and the Bus Reset Interrupt bits.

Downloaded from Arrow.com.

Interrupts

Interrupts are generated by the GPIO and DAC pins, the internal timers, I^{2}C compatible or HAPI operation, the internal USB hub, or on various USB traffic conditions. All interrupts are maskable by the Global Interrupt Enable Register and the USB End Point Interrupt Enable Register. Writing a '1' to a bit position enables the interrupt associated with that bit position.

Table 31. Global Interrupt Enable Register

Global Interrupt Enable Register **ADDRESS 0X20**

Bit #	7	6	5	4	3	2	1	0
Bit Name	Reserved	I^{2}C Interrupt Enable	GPIO Interrupt Enable	DAC Interrupt Enable	USB Hub Interrupt Enable	1.024 ms Interrupt Enable	128 µs Interrupt Enable	USB Bus RST Interrupt Enable
Read/Write	-	R/W	R/W	R/W	R/W	R/W	R/W	R/W
Reset	-	0	0	0	0	0	0	0

Bit 0: USB Bus RST Interrupt Enable

1 = Enable Interrupt on a USB Bus Reset;
0 = Disable interrupt on a USB Bus Reset
(Refer to USB Bus Reset Interrupt on page 30).

Bit 1: 128 µs Interrupt Enable

1 = Enable Timer interrupt every 128 µs;
0 = Disable Timer Interrupt for every 128 µs.

Bit 2: 1.024 ms Interrupt Enable

1= Enable Timer interrupt every 1.024 ms;
0 = Disable Timer Interrupt every 1.024 ms.

Bit 3: USB Hub Interrupt Enable

1 = Enable Interrupt on a Hub status change;
0 = Disable interrupt due to hub status change.
(Refer to USB Hub Interrupt on page 30.)

Bit 4: DAC Interrupt Enable

1 = Enable DAC Interrupt; 0 = Disable DAC interrupt.

Bit 5: GPIO Interrupt Enable

1 = Enable Interrupt on falling and rising edge on any GPIO; 0 = Disable Interrupt on falling and rising edge on any GPIO. (Refer to sections GPIO and HAPI Interrupt on page 31, GPIO Configuration Port on page 18, and GPIO Interrupt Enable Ports on page 19.)

Bit 6: I^{2}C Interrupt Enable

1 = Enable Interrupt on I2C related activity;
0 = Disable I2C related activity interrupt.
(Refer to I^{2}C Interrupt on page 32.)

Bit 7: Reserved.

Table 32. USB Endpoint Interrupt Enable Register

USB Endpoint Interrupt Enable **ADDRESS 0X21**

Bit #	7	6	5	4	3	2	1	0
Bit Name	Reserved	Reserved	Reserved	EPB1 Interrupt Enable	EPB0 Interrupt Enable	EPA2 Interrupt Enable	EPA1 Interrupt Enable	EPA0 Interrupt Enable
Read/Write	-	-	-	R/W	R/W	R/W	R/W	R/W
Reset	-	-	-	0	0	0	0	0

Bit 0: EPA0 Interrupt Enable

1 = Enable Interrupt on data activity through endpoint A0;
0 = Disable Interrupt on data activity through endpoint A0.

Bit 1: EPA1 Interrupt Enable

1 = Enable Interrupt on data activity through endpoint A1;
0 = Disable Interrupt on data activity through endpoint A1.

Bit 2: EPA2 Interrupt Enable

1 = Enable Interrupt on data activity through endpoint A2;
0 = Disable Interrupt on data activity through endpoint A2.

Bit 3: EPB0 Interrupt Enable

1 = Enable Interrupt on data activity through endpoint B0;
0 = Disable Interrupt on data activity through endpoint B0.

Bit 4: EPB1 Interrupt Enable

1 = Enable Interrupt on data activity through endpoint B1;
0 = Disable Interrupt on data activity through endpoint B1.

Bit [7..5]: Reserved

During a reset, the contents the Global Interrupt Enable Register and USB End Point Interrupt Enable Register are cleared, effectively, disabling all interrupts.

The interrupt controller contains a separate flip flop for each interrupt. See Figure 9 on page 29 for the logic block diagram of the interrupt controller. When an interrupt is generated, it is first registered as a pending interrupt. It stays pending until it is serviced or a reset occurs. A pending interrupt only generates an interrupt request if it is enabled by the corresponding bit in the interrupt enable registers. The highest priority interrupt request

Downloaded from Arrow.com.

is serviced following the completion of the currently executing instruction.

When servicing an interrupt, the hardware does the following:

1. Disables all interrupts by clearing the Global Interrupt Enable bit in the CPU (the state of this bit is read at Bit 2 of the Processor Status and Control Register, Table 30 on page 27).
2. Clears the flip flop of the current interrupt.
3. Generates an automatic CALL instruction to the ROM address associated with the interrupt being serviced (that is, the Interrupt Vector).

The instruction in the interrupt table is typically a JMP instruction to the address of the Interrupt Service Routine (ISR). The user re-enables interrupts in the interrupt service routine by executing an EI instruction. Interrupts are nested to a level limited only by the available stack space.

The Program Counter value and the Carry and Zero flags (CF, ZF) are stored onto the Program Stack by the automatic CALL instruction generated as part of the interrupt acknowledge process. The user firmware is responsible for ensuring that the processor state is preserved and restored during an interrupt.

The PUSH A instruction should typically be used as the first command in the ISR to save the accumulator value and the POP A instruction should be used to restore the accumulator value just before the RETI instruction. The program counter CF and ZF are restored and interrupts are enabled when the RETI instruction is executed.

The DI and EI instructions are used to disable and enable interrupts, respectively. These instructions affect only the Global Interrupt Enable bit of the CPU. If desired, EI is used to re-enable interrupts while inside an ISR, instead of waiting for the RETI that exists the ISR. While the global interrupt enable bit is cleared, the presence of a pending interrupt is detected by examining the IRQ Sense bit (Bit 7 in the Processor Status and Control Register).

Interrupt Vectors

The Interrupt Vectors supported by the USB Controller are listed in Table 33 on page 30. The lowest numbered interrupt (USB Bus Reset interrupt) has the highest priority, and the highest numbered interrupt (I^2C interrupt) has the lowest priority.

Figure 9. Interrupt Controller Function Diagram

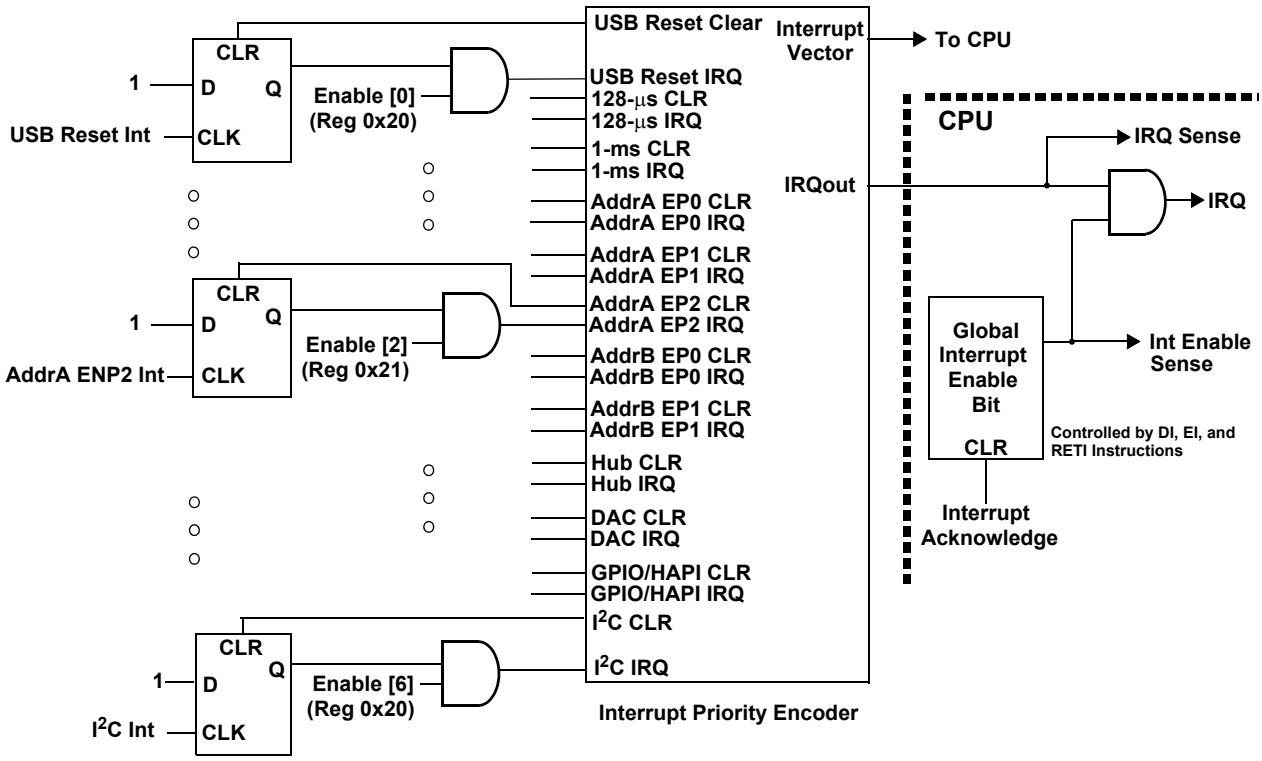

Downloaded from Arrow.com.

Although Reset is not an interrupt, the first instruction executed after a reset is at PROM address 0x0000h—which corresponds to the first entry in the Interrupt Vector Table. Because the JMP instruction is two bytes long, the interrupt vectors occupy two bytes.

Table 33. Interrupt Vector Assignments

Interrupt Vector Number	ROM Address	Function
Not Applicable	0x0000	Execution after Reset begins here
1	0x0002	USB Bus Reset interrupt
2	0x0004	128 µs timer interrupt
3	0x0006	1.024 ms timer interrupt
4	0x0008	USB Address A Endpoint 0 interrupt
5	0x000A	USB Address A Endpoint 1 interrupt
6	0x000C	USB Address A Endpoint 2 interrupt
7	0x000E	USB Address B Endpoint 0 interrupt
8	0x0010	USB Address B Endpoint 1 interrupt
9	0x0012	USB Hub interrupt
10	0x0014	DAC interrupt
11	0x0016	GPIO and HAPI interrupt
12	0x0018	I^2C interrupt

Interrupt Latency

Interrupt latency is calculated from the following equation:

Interrupt latency = (Number of clock cycles remaining in the current instruction) + (10 clock cycles for the CALL instruction) + (5 clock cycles for the JMP instruction).

For example, if a five clock cycle instruction such as JC is being executed when an interrupt occurs, the first instruction of the Interrupt Service Routine executes a minimum of 16 clocks (1+10+5) or a maximum of 20 clocks (5+10+5) after the interrupt is issued. For a 12 MHz internal clock (6 MHz crystal), 20 clock periods is 20/12 MHz = 1.667 µs.

USB Bus Reset Interrupt

The USB Controller recognizes a USB Reset when a Single Ended Zero (SE0) condition persists on the upstream USB port for 12–16 µs. SE0 is defined as the condition in which both the D+ line and the D– line are LOW. A USB Bus Reset may be recognized for an SE0 as short as 12 µs, but is always recognized for an SE0 longer than 16 µs. When a USB Bus Reset is detected, bit 5 of the Processor Status and Control Register (Table 30 on page 27) is set to record this event. In addition, the controller clears the following registers:

SIE Section: USB Device Address Registers (0x10, 0x40)

Hub Section: Hub Ports Connect Status (0x48)
Hub Ports Enable (0x49)
Hub Ports Speed (0x4A)
Hub Ports Suspend (0x4D)
Hub Ports Resume Status (0x4E)
Hub Ports SE0 Status (0x4F)
Hub Ports Data (0x50)
Hub Downstream Force (0x51).

A USB Bus Reset Interrupt is generated at the end of the USB Bus Reset condition when the SE0 state is deasserted. If the USB reset occurs during the start up delay following a POR, the delay is aborted as described in Power on Reset on page 15.

Timer Interrupt

There are two periodic timer interrupts: the 128 µs interrupt and the 1.024 ms interrupt. The user should disable both timer interrupts before going into the suspend mode to avoid possible conflicts between servicing the timer interrupts first or the suspend request first.

USB Endpoint Interrupts

There are five USB endpoint interrupts, one per endpoint. A USB endpoint interrupt is generated after the USB host writes to a USB endpoint FIFO or after the USB controller sends a packet to the USB host. The interrupt is generated on the last packet of the transaction. For example, on the host's ACK during an IN, or on the device ACK during on OUT. If no ACK is received during an IN transaction, no interrupt is generated.

USB Hub Interrupt

A USB hub interrupt is generated by the hardware after a connect/disconnect change, babble, or a resume event is detected by the USB repeater hardware. The babble and resume events are additionally gated by the corresponding bits of the Hub Port Enable Register (Table 36 on page 34). The connect and disconnect event on a port does not generate an interrupt if the SIE does not drive the port (that is, the port is being forced).

Downloaded from Arrow.com.

DAC Interrupt

Each DAC I/O pin generates an interrupt, if enabled. The interrupt polarity for each DAC I/O pin is programmable. A positive polarity is a rising edge input while a negative polarity is a falling edge input. All of the DAC pins share a single interrupt vector, which means the firmware needs to read the DAC port to determine which pin or pins caused an interrupt.

If one DAC pin has triggered an interrupt, no other DAC pins causes a DAC interrupt until that pin has returned to its inactive (non trigger) state or the corresponding interrupt enable bit is cleared. The USB Controller does not assign interrupt priority to different DAC pins and the DAC Interrupt Enable Register is not cleared during the interrupt acknowledge process.

GPIO and HAPI Interrupt

Each of the GPIO pins generates an interrupt, if enabled. The interrupt polarity is programmed for each GPIO port as part of the GPIO configuration. All of the GPIO pins share a single interrupt vector, which means the firmware needs to read the GPIO ports with enabled interrupts to determine which pin or pins caused an interrupt. A block diagram of the GPIO interrupt logic is shown in Figure 10.
Refer to GPIO Configuration Port on page 18 and GPIO Interrupt Enable Ports on page 19 for more information about setting GPIO interrupt polarity and enabling individual GPIO interrupts.

Figure 10. GPIO Interrupt Structure

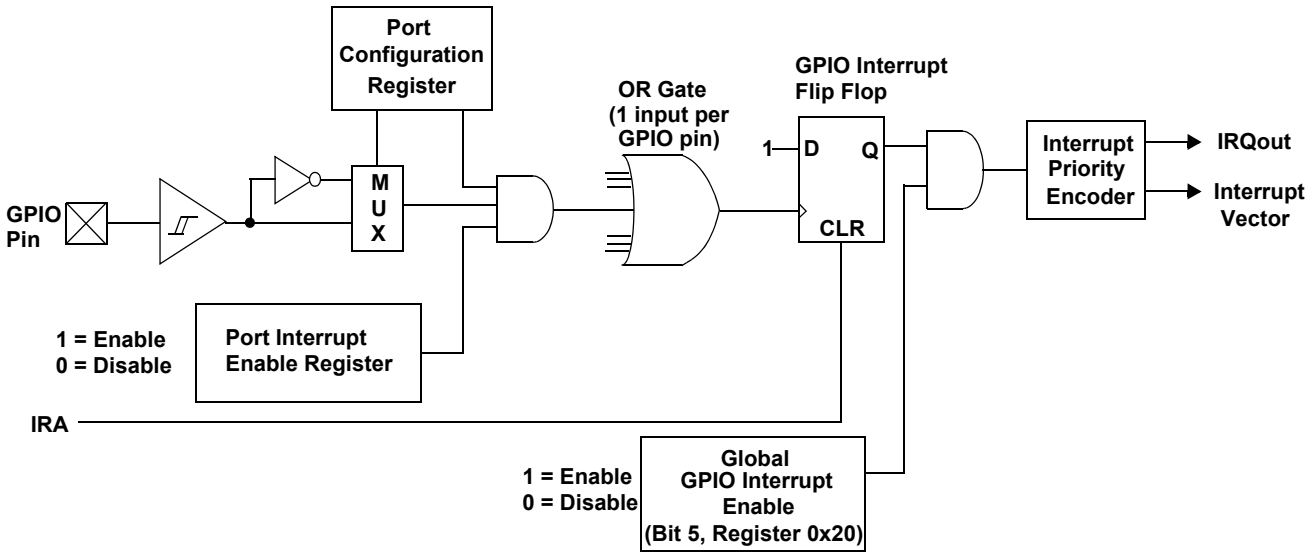

If one port pin has triggered an interrupt, no other port pins cause a GPIO interrupt until that port pin has returned to its inactive (non trigger) state or its corresponding port interrupt enable bit is cleared. The USB Controller does not assign interrupt priority to different port pins and the Port Interrupt Enable Registers are not cleared during the interrupt acknowledge process.

When HAPI is enabled, the HAPI logic takes over the interrupt vector and blocks any interrupt from the GPIO bits, including ports and bits not used by HAPI. Operation of the HAPI interrupt is independent of the GPIO specific bit interrupt enables, and is enabled or disabled only by bit 5 of the Global Interrupt Enable Register (0x20) when HAPI is enabled. The settings of the GPIO bit interrupt enables on ports and bits not used by HAPI still effect the CMOS mode operation of those ports and bits. The effect of modifying the interrupt bits while the Port Config bits are set to '10' is shown in Table 12 on page 18. The events that generate HAPI interrupts are described in Hardware Assisted Parallel Interface (HAPI) on page 26.

Downloaded from Arrow.com.

I²C Interrupt

The I²C interrupt occurs after various events on the I²C compatible bus to signal the need for firmware interaction. This generally involves reading the I²C Status and Control Register (Table 27 on page 24) to determine the cause of the interrupt, loading and reading the I²C Data Register as appropriate, and finally writing the Processor Status and Control Register (Table 30 on page 27) to initiate the subsequent transaction. The interrupt indicates that status bits are stable and it is safe to read and write the I²C registers.

When enabled, the I²C compatible state machines generate interrupts on completion of the following conditions. The referenced bits are in the I²C Status and Control Register.

- In **slave receive** mode, after the slave receives a byte of data: The *Addr* bit is set, if this is the first byte since a start or restart signal was sent by the external master. Firmware must read or write the data register as necessary, then set the *ACK, Xmit MODE,* and *Continue/Busy* bits appropriately for the next byte.
- In **slave receive** mode, after a stop bit is detected: The *Received Stop* bit is set, if the stop bit follows a slave receive transaction where the *ACK* bit was cleared to 0, no stop bit detection occurs.
- In **slave transmit** mode, after the slave transmits a byte of data: The *ACK* bit indicates if the master that requested the byte acknowledged the byte. If more bytes are to be sent, firmware writes the next byte into the Data Register and then sets the *Xmit MODE* and *Continue/Busy* bits as required.
- In **master transmit** mode, after the master sends a byte of data. Firmware should load the Data Register if necessary, and set the *Xmit MODE, MSTR MODE*, and *Continue/Busy* bits appropriately. Clearing the *MSTR MODE* bit issues a stop signal to the I²C compatible bus and return to the idle state.
- In **master receive** mode, after the master receives a byte of data: Firmware should read the data and set the *ACK* and *Continue/Busy* bits appropriately for the next byte. Clearing the *MSTR MODE* bit at the same time causes the master state machine to issue a stop signal to the I²C compatible bus and leave the I²C compatible hardware in the idle state.
- When the master loses arbitration: This condition clears the *MSTR MODE* bit and sets the *ARB Lost/Restart* bit immediately and then waits for a stop signal on the I²C compatible bus to generate the interrupt.

The *Continue/Busy* bit is cleared by hardware prior to interrupt conditions 1 to 4. When the Data Register is read or written, firmware should configure the other control bits and set the *Continue/Busy* bit for subsequent transactions. Following an interrupt from master mode, firmware should perform only one write to the Status and Control Register that sets the *Continue/Busy* bit, without checking the value of the *Continue/Busy* bit. The Busy bit may otherwise be active and I²C register contents may be changed by the hardware during the transaction, until the I²C interrupt occurs.

USB Overview

The USB hardware includes a USB Hub repeater with one upstream and four downstream ports. The USB Hub repeater interfaces to the microcontroller through a full speed Serial Interface Engine. An external series resistor of R_{ext} must be placed in series with all upstream and downstream USB outputs to meet the USB driver requirements of the USB specification. The CY7C66x13C microcontroller provides the functionality of a compound device consisting of a USB hub and permanently attached functions.

USB Serial Interface Engine

The SIE allows the CY7C66x13C microcontroller to communicate with the USB host through the USB repeater portion of the hub. The SIE simplifies the interface between the microcontroller and USB by incorporating hardware that handles the following USB bus activity independently of the microcontroller:

- Bit stuffing and unstuffing
- Checksum generation and checking
- ACK/NAK/STALL
- Token type identification
- Address checking.

Firmware is required to handle the following USB interface tasks:

- Coordinate enumeration by responding to SETUP packets
- Fill and empty the FIFOs
- Suspend and Resume coordination
- Verify and select DATA toggle values.

USB Enumeration

The internal hub and any compound device function are enumerated under firmware control. The hub is enumerated first, followed by any integrated compound function. After the hub is enumerated, the USB host reads hub connection status to determine which (if any) of the downstream ports need to be enumerated. The following is a brief summary of the typical enumeration process of the CY7C66x13C by the USB host. For a detailed description of the enumeration process, refer to the USB specification.

In this description, “Firmware” refers to embedded firmware in the CY7C66x13C controller.

1. The host computer sends a SETUP packet followed by a DATA packet to USB address 0 requesting the Device descriptor.
2. Firmware decodes the request and retrieves its Device descriptor from the program memory tables.
3. The host computer performs a control read sequence and Firmware responds by sending the Device descriptor over the USB bus, via the on-chip FIFOs.
4. After receiving the descriptor, the host sends a SETUP packet followed by a DATA packet to address 0 assigning a new USB address to the device.

Downloaded from Arrow.com.

5. Firmware stores the new address in its USB Device Address Register (for example, as Address B) after the no data control sequence completes.
6. The host sends a request for the Device descriptor using the new USB address.
7. Firmware decodes the request and retrieves the Device descriptor from program memory tables.
8. The host performs a control read sequence and Firmware responds by sending its Device descriptor over the USB bus.
9. The host generates control reads from the device to request the Configuration and Report descriptors.
10. When the device receives a Set Configuration request, its functions may now be used.
11. Following enumeration as a hub, Firmware optionally indicates to the host that a compound device exists (for example, the keyboard in a keyboard/hub device).
12. The host carries out the enumeration process with this additional function as though it were attached downstream from the hub.
13. When the host assigns an address to this device, it is stored as the other USB address (for example, Address A).

USB Hub

A USB hub is required to support:

- Connectivity behavior: service connect and disconnect detection
- Bus fault detection and recovery
- Full and low speed device support.

These features are mapped onto a hub repeater and a hub controller. The hub controller is supported by the processor integrated into the CY7C66013C and CY7C66113C microcontrollers. The hardware in the hub repeater detects whether a USB device is connected to a downstream port and the interface speed of the downstream device. The connection to a downstream port is through a differential signal pair (D+ and D–). Each downstream port provided by the hub requires external R_{UDN} resistors from each signal line to ground, so that when a downstream port has no device connected, the hub reads a LOW (zero) on both D+ and D–. This condition is used to identify the “no connect” state.

The hub must have a resistor R_{UUP} connected between its upstream D+ line and V_{REG} to indicate it is a full speed USB device.

The hub generates an EOP at EOF1, in accordance with the USB 1.1 Specification, Section 11.2.2.

Connecting and Disconnecting a USB Device

A low speed (1.5 Mbps) USB device has a pull up resistor on the D– pin. At connect time, the bias resistors set the signal levels on the D+ and D– lines. When a low speed device is connected to a hub port, the hub sees a LOW on D+ and a HIGH on D–. This causes the hub repeater to set a connect bit in the Hub Ports Connect Status register for the downstream port. Then the hub repeater generates a Hub Interrupt to notify the microcontroller that there is a change in the Hub downstream status.

A full speed (12 Mbps) USB device has a pull up resistor from the D+ pin, so the hub sees a HIGH on D+ and a LOW on D–. In this case, the hub repeater sets a connect bit in the Hub Ports Connect Status register, clears a bit in the Hub Ports Speed register (for full speed), and generates a Hub Interrupt to notify the microcontroller of the change in Hub status. The firmware sets the speed of this port in the Hub Ports Speed Register (see Table 35 on page 34).

Connects are recorded by the time a non SE0 state lasts for more than 2.5 µs on a downstream port.

When a USB device is disconnected from the Hub, the downstream signal pair eventually floats to a single ended zero state. The hub repeater recognizes a disconnect when the SE0 state on a downstream port lasts from 2.0 to 2.5 µs. On a disconnect, the corresponding bit in the Hub Ports Connect Status register is cleared, and the Hub Interrupt is generated.

Table 34. Hub Ports Connect Status

Hub Ports Connect Status **ADDRESS 0x48**

Bit #	7	6	5	4	3	2	1	0
Bit Name	Reserved	Reserved	Reserved	Reserved	Port 4 Connect Status	Port 3 Connect Status	Port 2 Connect Status	Port 1 Connect Status
Read/Write	R/W	R/W	R/W	R/W	R/W	R/W	R/W	R/W
Reset	0	0	0	0	0	0	0	0

Bit [0..3]: Port x Connect Status (where x = 1..4)

When set to 1, Port x is connected; When set to 0, Port x is disconnected.

Bit [7..4]: Reserved.

The Hub Ports Connect Status register is cleared to zero by reset or USB bus reset, then set to match the hardware configuration by the hub repeater hardware. The Reserved bits [7..4] should always read as ‘0’ to indicate no connection.

Downloaded from Arrow.com.

Table 35. Hub Ports Speed

Hub Ports Speed **ADDRESS 0x4A**

Bit #	7	6	5	4	3	2	1	0
Bit Name	Reserved	Reserved	Reserved	Reserved	Port 4 Speed	Port 3 Speed	Port 2 Speed	Port 1 Speed
Read/Write	R/W	R/W	R/W	R/W	R/W	R/W	R/W	R/W
Reset	0	0	0	0	0	0	0	0

Bit [0..3]: Port x Speed (where x = 1..4)

Set to 1 if the device plugged in to Port x is Low speed; Set to 0 if the device plugged in to Port x is Full speed.

Bit [7..4]: Reserved.

The Hub Ports Speed register is cleared to zero by reset or bus reset. This must be set by the firmware on issuing a port reset. The Reserved bits [7..4] should always read as ‘0’.

Enabling and Disabling a USB Device

After a USB device connection is detected, firmware must update status change bits in the hub status change data structure that is polled periodically by the USB host. The host responds by sending a packet that instructs the hub to reset and enable the downstream port. Firmware then sets the bit in the Hub Ports Enable register, Table 36, for the downstream port. The hub repeater hardware responds to an enable bit in the Hub Ports Enable register by enabling the downstream port, so that USB traffic flows to and from that port.

If a port is marked enabled and is not suspended, it receives all USB traffic from the upstream port, and USB traffic from the downstream port is passed to the upstream port (unless babble is detected). Low speed ports do not receive full speed traffic from the upstream port.

When firmware writes to the Hub Ports Enable register to enable a port, the port is not enabled until the end of any packet currently being transmitted. If there is no USB traffic, the port is enabled immediately.

When a USB device disconnection is detected, firmware must update status bits in the hub change status data structure that is polled periodically by the USB host. In suspend, a connect or disconnect event generates an interrupt (if the hub interrupt is enabled) even if the port is disabled.

Table 36. Hub Ports Enable Register

Hub Ports Enable Register **ADDRESS 0x49**

Bit #	7	6	5	4	3	2	1	0
Bit Name	Reserved	Reserved	Reserved	Reserved	Port 4 Enable	Port 3 Enable	Port 2 Enable	Port 1 Enable
Read/Write	R/W	R/W	R/W	R/W	R/W	R/W	R/W	R/W
Reset	0	0	0	0	0	0	0	0

Bit [0..3]: Port x Enable (where x = 1..4)

Set to 1 if Port x is enabled; Set to 0 if Port x is disabled.

Bit [7..4]: Reserved.

The Hub Ports Enable register is cleared to zero by reset or bus reset to disable all downstream ports as the default condition. A port is also disabled by internal hub hardware (enable bit cleared) if babble is detected on that downstream port. Babble is defined as:

- Any non idle downstream traffic on an enabled downstream port at EOF2
- Any downstream port with upstream connectivity established at EOF2 (that is, no EOP received by EOF2).

Downloaded from Arrow.com.

Hub Downstream Ports Status and Control

Data transfer on hub downstream ports is controlled according to the bit settings of the Hub Downstream Ports Control Register (Table 37). Each downstream port is controlled by two bits, as defined in Table 38. The Hub Downstream Ports Control Register is cleared upon reset or bus reset, and the reset state is the state for normal USB traffic. Any downstream port being forced must be marked as disabled (Table 36 on page 34) for proper operation of the hub repeater.

Firmware uses this register for driving bus reset and resume signaling to downstream ports. Controlling the port pins through this register uses standard USB edge rate control according to the speed of the port, set in the Hub Port Speed Register.

The downstream USB ports are designed for connection of USB devices, but also serves as output ports under firmware control. This allows unused USB ports to be used for functions such as driving LEDs or providing additional input signals. Pulling up these pins to voltages above V_{REF} may cause current flow into the pin.

This register is not reset by bus reset. These bits must be cleared before going into suspend.

Table 37. Hub Downstream Ports Control Register

Hub Downstream Ports Control Register **ADDRESS 0x4B**

Bit #	7	6	5	4	3	2	1	0
Bit Name	Port 4 Control Bit 1	Port 4 Control Bit 0	Port 3 Control Bit 1	Port 3 Control Bit 0	Port 2 Control Bit 1	Port 2 Control Bit 0	Port 1 Control Bit 1	Port 1 Control Bit 0
Read/Write	R/W	R/W	R/W	R/W	R/W	R/W	R/W	R/W
Reset	0	0	0	0	0	0	0	0

Table 38. Control Bit Definition for Downstream Ports

Control Bits		Control Action
Bit1	Bit 0	
0	0	Not Forcing (Normal USB Function)
0	1	Force Differential ‘1’ (D+ HIGH, D– LOW)
1	0	Force Differential ‘0’ (D+ LOW, D– HIGH)
1	1	Force SE0 state

An alternate means of forcing the downstream ports is through the Hub Ports Force Low Register (Table 39). With these registers the pins of the downstream ports are individually forced LOW, or left unforced. Unlike the Hub Downstream Ports Control Register, above, the Force Low Register does not produce standard USB edge rate control on the forced pins. However, this register allows downstream port pins to be held LOW in suspend. This register is used to drive SE0 on all downstream ports when unconfigured, as required in the USB 1.1 specification.

Table 39. Hub Ports Force Low Register

Hub Ports Force Low **ADDRESS 0x51**

Bit #	7	6	5	4	3	2	1	0
Bit Name	Force Low D+[4]	Force Low D-[4]	Force Low D+[3]	Force Low D–[3]	Force Low D+[2]	Force Low D–[2]	Force Low D+[1]	Force Low D–[1]
Read/Write	R/W	R/W	R/W	R/W	R/W	R/W	R/W	R/W
Reset	0	0	0	0	0	0	0	0

The data state of downstream ports are read through the HUB Ports SE0 Status Register (Table 40 on page 36) and the Hub Ports Data Register (Table 41 on page 36). The data read from the Hub Ports Data Register is the differential data only and is independent of the settings of the Hub Ports Speed Register (Table 35 on page 34). When the SE0 condition is sensed on a downstream port, the corresponding bits of the Hub Ports Data Register hold the last differential data state before the SE0. Hub Ports SE0 Status Register and Hub Ports Data Register are cleared upon reset or bus reset.

Downloaded from Arrow.com.

Table 40. Hub Ports SE0 Status Register

Hub Ports SE0 Status **ADDRESS 0x4F**

Bit #	7	6	5	4	3	2	1	0
Bit Name	Reserved	Reserved	Reserved	Reserved	Port 4 SE0 Status	Port 3 SE0 Status	Port 2 SE0 Status	Port 1 SE0 Status
Read/Write	-	-	-	-	R	R	R	R
Reset	0	0	0	0	0	0	0	0

Bit [0..3]: Port x SE0 Status (where x = 1..4)

Set to 1 if a SE0 is output on the Port x bus; Set to 0 if a Non-SE0 is output on the Port x bus.

Bit [7..4]: Reserved.

Table 41. Hub Ports Data Register

Hub Ports Data **ADDRESS 0x50**

Bit #	7	6	5	4	3	2	1	0
Bit Name	Reserved	Reserved	Reserved	Reserved	Port 4 Diff. Data	Port 3 Diff. Data	Port 2 Diff. Data	Port 1 Diff. Data
Read/Write	-	-	-	-	R	R	R	R
Reset	0	0	0	0	0	0	0	0

Bit [0..3]: Port x Diff Data (where x = 1..4)

Set to 1 if D+ > D– (forced differential 1, if signal is differential, i.e. not a SE0 or SE1). Set to 0 if D– > D+ (forced differential 0, if signal is differential, i.e., not a SE0 or SE1);

Bit [7..4]: Reserved.

Downstream Port Suspend and Resume

The Hub Ports Suspend Register (Table 42) and Hub Ports Resume Status Register (Table 49 on page 41) indicate the suspend and resume conditions on downstream ports. The suspend register must be set by firmware for any ports that are selectively suspended. Also, this register is only valid for ports that are selectively suspended.

If a port is marked as selectively suspended, normal USB traffic is not sent to that port. Resume traffic is also prevented from going to that port, unless the Resume comes from the selectively suspended port. If a resume condition is detected on the port, hardware reflects a Resume back to the port, sets the Resume bit in the Hub Ports Resume Register, and generates a hub interrupt. If a disconnect occurs on a port marked as selectively suspended, the suspend bit is cleared.

The Device Remote Wakeup bit (bit 7) of the Hub Ports Suspend Register controls whether or not the resume signal is propagated by the hub after a connect or a disconnect event. If the Device Remote Wakeup bit is set, the hub automatically propagates the resume signal after a connect or a disconnect event. If the Device Remote Wakeup bit is cleared, the hub does not propagate the resume signal. The setting of the Device Remote Wakeup flag has no impact on the propagation of the resume signal after a downstream remote wakeup event. The hub automatically propagates the resume signal after a remote wakeup event, regardless of the state of the Device Remote wakeup bit. The state of this bit has no impact on the generation of the hub interrupt. These registers are cleared on reset or USB bus reset.

Table 42. Hub Ports Suspend Register

Hub Ports Suspend **ADDRESS 0x4D**

Bit #	7	6	5	4	3	2	1	0
Bit Name	Device Remote Wakeup	Reserved	Reserved	Reserved	Port 4 Selective Suspend	Port 3 Selective Suspend	Port 2 Selective Suspend	Port 1 Selective Suspend
Read/Write	R/W	R/W	R/W	R/W	R/W	R/W	R/W	R/W
Reset	0	0	0	0	0	0	0	0

Bit [0..3]: Port x Selective Suspend (where x = 1..4)

Set to 1 if Port x is Selectively Suspended; Set to 0 if Port x Do not suspend.

Bit 7: Device Remote Wakeup.

When set to 1, Enable hardware upstream resume signaling for connect and disconnect events during global resume.

When set to 0, Disable hardware upstream resume signaling for connect and disconnect events during global resume.

Downloaded from Arrow.com.

Table 43. Hub Ports Resume Status Register

Hub Ports Resume **ADDRESS 0x4E**

Bit #	7	6	5	4	3	2	1	0
Bit Name	Reserved	Reserved	Reserved	Reserved	Resume 4	Resume 3	Resume 2	Resume 1
Read/Write	-	-	-	-	R	R	R	R
Reset	0	0	0	0	0	0	0	0

Bit [0..3]: Resume x (where x = 1..4)

When set to 1 Port x requesting to be resumed (set by hardware); default state is 0;

Bit [7..4]: Reserved.

The Reserved bits [7..4] should always read as ‘0’.

Resume from a selectively suspended port, with the hub not in suspend, typically involves these actions:

1. Hardware detects the Resume, drives a K to the port, and generates the hub interrupt. The corresponding bit in the Resume Status Register (0x4E) reads ‘1’ in this case.
2. Firmware responds to hub interrupt, and reads register 0x4E to determine the source of the Resume.
3. Firmware begins driving K on the port for 10 ms or more through register 0x4B.
4. Firmware clears the Selective Suspend bit for the port (0x4D), which clears the Resume bit (0x4E). This ends the hardware driven Resume, but the firmware driven Resume continues. To prevent traffic being fed by the hub repeater to the port during or just after the Resume, firmware should disable this port.
5. Firmware drives a timed SE0 on the port for two low speed bit times as appropriate.
   Note Firmware must disable interrupts during this SE0 so the SE0 pulse is not inadvertently lengthened and appears as a bus reset to the downstream device.
6. Firmware drives a J on the port for one low speed bit time, then it idles the port.
7. Firmware re-enables the port.

Resume when the hub is suspended typically involves these actions:

1. Hardware detects the Resume, drives a K on the upstream (which is then reflected to all downstream enabled ports), and generates the hub interrupt.
2. The part comes out of suspend and the clocks start.
3. When the clocks are stable, firmware execution resumes. An internal counter ensures that this takes at least 1 ms. Firmware should check for Resume from any selectively suspended ports. If found, the Selective Suspend bit for the port should be cleared; no other action is necessary.
4. The Resume ends when the host stops sending K from upstream. Firmware should check for changes to the Enable and Connect Registers. If a port has become disabled but is still connected, an SE0 is detected on the port. The port is treated as being reset, and is reported to the host as newly connected.

Firmware chooses to clear the Device Remote Wakeup bit (if set) to implement firmware timed states for port changes. All allowed port changes wake the part. Then, the part uses internal timing to determine whether to take action or return to suspend. If Device Remote Wakeup is set, automatic hardware assertions take place on Resume events.

Downloaded from Arrow.com.

USB Upstream Port Status and Control

USB status and control is regulated by the USB Status and Control Register, as shown in Table 44. All bits in the register are cleared during reset.

Table 44. USB Status and Control Register

USB Status and Control **ADDRESS 0x1F**

Bit #	7	6	5	4	3	2	1	0
Bit Name	Endpoint Size	Endpoint Mode	D+ Upstream	D– Upstream	Bus Activity	Control Action Bit 2	Control Action Bit 1	Control Action Bit 0
Read/Write	R/W	R/W	R	R	R/W	R/W	R/W	R/W
Reset	0	0	0	0	0	0	0	0

Bits[2..0]: Control Action

Set to control action as per Table 45.The three control bits allow the upstream port to be driven manually by firmware. For normal USB operation, all of these bits must be cleared. Table 45 shows how the control bits affect the upstream port.

Table 45. Control Bit Definition for Upstream Port

Control Bits	Control Action
000	Not Forcing (SIE Controls Driver)
001	Force D+[0] HIGH, D–[0] LOW
010	Force D+[0] LOW, D–[0] HIGH
011	Force SE0; D+[0] LOW, D–[0] LOW
100	Force D+[0] LOW, D–[0] LOW
101	Force D+[0] HiZ, D–[0] LOW
110	Force D+[0] LOW, D–[0] HiZ
111	Force D+[0] HiZ, D–[0] HiZ

Bit 3: Bus Activity

This is a “sticky” bit that indicates if any non idle USB event has occurred on the upstream USB port. Firmware should check and clear this bit periodically to detect any loss of bus activity. Writing a ‘0’ to the Bus Activity bit clears it, while writing a ‘1’ preserves the current value. In other words, the firmware clears the Bus Activity bit, but only the SIE can set it.

Bits 4 and 5: D– Upstream and D+ Upstream

These bits give the state of each upstream port pin individually: 1 = HIGH, 0 = LOW.

Bit 6: Endpoint Mode

This bit used to configure the number of USB endpoints. See USB Device Endpoints on page 39 for a detailed description.

Bit 7: Endpoint Size

This bit used to configure the number of USB endpoints. See USB Device Endpoints on page 39 for a detailed description.

The hub generates an EOP at EOF1 in accordance with the USB 1.1 Specification.

Downloaded from Arrow.com.

USB SIE Operation

The CY7C66x13C SIE supports operation as a single device or a compound device. This section describes the two device addresses, the configurable endpoints, and the endpoint function.

USB Device Addresses

The USB Controller provides two USB Device Address Registers: A (addressed at 0x10)and B (addressed at 0x40). Upon reset and under default conditions, Device A has three endpoints and Device B has two endpoints. The USB Device Address Register contents are cleared during a reset, setting the USB device addresses to zero and disabling these addresses. Table 46 shows the format of the USB Address Registers.

Table 46. USB Device Address Registers

USB Device Address (Device A, B) **ADDRESSES 0x10(A) and 0x40(B)**

Bit #	7	6	5	4	3	2	1	0
Bit Name	Device Address Enable	Device Address Bit 6	Device Address Bit 5	Device Address Bit 4	Device Address Bit 3	Device Address Bit 2	Device Address Bit 1	Device Address Bit 0
Read/Write	R/W	R/W	R/W	R/W	R/W	R/W	R/W	R/W
Reset	0	0	0	0	0	0	0	0

Bits[6..0]: Device Address

Firmware writes this bits during the USB enumeration process to the non zero address assigned by the USB host.

Bit 7: Device Address Enable

Must be set by firmware before the SIE responds to USB traffic to the Device Address.

USB Device Endpoints

The CY7C66x13C controller supports up to two addresses and five endpoints for communication with the host. The configuration of these endpoints, and associated FIFOs, is controlled by bits [7,6] of the USB Status and Control Register (see Table 44 on page 38). Bit 7 controls the size of the endpoints and bit 6 controls the number of addresses. These configuration options are detailed in Table 47. Endpoint FIFOs are part of user RAM (as shown in Data Memory Organization on page 13).

Table 47. Memory Allocation for Endpoints

USB Status And Control Register (0x1F) Bits [7, 6]											
[0,0]			[1,0]			[0,1]			[1,1]		
Two USB Addresses: A (3 Endpoints) & B (2 Endpoints)			Two USB Addresses: A (3 Endpoints) &B (2 Endpoints)			One USB Address: A (5 Endpoints)			One USB Address: A (5 Endpoints)		
Label	Start Address	Size	Label	Start Address	Size	Label	Start Address	Size	Label	Start Address	Size
EPB1	0xD8	8	EPB0	0xA8	8	EPA4	0xD8	8	EPA3	0xA8	8
EPB0	0xE0	8	EPB1	0xB0	8	EPA3	0xE0	8	EPA4	0xB0	8
EPA2	0xE8	8	EPA0	0xB8	8	EPA2	0xE8	8	EPA0	0xB8	8
EPA1	0xF0	8	EPA1	0xC0	32	EPA1	0xF0	8	EPA1	0xC0	32
EPA0	0xF8	8	EPA2	0xE0	32	EPA0	0xF8	8	EPA2	0xE0	32

When the SIE writes data to a FIFO, the internal data bus is driven by the SIE; not the CPU. This causes a short delay in the CPU operation. The delay is three clock cycles per byte. For example, an 8-byte data write by the SIE to the FIFO generates a delay of 2 µs (3 cycles/byte * 83.33 ns/cycle * 8 bytes).

USB Control Endpoint Mode Registers

All USB devices are required to have a control endpoint 0 (EPA0 and EPB0) that is used to initialize and control each USB address. Endpoint 0 provides access to the device configuration information and allows generic USB status and control accesses. Endpoint 0 is bidirectional to both receive and transmit data. The other endpoints are unidirectional, but selectable by the user as IN or OUT endpoints.

The endpoint mode registers are cleared during reset. When USB Status And Control Register Bits [6,7] are set to [0,0] or [1,0], the endpoint 0 EPA0 and EPB0 mode registers use the format shown in Table 48 on page 40.

Downloaded from Arrow.com.

Table 48. USB Endpoint 0 Mode Registers

USB Device Endpoint Zero Mode (A0, B0) **ADDRESSES 0x12(A0) and 0x42(B0)**

Bit #	7	6	5	4	3	2	1	0
Bit Name	Endpoint 0 SETUP Received	Endpoint 0 IN Received	Endpoint 0 OUT Received	ACK	Mode Bit 3	Mode Bit 2	Mode Bit 1	Mode Bit 0
Read/Write	R/W	R/W	R/W	R/W	R/W	R/W	R/W	R/W
Reset	0	0	0	0	0	0	0	0

Bits[3..0]: Mode

These sets the mode which control how the control endpoint responds to traffic.

Bit 4: ACK

This bit is set whenever the SIE engages in a transaction to the register's endpoint that completes with an ACK packet.

Bit 5: Endpoint 0 OUT Received

1 = Token received is an OUT token. 0 = Token received is not an OUT token. This bit is set by the SIE to report the type of token received by the corresponding device address is an OUT token. The bit must be cleared by firmware as part of the USB processing.

Bit 6: Endpoint 0 IN Received

1 = Token received is an IN token. 0 = Token received is not an IN token. This bit is set by the SIE to report the type of token received by the corresponding device address is an IN token. The bit must be cleared by firmware as part of the USB processing.

Bit 7: Endpoint 0 SETUP Received

1 = Token received is a SETUP token. 0 = Token received is not a SETUP token. This bit is set ONLY by the SIE to report the type of token received by the corresponding device address is a SETUP token. Any write to this bit by the CPU clears it (set it to 0). The bit is forced HIGH from the start of the data packet phase of the SETUP transaction until the start of the ACK packet returned by the SIE. The CPU should not clear this bit during this interval, and subsequently, until the CPU first does an IORD to this endpoint 0 mode register. The bit must be cleared by firmware as part of the USB processing.

Note In 5-endpoint mode (USB Status And Control Register Bits [7,6] are set to [0,1] or [1,1]), Register 0x42 serves as non control endpoint 3, and has the format for non control endpoints shown in Table 49 on page 41.

Bits[6:0] of the endpoint 0 mode register are locked from CPU write operations whenever the SIE has updated one of these bits, which the SIE does only at the end of the token phase of a transaction (SETUP... Data... ACK, OUT... Data... ACK, or IN... Data... ACK). The CPU unlocks these bits by doing a subsequent read of this register. Only endpoint 0 mode registers are locked when updated. The locking mechanism does not apply to the mode registers of other endpoints.

Because of these hardware locking features, firmware must perform an IORD after an IOWR to an endpoint 0 register. This verifies that the contents have changed as desired, and that the SIE has not updated these values.

While the SETUP bit is set, the CPU cannot write to the endpoint zero FIFOs. This prevents firmware from overwriting an incoming SETUP transaction before firmware has a chance to read the SETUP data. Refer to Table 47 on page 39 for the appropriate endpoint zero memory locations.

The Mode bits (bits [3:0]) control how the endpoint responds to USB bus traffic. The mode bit encoding is shown in Table 38 on page 35. Additional information on the mode bits are found in Table 52 on page 45 and Table 51 on page 44.

Note The SIE offers an "Ack out - Status in" mode and not an "Ack out - Nak in" mode. Therefore, if following the status stage of a Control Write transfer a USB host were to immediately start the next transfer, the new Setup packet could override the data payload of the data stage of the previous Control Write.

Downloaded from Arrow.com.

USB Non Control Endpoint Mode Registers

The format of the non control endpoint mode registers is shown in Table 49.

Table 49. USB Non Control Endpoint Mode Registers

USB Non Control Device Endpoint Mode **ADDRESSES 0x14, 0x16, 0x44**

Bit #	7	6	5	4	3	2	1	0
Bit Name	STALL	Reserved	Reserved	ACK	Mode Bit 3	Mode Bit 2	Mode Bit 1	Mode Bit 0
Read/Write	R/W	R/W	R/W	R/W	R/W	R/W	R/W	R/W
Reset	0	0	0	0	0	0	0	0

Bits[3..0]: Mode

These sets the mode which control how the control endpoint responds to traffic. The mode bit encoding is shown in Table 38 on page 35.

Bit 4: ACK

This bit is set whenever the SIE engages in a transaction to the register's endpoint that completes with an ACK packet.

Bits[6..5]: Reserved

Must be written zero during register writes.

Bit 7: STALL

If this STALL is set, the SIE stalls an OUT packet if the mode bits are set to ACK-IN, and the SIE stalls an IN packet if the mode bits are set to ACK-OUT. For all other modes, the STALL bit must be a LOW.

USB Endpoint Counter Registers

There are five Endpoint Counter registers, with identical formats for both control and non control endpoints. These registers contain byte count information for USB transactions, and bits for data packet status. The format of these registers is shown in Table 50.

Table 50. USB Endpoint Counter Registers

USB Endpoint Counter **ADDRESSES 0x11, 0x13, 0x15, 0x41, 0x43**

Bit #	7	6	5	4	3	2	1	0
Bit Name	Data 0/1 Toggle	Data Valid	Byte Count Bit 5	Byte Count Bit 4	Byte Count Bit 3	Byte Count Bit 2	Byte Count Bit 1	Byte Count Bit 0
Read/Write	R/W	R/W	R/W	R/W	R/W	R/W	R/W	R/W
Reset	0	0	0	0	0	0	0	0

Bits[5..0]: Byte Count

These counter bits indicate the number of data bytes in a transaction. For IN transactions, firmware loads the count with the number of bytes to be transmitted to the host from the endpoint FIFO. Valid values are 0 to 32, inclusive. For OUT or SETUP transactions, the count is updated by hardware to the number of data bytes received, plus two for the CRC bytes. Valid values are 2 to 34, inclusive.

Bit 6: Data Valid

This bit is set on receiving a proper CRC when the endpoint FIFO buffer is loaded with data during transactions. This bit is used OUT and SETUP tokens only. If the CRC is not correct, the endpoint interrupt occurs, but Data Valid is cleared to a zero.

Bit 7: Data 0/1 Toggle

This bit selects the DATA packet's toggle state: 0 for DATA0, 1 for DATA1. For IN transactions, firmware must set this bit to the desired state. For OUT or SETUP transactions, the hardware sets this bit to the state of the received Data Toggle bit.

Whenever the count updates from a SETUP or OUT transaction on endpoint 0, the counter register locks and cannot be written by the CPU. Reading the register unlocks it. This prevents firmware from overwriting a status update on incoming SETUP or OUT transactions before firmware has a chance to read the data. Only endpoint 0 counter register is locked when updated. The locking mechanism does not apply to the count registers of other endpoints.

Downloaded from Arrow.com.

Endpoint Mode and Count Registers Update and Locking Mechanism

The contents of the endpoint mode and counter registers are updated, based on the packet flow diagram in Figure 11 on page 43. Two time points, UPDATE and SETUP, are shown in the same figure. The following activities occur at each time point:

SETUP:

The SETUP bit of the endpoint 0 mode register is forced HIGH at this time. This bit is forced HIGH by the SIE until the end of the data phase of a control write transfer. The SETUP bit can not be cleared by firmware during this time.

The affected mode and counter registers of endpoint 0 are locked from any CPU writes when they are updated. These registers are unlocked by a CPU read, only if the read operation occurs after the UPDATE. The firmware needs to perform a register read as a part of the endpoint ISR processing to unlock the effected registers. The locking mechanism on mode and counter registers ensures that the firmware recognizes the changes that the SIE might have made since the previous I/O read of that register.

UPDATE:

1. Endpoint Mode Register – All the bits are updated (except the SETUP bit of the endpoint 0 mode register).
2. Counter Registers – All bits are updated.
3. Interrupt – If an interrupt is to be generated as a result of the transaction, the interrupt flag for the corresponding endpoint is set at this time. For details on what conditions are required to generate an endpoint interrupt, refer to Table 52 on page 45.
4. The contents of the updated endpoint 0 mode and counter registers are locked, except the SETUP bit of the endpoint 0 mode register which was locked earlier.

Downloaded from Arrow.com.

Figure 11. Token and Data Packet Flow Diagram

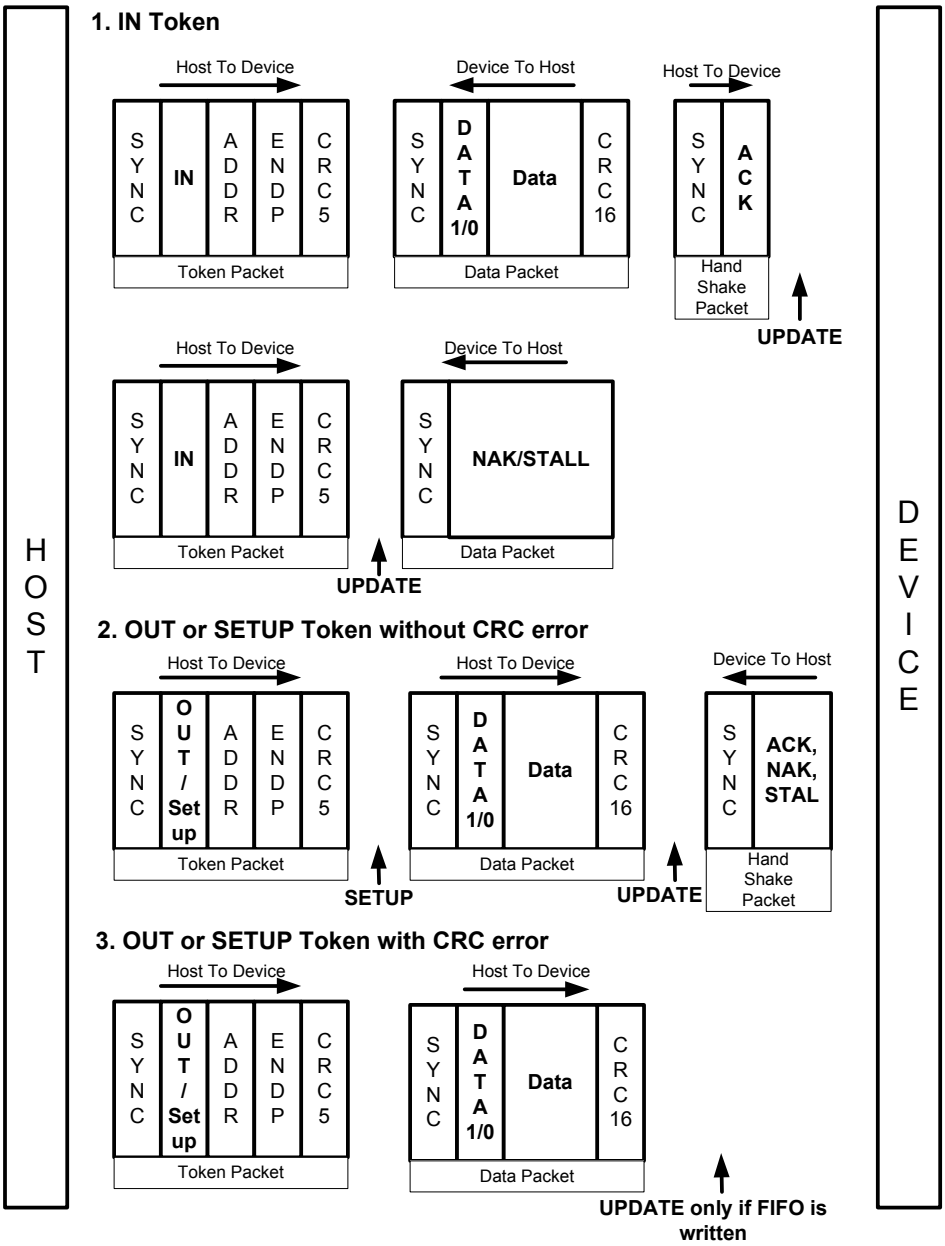

Downloaded from Arrow.com.

USB Mode Tables

Table 51. USB Register Mode Encoding

Mode	Mode Bits	SETUP	IN	OUT	Comments
Disable	0000	ignore	ignore	ignore	Ignore all USB traffic to this endpoint
Nak In/Out	0001	accept	NAK	NAK	Forced from Setup on Control endpoint, from modes other than 0000
Status Out Only	0010	accept	stall	check	For Control endpoints
Stall In/Out	0011	accept	stall	stall	For Control endpoints
Ignore In/Out	0100	accept	ignore	ignore	For Control endpoints
Isochronous Out	0101	ignore	ignore	always	For Isochronous endpoints
Status In Only	0110	accept	TX 0 Byte	stall	For Control Endpoints
Isochronous In	0111	ignore	TX count	ignore	For Isochronous endpoints
Nak Out	1000	ignore	ignore	NAK	Is set by SIE on an ACK from mode 1001 (Ack Out)
Ack Out(STALL[4]=0) Ack Out(STALL[4]=1)	1001 1001	ignore ignore	ignore ignore	ACK stall	On issuance of an ACK this mode is changed by SIE to 1000 (NAK Out)
Nak Out-Status In	1010	accept	TX 0 Byte	NAK	Is set by SIE on an ACK from mode 1011 (Ack Out-Status In)
Ack Out-Status In	1011	accept	TX 0 Byte	ACK	On issuance of an ACK this mode is changed by SIE to 1010 (NAK Out – Status In)
Nak In	1100	ignore	NAK	ignore	Is set by SIE on an ACK from mode 1101 (Ack In)
Ack IN(STALL[4]=0) Ack IN(STALL[4]=1)	1101 1101	ignore ignore	TX count stall	ignore ignore	On issuance of an ACK this mode is changed by SIE to 1100 (NAK In)
Nak In – Status Out	1110	accept	NAK	check	Is set by SIE on an ACK from mode 1111 (Ack In – Status Out)
Ack In – Status Out	1111	accept	TX Count	check	On issuance of an ACK this mode is changed by SIE to 1110 (NAK In – Status Out)

Mode

This lists the mnemonic given to the different modes that are set in the Endpoint Mode Register by writing to the lower nibble (bits 0..3). The bit settings for different modes are covered in the column marked “Mode Bits.” The Status IN and Status OUT represent the Status stage in the IN or OUT transfer involving the control endpoint.

Mode Bits

These column lists the encoding for different modes by setting Bits[3..0] of the Endpoint Mode register. This modes represents how the SIE responds to different tokens sent by the host to an endpoint. For instance, if the mode bits are set to “0001” (NAK IN/OUT), the SIE responds with an

- ACK on receiving a SETUP token from the host
- NAK on receiving an OUT token from the host
- NAK on receiving an IN token from the host

Refer to I²C Compatible Controller on page 23 for more information on SIE functioning.

SETUP, IN, and OUT

These columns shows the SIE’s response to the host on receiving a SETUP, IN, and OUT token depending on the mode set in the Endpoint Mode Register.

A “Check” on the OUT token column, implies that on receiving an OUT token the SIE checks to see whether the OUT packet is of zero length and has a Data Toggle (DTOG) set to ‘1.’ If the DTOG bit is set and the received OUT Packet has zero length, the OUT is ACKed to complete the transaction. If either of this condition is not met the SIE responds with a STALLL or just ignore the transaction.

A “TX Count” entry in the IN column implies that the SIE transmit the number of bytes specified in the Byte Count (bits 3..0 of the Endpoint Count Register) to the host in response to the IN token received.

A “TX0 Byte” entry in the IN column implies that the SIE transmit a zero length byte packet in response to the IN token received from the host.

An “Ignore” in any of the columns means that the device does not send any handshake tokens (no ACK) to the host.

An “Accept” in any of the columns means that the device responds with an ACK to a valid SETUP transaction to the host.

Note

4. STALL bit is bit 7 of the USB Non Control Device Endpoint Mode registers. For more information, refer to USB Non Control Endpoint Mode Registers on page 41.

Downloaded from Arrow.com.

Comments

Some Mode Bits are automatically changed by the SIE in response to certain USB transactions. For example, if the Mode Bits [3:0] are set to '1111' which is ACK IN-Status OUT mode as shown in Table 47 on page 39, the SIE changes the endpoint Mode Bits [3:0] to NAK IN-Status OUT mode (1110) after ACK'ing a valid status stage OUT token. The firmware needs to update the mode for the SIE to respond appropriately. See Table 38 on page 35 for more details on what modes are changed by the SIE. A disabled endpoint remains disabled until changed by firmware, and all endpoints reset to the disabled mode (0000). Firmware normally enables the endpoint mode after a SetConfiguration request.

Any SETUP packet to an enabled endpoint with mode set to accept SETUPs are changed by the SIE to 0001 (NAKing INs and OUTs). Any mode set to accept a SETUP sends an ACK handshake to a valid SETUP token.

The control endpoint has three status bits for identifying the token type received (SETUP, IN, or OUT), but the endpoint must be placed in the correct mode to function as such. Non control endpoints should not be placed into modes that accept SETUPs. Note that most modes that control transactions involving an ending ACK, are changed by the SIE to a corresponding mode which NAKs subsequent packets following the ACK. Exceptions are modes 1010 and 1110.

Table 52. Decode Table for Table 53

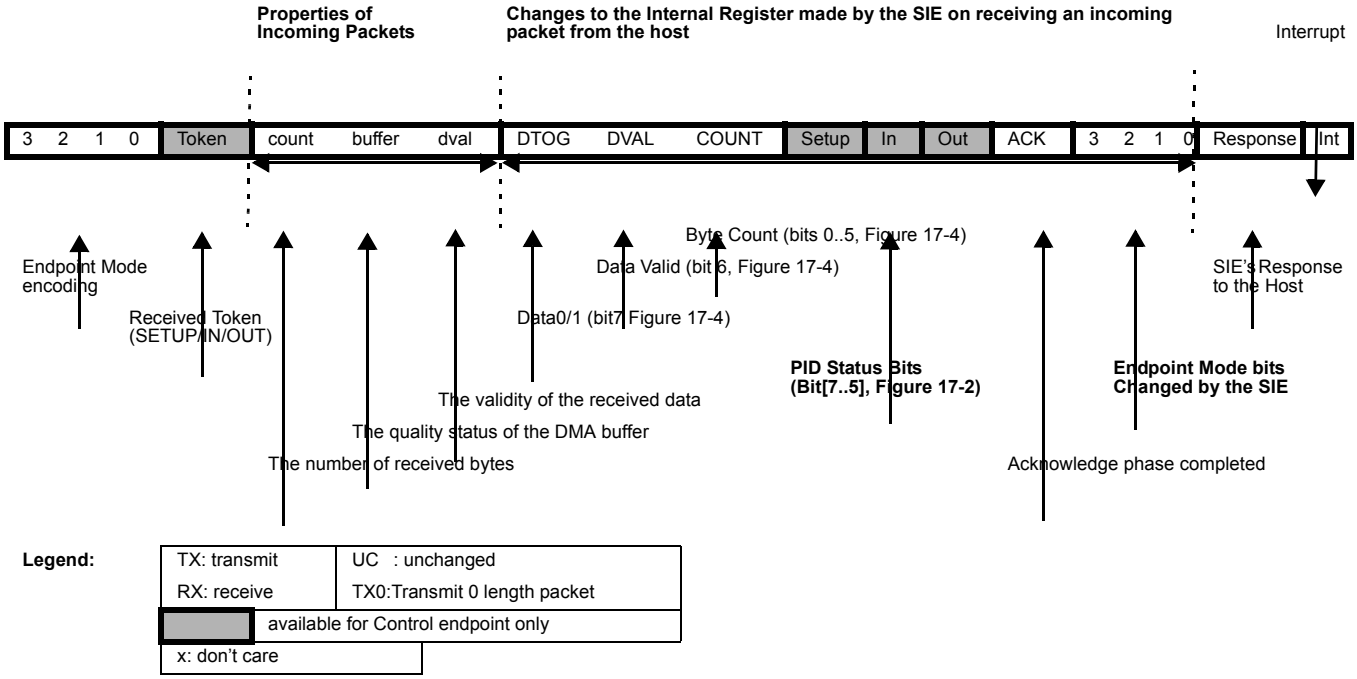

The response of the SIE are summarized as follows:

- The SIE only responds to valid transactions, and ignores invalid ones.
- The SIE generates an interrupt when a valid transaction is completed or when the FIFO is corrupted. FIFO corruption occurs during an OUT or SETUP transaction to a valid internal address, that ends with a invalid CRC.
- An incoming Data packet is valid if the count is ≤ Endpoint Size + 2 (includes CRC) and passes all error checking.
- An IN is ignored by an OUT configured endpoint and visa versa.
- The IN and OUT PID status is updated at the end of a transaction.
- The SETUP PID status is updated at the beginning of the Data packet phase.
- The entire Endpoint 0 mode register and the Count register are locked to CPU writes at the end of any transaction to that endpoint in which an ACK is transferred. These registers are only unlocked by a CPU read of the register, which should be done by the firmware only after the transaction is complete. This represents about a 1 µs window in which the CPU is locked from register writes to these USB registers. Normally the firmware should perform a register read at the beginning of the Endpoint ISRs to unlock and get the mode register information. The interlock on the Mode and Count registers ensures that the firmware recognizes the changes that the SIE might have made during the previous transaction. Note that the setup bit of the mode register is NOT locked. This means that before writing to the mode register, firmware must first read the register to make sure that the setup bit is not set (which indicates a setup was received, while processing the current USB request). This read unlocks the register. So care must be taken not to overwrite the register elsewhere.

Downloaded from Arrow.com.

Table 53. Details of Modes for Differing Traffic Conditions (see Table 52 on page 45 for the decode legend)

SETUP (if accepting SETUPs)																		
Properties of Incoming Packet								Changes made by SIE to Internal Registers and Mode Bits										
Mode Bits				token	count	buffer	dval	DTOG	DVAL	COUNT	Setup	In	Out	ACK	Mode Bits				Response	Intr
See Table 33				Setup	<= 10	data	valid	updates	1	updates	1	UC	UC	1	0	0	0	1	ACK	yes
See Table 33				Setup	> 10	junk	x	updates	updates	updates	1	UC	UC	UC	No Change				ignore	yes
See Table 33				Setup	x	junk	invalid	updates	0	updates	1	UC	UC	UC	No Change				ignore	yes
Properties of Incoming Packet								Changes made by SIE to Internal Registers and Mode Bits										
Mode Bits				token	count	buffer	dval	DTOG	DVAL	COUNT	Setup	In	Out	ACK	Mode Bits				Response	Intr
DISABLED																				
0	0	0	0	x	x	UC	x	UC	UC	UC	UC	UC	UC	UC	No Change				ignore	no
Nak In/Out																				
0	0	0	1	Out	x	UC	x	UC	UC	UC	UC	UC	1	UC	No Change				NAK	yes
0	0	0	1	In	x	UC	x	UC	UC	UC	UC	1	UC	UC	No Change				NAK	yes
Ignore In/Out																				
0	1	0	0	Out	x	UC	x	UC	UC	UC	UC	UC	UC	UC	No Change				ignore	no
0	1	0	0	In	x	UC	x	UC	UC	UC	UC	UC	UC	UC	No Change				ignore	no
Stall In/Out																				
0	0	1	1	Out	x	UC	x	UC	UC	UC	UC	UC	1	UC	No Change				Stall	yes
0	0	1	1	In	x	UC	x	UC	UC	UC	UC	1	UC	UC	No Change				Stall	yes
CONTROL WRITE																				
Properties of Incoming Packet								Changes made by SIE to Internal Registers and Mode Bits										
Mode Bits				token	count	buffer	dval	DTOG	DVAL	COUNT	Setup	In	Out	ACK	Mode Bits				Response	Intr
Normal Out/premature status In																				
1	0	1	1	Out	<= 10	data	valid	updates	1	updates	UC	UC	1	1	1	0	1	0	ACK	yes
1	0	1	1	Out	> 10	junk	x	updates	updates	updates	UC	UC	1	UC	No Change				ignore	yes
1	0	1	1	Out	x	junk	invalid	updates	0	updates	UC	UC	1	UC	No Change				ignore	yes
1	0	1	1	In	x	UC	x	UC	UC	UC	UC	1	UC	1	No Change				TX 0	yes
NAK Out/premature status In																				
1	0	1	0	Out	<= 10	UC	valid	UC	UC	UC	UC	UC	1	UC	No Change				NAK	yes
1	0	1	0	Out	> 10	UC	x	UC	UC	UC	UC	UC	UC	UC	No Change				ignore	no
1	0	1	0	Out	x	UC	invalid	UC	UC	UC	UC	UC	UC	UC	No Change				ignore	no
1	0	1	0	In	x	UC	x	UC	UC	UC	UC	1	UC	1	No Change				TX 0	yes
Status In/extra Out																				
0	1	1	0	Out	<= 10	UC	valid	UC	UC	UC	UC	UC	1	UC	0	0	1	1	Stall	yes
0	1	1	0	Out	> 10	UC	x	UC	UC	UC	UC	UC	UC	UC	No Change				ignore	no
0	1	1	0	Out	x	UC	invalid	UC	UC	UC	UC	UC	UC	UC	No Change				ignore	no
0	1	1	0	In	x	UC	x	UC	UC	UC	UC	1	UC	1	No Change				TX 0	yes
CONTROL READ																				
Properties of Incoming Packet								Changes made by SIE to Internal Registers and Mode Bits										
Mode Bits				token	count	buffer	dval	DTOG	DVAL	COUNT	Setup	In	Out	ACK	Mode Bits				Response	Intr
Normal In/premature status Out																				
1	1	1	1	Out	2	UC	valid	1	1	updates	UC	UC	1	1	No Change				ACK	yes
1	1	1	1	Out	2	UC	valid	0	1	updates	UC	UC	1	UC	0	0	1	1	Stall	yes
1	1	1	1	Out	!=2	UC	valid	updates	1	updates	UC	UC	1	UC	0	0	1	1	Stall	yes
1	1	1	1	Out	> 10	UC	x	UC	UC	UC	UC	UC	UC	UC	No Change				ignore	no
1	1	1	1	Out	x	UC	invalid	UC	UC	UC	UC	UC	UC	UC	No Change				ignore	no
1	1	1	1	In	x	UC	x	UC	UC	UC	UC	1	UC	1	1	1	1	0	ACK (back)	yes

Downloaded from Arrow.com.

Table 53. Details of Modes for Differing Traffic Conditions (see Table 52 on page 45 for the decode legend) *(continued)*

Nak In/premature status Out																				
1	1	1	0	Out	2	UC	valid	1	1	updates	UC	UC	1	1	No Change				ACK	yes
1	1	1	0	Out	2	UC	valid	0	1	updates	UC	UC	1	UC	0	0	1	1	Stall	yes
1	1	1	0	Out	!=2	UC	valid	updates	1	updates	UC	UC	1	UC	0	0	1	1	Stall	yes
1	1	1	0	Out	> 10	UC	x	UC	UC	UC	UC	UC	UC	UC	No Change				ignore	no
1	1	1	0	Out	x	UC	invalid	UC	UC	UC	UC	UC	UC	UC	No Change				ignore	no
1	1	1	0	In	x	UC	x	UC	UC	UC	UC	1	UC	UC	No Change				NAK	yes
Status Out/extra In																				
0	0	1	0	Out	2	UC	valid	1	1	updates	UC	UC	1	1	No Change				ACK	yes
0	0	1	0	Out	2	UC	valid	0	1	updates	UC	UC	1	UC	0	0	1	1	Stall	yes
0	0	1	0	Out	!=2	UC	valid	updates	1	updates	UC	UC	1	UC	0	0	1	1	Stall	yes
0	0	1	0	Out	> 10	UC	x	UC	UC	UC	UC	UC	UC	UC	No Change				ignore	no
0	0	1	0	Out	x	UC	invalid	UC	UC	UC	UC	1	UC	UC	No Change				ignore	no
0	0	1	0	In	x	UC	x	UC	UC	UC	UC	1	UC	UC	0	0	1	1	Stall	yes
OUT ENDPOINT																				
Properties of Incoming Packet								**Changes made by SIE to Internal Registers and Mode Bits**												
Mode Bits				**token**	**count**	**buffer**	**dval**	**DTOG**	**DVAL**	**COUNT**	**Setup**	**In**	**Out**	**ACK**	**Mode Bits**				**Response**	**Intr**
Normal Out/erroneous In																				
1	0	0	1	Out	<= 10	data	valid	updates	1	updates	UC	UC	1	1	1	0	0	0	ACK	yes
1	0	0	1	Out	> 10	junk	x	updates	updates	updates	UC	UC	1	UC	No Change				ignore	yes
1	0	0	1	Out	x	junk	invalid	updates	0	updates	UC	UC	1	UC	No Change				ignore	yes
1	0	0	1	In	x	UC	x	UC	UC	UC	UC	UC	UC	UC	No Change				ignore	no
																			(STALL[4] = 0)	
1	0	0	1	In	x	UC	x	UC	UC	UC	UC	UC	UC	UC	No Change				Stall	no
																			(STALL[4] = 1)	
NAK Out/erroneous In																				
1	0	0	0	Out	<= 10	UC	valid	UC	UC	UC	UC	UC	1	UC	No Change				NAK	yes
1	0	0	0	Out	> 10	UC	x	UC	UC	UC	UC	UC	UC	UC	No Change				ignore	no
1	0	0	0	Out	x	UC	invalid	UC	UC	UC	UC	UC	UC	UC	No Change				ignore	no
1	0	0	0	In	x	UC	x	UC	UC	UC	UC	UC	UC	UC	No Change				ignore	no
Isochronous endpoint (Out)																				
0	1	0	1	Out	x	updates	updates	updates	updates	updates	UC	UC	1	1	No Change				RX	yes
0	1	0	1	In	x	UC	x	UC	UC	UC	UC	UC	UC	UC	No Change				ignore	no
IN ENDPOINT																				
Properties of Incoming Packet								**Changes made by SIE to Internal Registers and Mode Bits**												
Mode Bits				**token**	**count**	**buffer**	**dval**	**DTOG**	**DVAL**	**COUNT**	**Setup**	**In**	**Out**	**ACK**	**Mode Bits**				**Response**	**Intr**
Normal In/erroneous Out																				
1	1	0	1	Out	x	UC	x	UC	UC	UC	UC	UC	UC	UC	No Change				ignore	no
																			(STALL[4] = 0)	
1	1	0	1	Out	x	UC	x	UC	UC	UC	UC	UC	UC	UC	No Change				stall	no
																			(STALL[4] = 1)	
1	1	0	1	In	x	UC	x	UC	UC	UC	UC	1	UC	1	1	1	0	0	ACK (back)	yes
NAK In/erroneous Out																				
1	1	0	0	Out	x	UC	x	UC	UC	UC	UC	UC	UC	UC	No Change				ignore	no

Downloaded from Arrow.com.

Table 53. Details of Modes for Differing Traffic Conditions (see Table 52 on page 45 for the decode legend) *(continued)*

1	1	0	0	In	x	UC	x	UC	UC	UC	UC	1	UC	UC	No Change	NAK	yes
Isochronous endpoint (In)																	
0	1	1	1	Out	x	UC	x	UC	UC	UC	UC	UC	UC	UC	No Change	ignore	no
0	1	1	1	In	x	UC	x	UC	UC	UC	UC	1	UC	UC	No Change	TX	yes

Register Summary

	Addr	Register Name	Bit 7	Bit 6	Bit 5	Bit 4	Bit 3	Bit 2	Bit 1	Bit 0	Read/Write/ Both[5, 6, 7]	Default/ Reset [8]
GPIO CONFIGURATION PORTS 0, 1, 2 AND 3	0x00	Port 0 Data	P0.7	P0.6	P0.5	P0.4	P0.3	P0.2	P0.1	P0.0	bbbbbbbb	11111111
	0x01	Port 1 Data	P1.7	P1.6	P1.5	P1.4	P1.3	P1.2	P1.1	P1.0	bbbbbbbb	11111111
	0x02	Port 2 Data	P2.7	P2.6	P2.5	P2.4	P2.3	P2.2	P2.1	P2.0	bbbbbbbb	11111111
	0x03	Port 3 Data	Reserved	P3.6 CY7C66113C only	P3.5 CY7C66113C only	P3.4	P3.3	P3.2	P3.1	P3.0	bbbbbbbb	-1111111
	0x04	Port 0 Interrupt Enable	P0.7 Intr Enable	P0.6 Intr Enable	P0.5 Intr Enable	P0.4 Intr Enable	P0.3 Intr Enable	P0.2 Intr Enable	P0.1 Intr Enable	P0.0 Intr Enable	wwwwwwww	00000000
	0x05	Port 1 Interrupt Enable	P1.7 Intr Enable	P1.6 Intr Enable	P1.5 Intr Enable	P1.4 Intr Enable	P1.3 Intr Enable	P1.2 Intr Enable	P1.1 Intr Enable	P1.0 Intr Enable	wwwwwwww	00000000
	0x06	Port 2 Interrupt Enable	P2.7 Intr Enable	P2.6 Intr Enable	P2.5 Intr Enable	P2.4 Intr Enable	P2.3 Intr Enable	P2.2 Intr Enable	P2.1 Intr Enable	P2.0 Intr Enable	wwwwwwww	00000000
	0x07	Port 3 Interrupt Enable	Reserved	P3.6 Intr Enable CY7C66113C only	P3.5 Intr Enable CY7C66113C only	P3.4 Intr Enable	P3.3 Intr Enable	P3.2 Intr Enable	P3.1 Intr Enable	P3.0 Intr Enable	wwwwwwww	00000000
	0x08	GPIO Configuration	Port 3 Config Bit 1	Port 3 Config Bit 0	Port 2 Config Bit 1	Port 2 Config Bit 0	Port 1 Config Bit 1	Port 1 Config Bit 0	Port 0 Config Bit 1	Port 0 Config Bit 0	bbbbbbbb	00000000
HAPI/I²C	0x09	HAPI/I²C Configuration	I²C Position	Reserved	LEMPTY Polarity	DRDY Polarity	Latch Empty	Data Ready	Port Width bit 1	Port Width bit 0	b-bbrrbb	00000000
Endpoint A0, AI and A2 Configuration	0x10	USB Device Address A	Device Address A Enable	Device Address A Bit 6	Device Address A Bit 5	Device Address A Bit 4	Device Address A Bit 3	Device Address A Bit 2	Device Address A Bit 1	Device Address A Bit 0	bbbbbbbb	00000000
Endpoint A0, AI AND A2 Configuration	0x11	EP A0 Counter Register	Data 0/1 Toggle	Data Valid	Byte Count Bit 5	Byte Count Bit 4	Byte Count Bit 3	Byte Count Bit 2	Byte Count Bit 1	Byte Count Bit 0	bbbbbbbb	00000000
	0x12	EP A0 Mode Register	Endpoint0 SETUP Received	Endpoint0 IN Received	Endpoint0 OUT Received	ACK	Mode Bit 3	Mode Bit 2	Mode Bit 1	Mode Bit 0	bbbbbbbb	00000000
	0x13	EP A1 Counter Register	Data 0/1 Toggle	Data Valid	Byte Count Bit 5	Byte Count Bit 4	Byte Count Bit 3	Byte Count Bit 2	Byte Count Bit 1	Byte Count Bit 0	bbbbbbbb	00000000
	0x14	EP A1 Mode Register	STALL	-	-	ACK	Mode Bit 3	Mode Bit 2	Mode Bit 1	Mode Bit 0	bbbbbbbb	00000000
	0x15	EP A2 Counter Register	Data 0/1 Toggle	Data Valid	Byte Count Bit 5	Byte Count Bit 4	Byte Count Bit 3	Byte Count Bit 2	Byte Count Bit 1	Byte Count Bit 0	bbbbbbbb	00000000
	0x16	EP A2 Mode Register	STALL	-	-	ACK	Mode Bit 3	Mode Bit 2	Mode Bit 1	Mode Bit 0	bbbbbbbb	00000000
USB-CS	0x1F	USB Status and Control	Endpoint Size	Endpoint Mode	D+ Upstream	D– Upstream	Bus Activity	Control Bit 2	Control Bit 1	Control Bit 0	bbrrbbbb	-0xx0000

Notes
5. B: Read and Write.
6. W: Write.
7. R: Read.
8. X: Unknown

Downloaded from Arrow.com.

Register Summary *(continued)*

	Addr	Register Name	Bit 7	Bit 6	Bit 5	Bit 4	Bit 3	Bit 2	Bit 1	Bit 0	Read/Write/Both[5, 6, 7]	Default/Reset [8]
INTERRUPT	0x20	Global Interrupt Enable	Reserved	I²C Interrupt Enable	GPIO Interrupt Enable	DAC Interrupt Enable	USB Hub Interrupt Enable	1.024-ms Interrupt Enable	128 µs Interrupt Enable	USB Bus RESET Interrupt Enable	-bbbbbbb	-0000000
	0x21	Endpoint Interrupt Enable	Reserved	Reserved	Reserved	EPB1 Interrupt Enable	EPB0 Interrupt Enable	EPA2 Interrupt Enable	EPA1 Interrupt Enable	EPA0 Interrupt Enable	---bbbbb	---00000
TIMER	0x24	Timer (LSB)	Timer Bit 7	Timer Bit 6	Timer Bit 5	Timer Bit 4	Timer Bit 3	Timer Bit 2	Timer Bit 1	Timer Bit 0	rrrrrrrr	00000000
	0x25	Timer (MSB)	Reserved	Reserved	Reserved	Reserved	Timer Bit 11	Timer Bit 10	Time Bit 9	Timer Bit 8	----rrrr	----0000
I²C	0x28	I²C Control and Status	MSTR Mode	Continue/ Busy	Xmit Mode	ACK	Addr	ARB Lost/ Restart	Received Stop	I²C Enable	bbbbbbbb	00000000
	0x29	I²C Data	I²C Data 7	I²C Data 6	I²C Data 5	I²C Data 4	I²C Data 3	I²C Data 2	I²C Data 1	I²C Data 0	bbbbbbbb	xxxxxxxx
ENDPOINT B0, B1 CONFIGURATION	0x40	USB Device Address B	Device Address B Enable	Device Address B Bit 6	Device Address B Bit 5	Device Address B Bit 4	Device Address B Bit 3	Device Address B Bit 2	Device Address B Bit 1	Device Address B Bit 0	bbbbbbbb	00000000
	0x41	EP B0 Counter Register	Data 0/1 Toggle	Data Valid	Byte Count Bit 5	Byte Count Bit 4	Byte Count Bit 3	Byte Count Bit 2	Byte Count Bit 1	Byte Count Bit 0	bbbbbbbb	00000000
	0x42	EP B0 Mode Register	Endpoint 0 SETUP Received	Endpoint 0 IN Received	Endpoint 0 OUT Received	ACK	Mode Bit 3	Mode Bit 2	Mode Bit 1	Mode Bit 0	bbbbbbbb	00000000
	0x43	EP B1 Counter Register	Data 0/1 Toggle	Data Valid	Byte Count Bit 5	Byte Count Bit 4	Byte Count Bit 3	Byte Count Bit 2	Byte Count Bit 1	Byte Count Bit 0	bbbbbbbb	00000000
	0x44	EP B1 Mode Register	STALL	-	-	ACK	Mode Bit 3	Mode Bit 2	Mode Bit 1	Mode Bit 0	b--bbbbb	00000000
HUB PORT CONTROL, STATUS, SUSPEND RESUME, SE0, FORCE LOW	0x48	Hub Port Connect Status	Reserved	Reserved	Reserved	Reserved	Port 4 Connect Status	Port 3 Connect Status	Port 2 Connect Status	Port 1 Connect Status	----bbbb	00000000
	0x49	Hub Port Enable	Reserved	Reserved	Reserved	Reserved	Port 4 Enable	Port 3 Enable	Port 2 Enable	Port 1 Enable	----bbbb	00000000
	0x4A	Hub Port Speed	Reserved	Reserved	Reserved	Reserved	Port 4 Speed	Port 3 Speed	Port 2 Speed	Port 1 Speed	----bbbb	00000000
	0x4B	Hub Port Control (Ports 4:1)	Port 4 Control Bit 1	Port 4 Control Bit 0	Port 3 Control Bit 1	Port 3 Control Bit 0	Port 2 Control Bit 1	Port 2 Control Bit 0	Port 1 Control Bit 1	Port 1 Control Bit 0	bbbbbbbb	00000000
	0x4D	Hub Port Suspend	Device Remote Wakeup	Reserved	Reserved	Reserved	Port 4 Selective Suspend	Port 3 Selective Suspend	Port 2 Selective Suspend	Port 1 Selective Suspend	b---bbbb	00000000
	0x4E	Hub Port Resume Status	Reserved	Reserved	Reserved	Reserved	Resume 4	Resume 3	Resume 2	Resume 1	----rrrr	00000000
	0x4F	Hub Port SE0 Status	Reserved	Reserved	Reserved	Reserved	Port 4 SE0 Status	Port 3 SE0 Status	Port 2 SE0 Status	Port 1 SE0 Status	----rrrr	00000000
	0x50	Hub Ports Data	Reserved	Reserved	Reserved	Reserved	Port 4 Diff. Data	Port 3 Diff. Data	Port 2 Diff. Data	Port 1 Diff. Data	----rrrr	00000000
	0x51	Hub Port Force Low (Ports 4:1)	Force Low D+[4]	Force Low D–[4]	Force Low D+[3]	Force Low D–[3]	Force Low D+[2]	Force Low D–[2]	Force Low D+[1]	Force Low D–[1]	bbbbbbbb	00000000
	0xFF	Process Status & Control	IRQ Pending	WDR	USB Bus Reset Interrupt	Power-on Reset	Suspend	Interrupt Enable Sense	Reserved	Run	rbbbbrbb	00010001

Downloaded from Arrow.com.

Sample Schematic

Figure 12. Sample Schematic

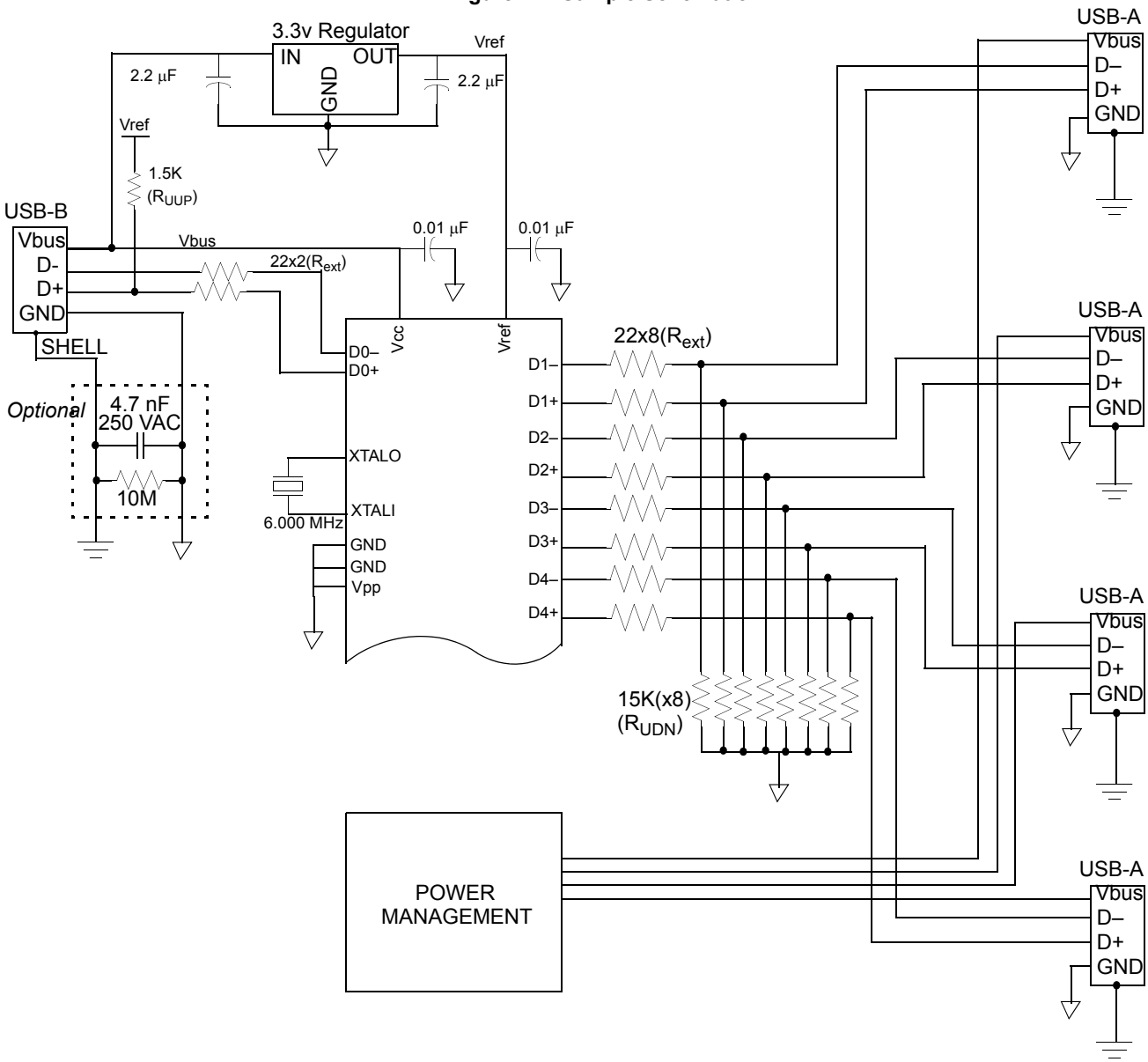

Downloaded from Arrow.com.

Absolute Maximum Ratings

Exceeding maximum ratings may impair the useful life of the device. These user guidelines are not tested.

Storage Temperature ..... –65 °C to +150 °C

Ambient Temperature with Power Applied..... 0 °C to +70 °C

Supply Voltage on V_{CC} relative to V_{SS} .....–0.5 V to +7.0 V

DC Input Voltage ..... –0.5 V to +V_{CC} + 0.5 V

DC Voltage Applied to Outputs in High Z State ..... –0.5 V to +V_{CC} + 0.5 V

Power Dissipation..... 500 mW

Static Discharge Voltage ..... > 2000 V

Latch Up Current ..... > 200 mA

Max Output Sink Current into Port 0, 1, 2, 3, and DAC[1:0] Pins ..... 60 mA

Max Output Sink Current into DAC[7:2] Pins..... 10 mA

Max Output Source Current from Port 1, 2, 3, 4 ..... 30 mA

Electrical Characteristics

(Fosc = 6 MHz; Operating Temperature = 0 to 70 °C, V_{CC} = 4.0 V to 5.25 V)

Parameter	Description	Conditions	Min	Max	Unit
General					
V_{REF}	Reference Voltage	3.3 V ± 5%	3.15	3.45	V
V_{pp}	Programming Voltage (disabled)		–0.4	0.4	V
I_{CC}	V_{CC} Operating Current	No GPIO source current	–	50	mA
I_{SB1}	Supply Current—Suspend Mode		–	50	µA
I_{ref}	Vref Operating Current	No USB Traffic[9]	–	10	mA
I_{il}	Input Leakage Current	Any pin	–	1	µA
USB Interface					
V_{di}	Differential Input Sensitivity	| (D+)–(D–) |	0.2	–	V
V_{cm}	Differential Input Common Mode Range		0.8	2.5	V
V_{se}	Single Ended Receiver Threshold		0.8	2.0	V
C_{in}	Transceiver Capacitance		–	20	pF
I_{lo}	Hi-Z State Data Line Leakage	0 V < V_{in} < 3.3 V	–10	10	µA
R_{ext}	External USB Series Resistor	In series with each USB pin	19	21	Ω
R_{UUP}	External Upstream USB pull up Resistor	1.5 kΩ ± 5%, D+ to V_{REG}	1.425	1.575	kΩ
R_{UDN}	External Downstream Pull down Resistors	15 kΩ ± 5%, downstream USB pins	14.25	15.75	kΩ
Power-on Reset					
t_{vccs}	V_{CC} Ramp Rate	Linear ramp 0 V to V_{CC}[10]	0	100	ms
USB Upstream/Downstream Port					
V_{UOH}	Static Output High	15 kΩ ± 5% to Gnd	2.8	3.6	V
V_{UOL}	Static Output Low	1.5 kΩ ± 5% to V_{REF}	–	0.3	V
Z_O	USB Driver Output Impedance	Including R_{ext} Resistor	28	44	Ω

Notes

9. Add 18 mA per driven USB cable (upstream or downstream). This is based on transitions every two full speed bit times on average.
10. Power on Reset occurs whenever the voltage on V_{CC} is below approximately 2.5 V.

Downloaded from Arrow.com.

Electrical Characteristics *(continued)*

(Fosc = 6 MHz; Operating Temperature = 0 to 70 °C, V_{CC} = 4.0 V to 5.25 V)

Parameter	Description	Conditions	Min	Max	Unit
General Purpose I/O (GPIO)					
R_{up}	pull up Resistance (typical 14 kΩ)		8.0	24.0	kΩ
V_{ITH}	Input Threshold Voltage	All ports, LOW to HIGH edge	20%	40%	V_{CC}
V_H	Input Hysteresis Voltage	All ports, HIGH to LOW edge	2%	8%	V_{CC}
V_{OL}	Port 0,1,2,3 Output Low Voltage	I_{OL} = 3 mA	–	0.4	V
		I_{OL} = 8 mA	–	2.0	V
V_{OH}	Output High Voltage	I_{OH} = 1.9 mA (all ports 0,1,2,3)	2.4	–	V
DAC Interface					
R_{up}	DAC Pull Up Resistance (typical 14 kΩ)		8.0	24.0	kΩ
$I_{sink0(0)}$	DAC[7:2] Sink Current (0)	V_{out} = 2.0 V DC	0.1	0.3	mA
$I_{sink0(F)}$	DAC[7:2] Sink Current (F)	V_{out} = 2.0 V DC	0.5	1.5	mA
$I_{sink1(0)}$	DAC[1:0] Sink Current (0)	V_{out} = 2.0 V DC	1.6	4.8	mA
$I_{sink1(F)}$	DAC[1:0] Sink Current (F)	V_{out} = 2.0 V DC	8	24	mA
I_{range}	Programmed Isink Ratio: max/min	V_{out} = 2.0 V DC[11]	4	6	
T_{ratio}	Tracking Ratio DAC[1:0] to DAC[7:2]	V_{out} = 2.0 V[12]	14	22	
$I_{sinkDAC}$	DAC Sink Current	V_{out} = 2.0 V DC	1.6	4.8	mA
I_{lin}	Differential Nonlinearity	DAC Port[13]		0.6	LSB

Notes

11. Irange: $I_{sinkn}(15)/I_{sinkn}(0)$ for the same pin.
12. $T_{ratio} = I_{sink1}[1:0](n)/I_{sink}0[7:2](n)$ for the same n, programmed.
13. I_{lin} measured as largest step size vs. nominal according to measured full scale and zero programmed values.

Downloaded from Arrow.com.

Switching Characteristics

(F_{OSC} = 6.0 MHz)

Parameter	Description	Min	Max	Unit
Clock Source				
f_{OSC}	Clock Rate	6 ± 0.25%	–	MHz
t_{cyc}	Clock Period	166.25	167.08	ns
t_{CH}	Clock HIGH time	0.45 t_{CYC}	–	ns
t_{CL}	Clock LOW time	0.45 t_{CYC}	–	ns
USB Full Speed Signaling[15]				
t_{rfs}	Transition Rise Time	4	20	ns
t_{ffs}	Transition Fall Time	4	20	ns
t_{rfmfs}	Rise/Fall Time Matching; (t_r/t_f)	90	111	%
$t_{dratefs}$	Full Speed Date Rate	12 ± 0.25%	–	Mb/s
DAC Interface				
t_{sink}	Current Sink Response Time	–	0.8	µs
HAPI Read Cycle Timing				
t_{RD}	Read Pulse Width	15	–	ns
t_{OED}	OE LOW to Data Valid[16, 17]	–	40	ns
t_{OEZ}	OE HIGH to Data High Z[17]	–	20	ns
t_{OEDR}	OE LOW to Data_Ready Deasserted[16, 17]	0	60	ns
HAPI Write Cycle Timing				
t_{WR}	Write Strobe Width	15	–	ns
t_{DSTB}	Data Valid to STB HIGH (Data Setup Time)[17]	5	–	ns
t_{STBZ}	STB HIGH to Data High Z (Data Hold Time)[17]	15	–	ns
t_{STBLE}	STB LOW to Latch_Empty Deasserted[16, 17]	0	50	ns
Timer Signals				
t_{watch}	WDT Period	8.192	14.336	ms

Notes
14.
15. Per Table 7-6 of revision 1.1 of USB specification.
16. For 25 pF load.
17. Assumes chip select $\overline{CS}$ is asserted (LOW).

Downloaded from Arrow.com.

Figure 13. Clock Timing

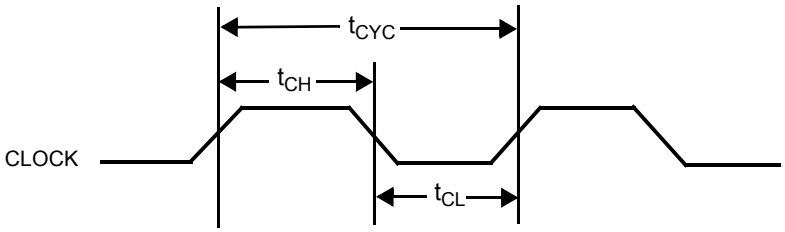

Figure 14. USB Data Signal Timing

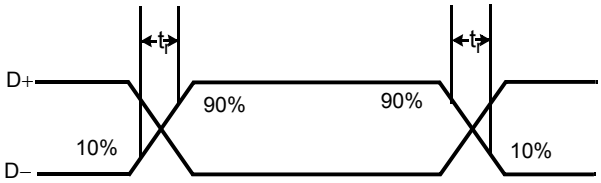

Figure 15. HAPI Read by External Interface from USB Microcontroller

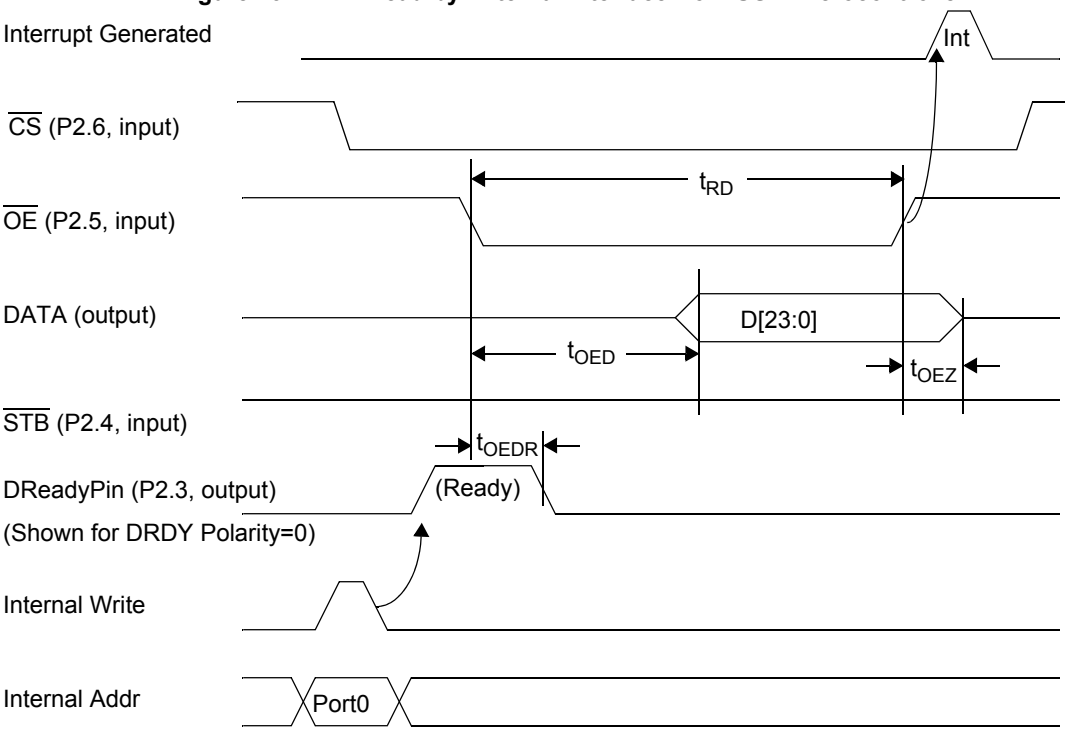

Downloaded from Arrow.com.

Figure 16. HAPI Write by External Device to USB Microcontroller

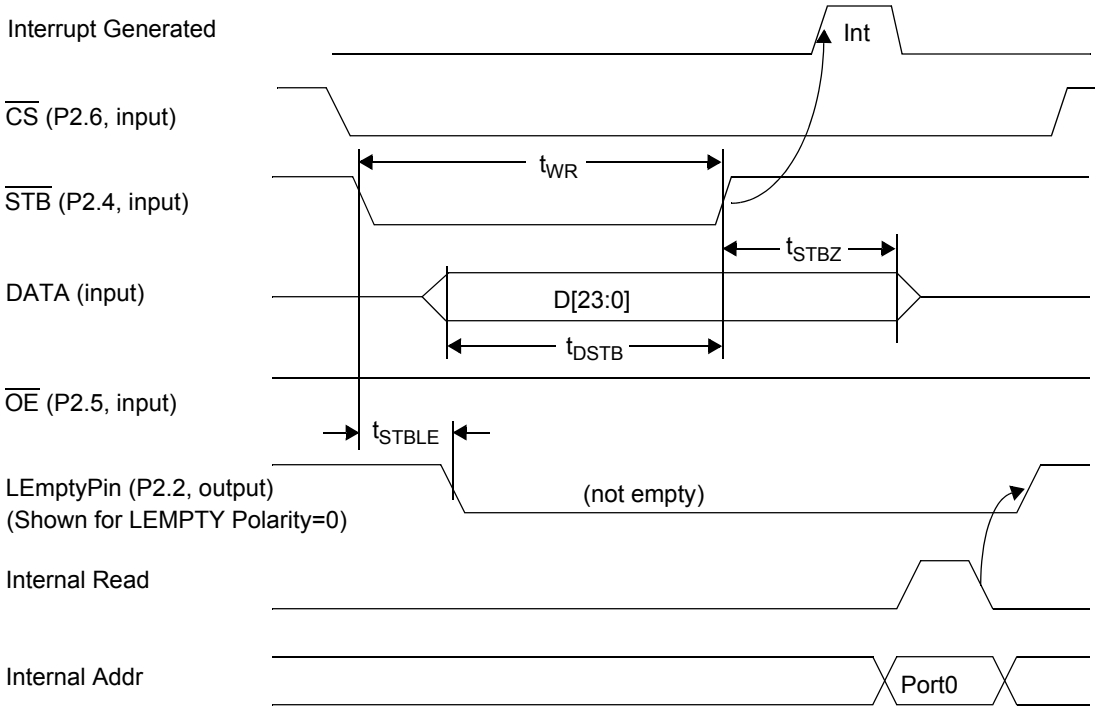

Ordering Information

Ordering Code	PROM Size	Package Type	Operating Range
CY7C66013C-PVXC	8 KB	48-pin SSOP (300 Mils)	Commercial
CY7C66113C-PVXC	8 KB	56-pin SSOP (300 Mils)	Commercial
CY7C66113C-PVXCT	8 KB	56-pin SSOP (300 Mils)	Commercial
CY7C66113C-XC	8 KB	Die	Commercial
CY7C66113C-LTXC	8 KB	56-pin QFN	Commercial
CY7C66113C-LTXCT	8 KB	56-pin QFN	Commercial

Ordering Code Definitions

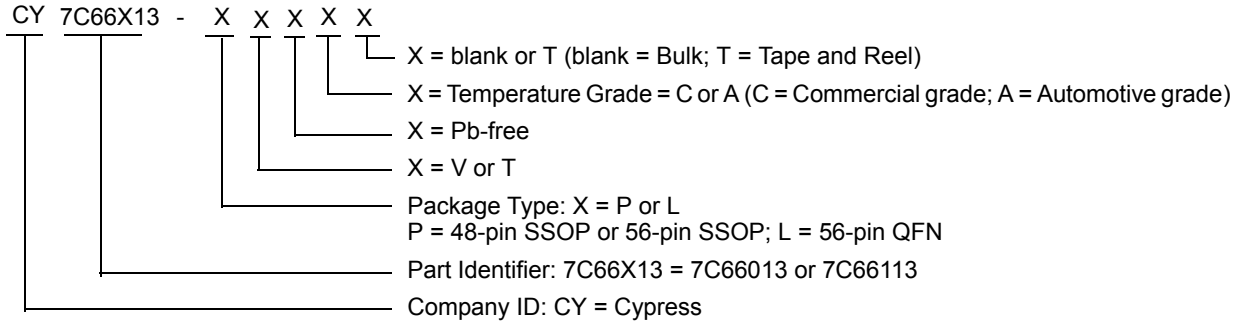

Downloaded from Arrow.com.

Package Diagrams

Figure 17. 48-pin SSOP (300 Mils) Package Outline

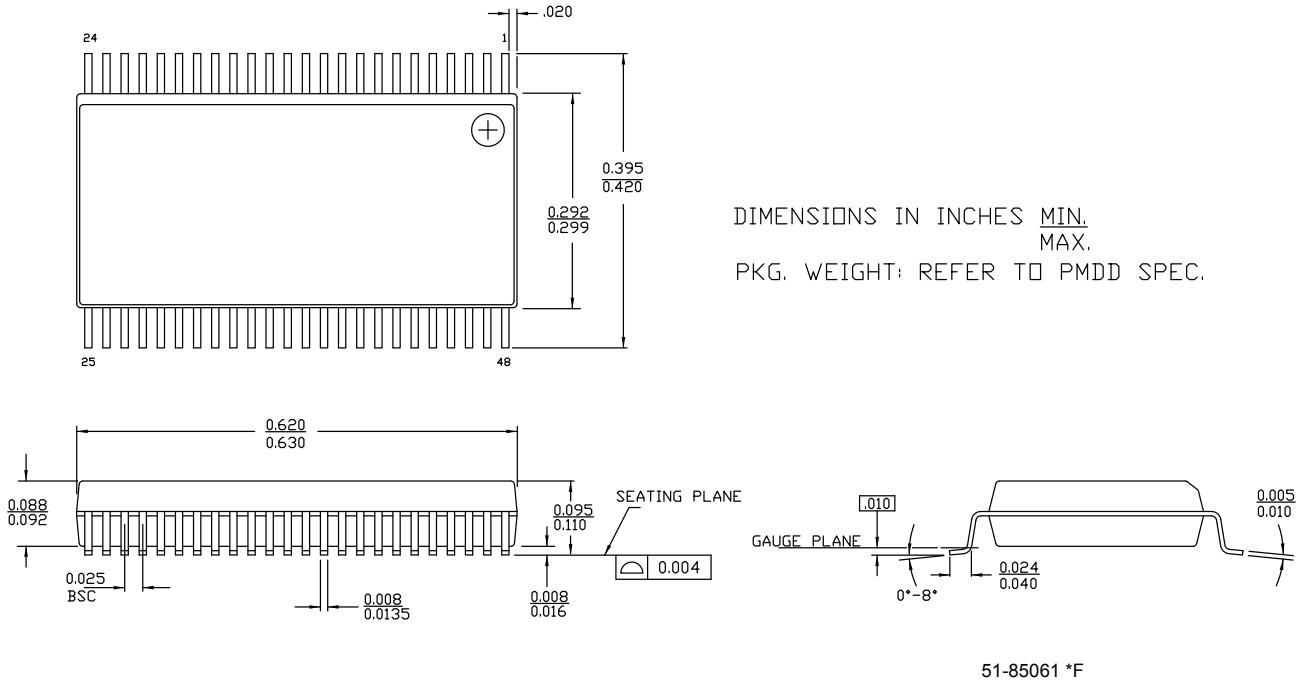

Figure 18. 56-pin SSOP (300 Mils) Package Outline

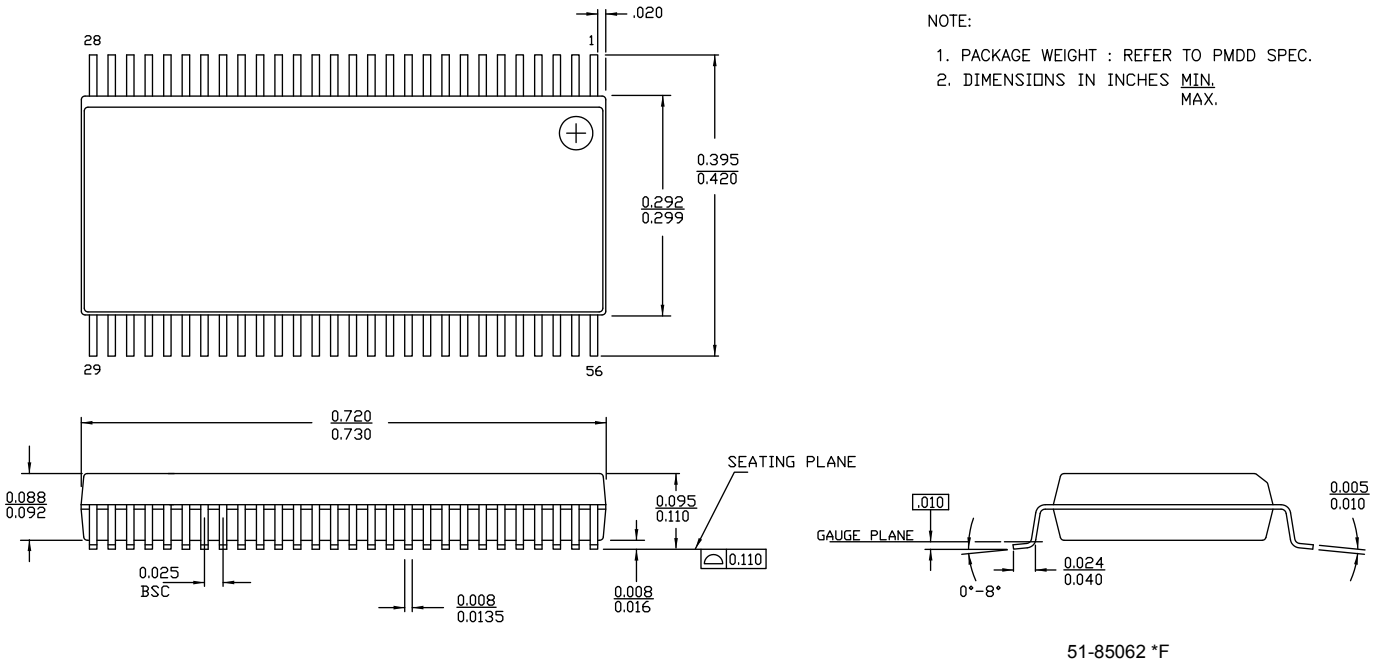

Downloaded from Arrow.com.

Figure 19. 56-pin QFN (8 × 8 × 1.0 mm) 4.5 × 5.2 mm E-Pad (Sawn) Package Outline

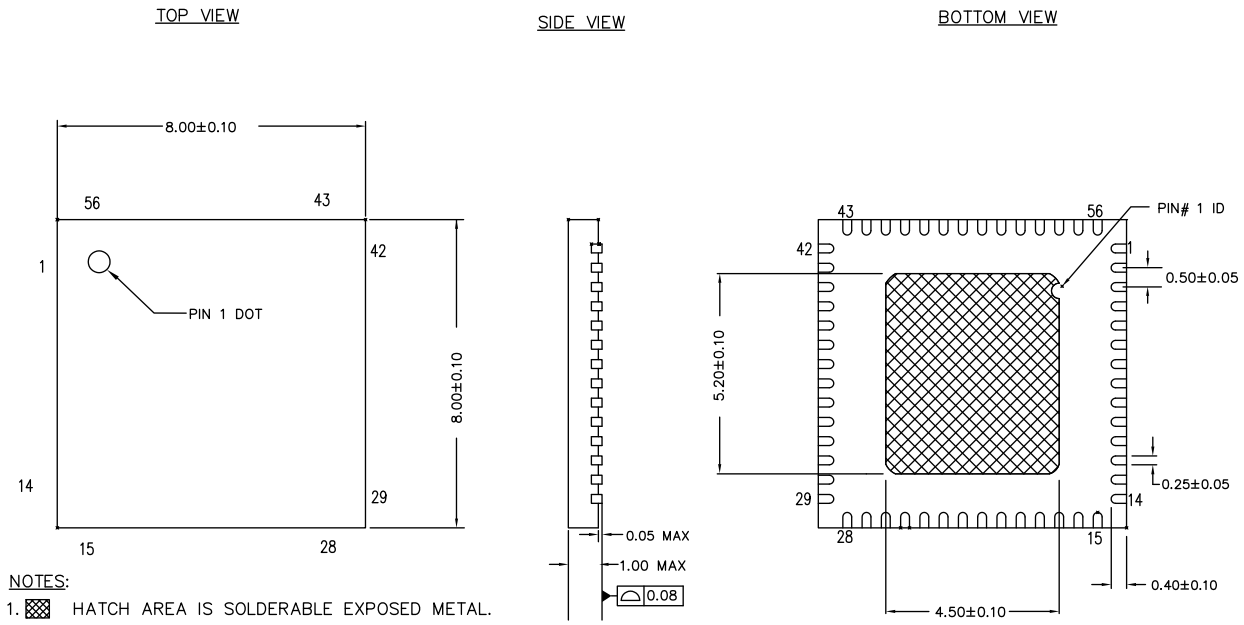

NOTES:
1. HATCH AREA IS SOLDERABLE EXPOSED METAL.
2. REFERENCE JEDEC#: MO–220
3. PACKAGE WEIGHT: 162 ± 16 mg
4. ALL DIMENSIONS ARE IN MILLIMETERS

Downloaded from Arrow.com.

Quad Flat Package No Leads (QFN) Package Design Notes

Electrical contact of the part to the Printed Circuit Board (PCB) is made by soldering the leads on the bottom surface of the package to the PCB. Hence, special attention is required to the heat transfer area below the package to provide a good thermal bond to the circuit board. A Copper (Cu) fill is to be designed into the PCB as a thermal pad under the package. Heat is transferred from the FX1 through the device's metal paddle on the bottom side of the package. Heat from here, is conducted to the PCB at the thermal pad. It is then conducted from the thermal pad to the PCB inner ground plane by a 5 x 5 array of via. A via is a plated through hole in the PCB with a finished diameter of 13 mil. The QFN's metal die paddle must be soldered to the PCB's thermal pad. Solder mask is placed on the board top side over each via to resist solder flow into the via. The mask on the top side also minimizes outgassing during the solder reflow process.

For further information on this package design please refer to the application note *Surface Mount Assembly of AMKOR's MicroLeadFrame (MLF) Technology*. This application note can be downloaded from AMKOR's website from the following URL http://www.amkor.com/products/notes_papers/MLF_AppNote_0902.pdf. The application note provides detailed information on board mounting guidelines, soldering flow, rework process, etc.

Figure 20 displays a cross sectional area underneath the package. The cross section is of only one via. The thickness of the solder paste template should be 5 mil. It is recommended that "No Clean" type 3 solder paste is used for mounting the part. Nitrogen purge is recommended during reflow.

Figure 21 is a plot of the solder mask pattern. This pad is thermally connected and is not electrically connected inside the chip. To minimize EMI, this pad should be connected to the ground plane of the circuit board.

Figure 20. Cross Section of the Area Underneath the QFN Package

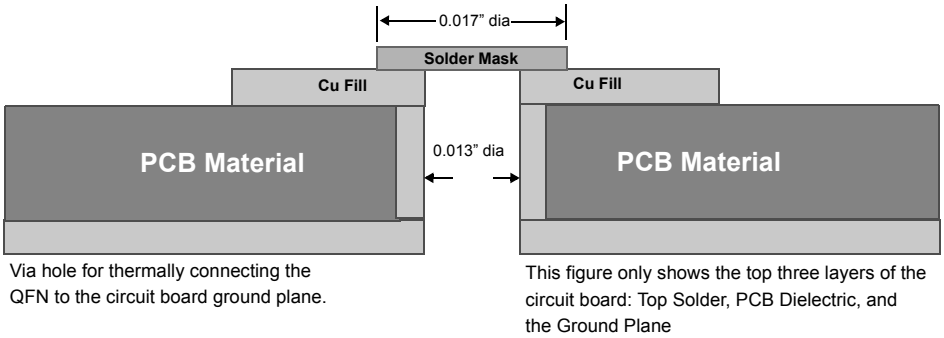

Figure 21. Plot of the Solder Mask (White Area)

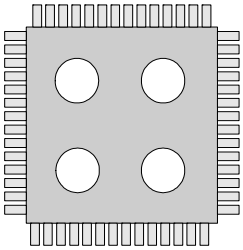

Downloaded from Arrow.com.

Acronyms

The following table lists the acronyms that are used in this document.

Acronym	Description
CPU	central processing unit
EMI	electromagnetic interference
FIFO	First In, First Out
GPIO	general purpose input/output
HAPI	Hardware Assisted Parallel Interface
I/O	Input/Output
LED	light-emitting diode
LSB	least significant bit
MSB	most significant bit
PCB	printed circuit board
PLL	phase-locked loop
POR	power on reset
QFN	Quad Flat No leads
PROM	programmable read only memory
RAM	random access memory
SIE	Serial Interface Engine
SSOP	Shrink small-outline package
USB	Universal Serial Bus

Document Conventions

Units of Measure

The following table lists all the abbreviations used to measure the PSoC devices.

Symbol	Unit of Measure
°C	degree Celsius
cm	centi meter
mm	milli meter
kΩ	kilo ohms
µA	micro Amperes
µs	micro seconds
mA	milli Amperes
ms	milli seconds
ns	nano seconds
Ω	ohms
pF	pico Farad
MHz	Mega Hertz
V	Volts
mW	milli Watts

Numeric Naming

Hexadecimal numbers are represented with all letters in uppercase with an appended lowercase 'h' (for example, '14h' or '3Ah'). Hexadecimal numbers may also be represented by a '0x' prefix, the C coding convention. Binary numbers have an appended lowercase 'b' (for example, 01010100b' or '01000011b'). Numbers not indicated by an 'h', 'b', or 0x are decimal.

Downloaded from Arrow.com.

Document History Page

Document Title: CY7C66013C/CY7C66113C, Full-Speed USB (12 Mbps) Peripheral Controller with Integrated Hub Document Number: 38-08024				
Rev.	**ECN No.**	**Orig. of Change**	**Submission Date**	**Description of Change**
**	114525	DSG	3/27/02	Change from Spec number: 38-00591 to 38-08024
*A	124768	MON	03/20/03	Added register bit definitions; Added default bit state of each register. Corrected the Schematic (location of the pull-up on D+). Added register summary. Removed information on the availability of the part in PDIP package. Modified Table 51 and provided more explanation regarding locking/unlocking mechanism of the mode register. Removed any information regarding the speed detect bit in Hub Port Speed register being set by hardware.
*B	417632	BHA	See ECN	Updated part number and ordering information. Added QFN Package Drawing and Design Notes. Corrected bit names in Figures 9-3, 9-4, 9-5, 9-8, 9-9, 9-10, 10-5, 16-1, 18-1, 18-2, 18-3, 18-6, 18-7, 18-9, 18-10. Removed Hub Ports Force Low register address 0x52. Added HAPI to Interrupt Vector Number 11 in Table 16-1. Corrected bit names in Section 21.0. Corrected Units in Table 24.0 for R_{UUP}, R_{UDN}, R_{EXT}, and $Z_{O.}$ Added DIE diagram and related information. Added HAPI to GPIO interrupt vector in Table 5-1 and figure 16-3
*C	1825466	TLY / PYRS	See ECN	Changed Title from “CY7C66013, CY7C66113 Full Speed USB (12 Mbps) Peripheral Controller with Integrated Hub” to “CY7C66013C, CY7C66113C Full Speed USB (12 Mbps) Peripheral Controller with Integrated Hub”. Changed package description for CY7C66013C and CY7C66113C from -PVC to -PVXC
*D	2720540	DPT / AESA	06/18/09	Added 56 QFN 8x8x1 mm package diagram and ordering information
*E	2896318	AESA	03/18/10	Removed Part CY7C66113C-LFXC. Updated all package diagrams.
*F	3057657	AJHA	10/13/10	Added “Not recommended for new designs” watermark in the PDF. No technical or content updates.
*G	3177081	NXZ	02/18/2011	Added Ordering Code Definitions under Ordering Information. Added Acronyms and Units of Measure. Updated to new template.
*H	4313900	AKSL	03/21/2014	Removed “Not recommended for new designs” watermark. Updated Package Diagrams.
*I	5693560	HBM	04/12/2017	Updated to new template. Completing Sunset Review.

Downloaded from Arrow.com.

Sales, Solutions, and Legal Information

Worldwide Sales and Design Support

Cypress maintains a worldwide network of offices, solution centers, manufacturer's representatives, and distributors. To find the office closest to you, visit us at Cypress Locations.

Products

ARM® Cortex® Microcontrollers	cypress.com/arm
Automotive	cypress.com/automotive
Clocks & Buffers	cypress.com/clocks
Interface	cypress.com/interface
Internet of Things	cypress.com/iot
Memory	cypress.com/memory
Microcontrollers	cypress.com/mcu
PSoC	cypress.com/psoc
Power Management ICs	cypress.com/pmic
Touch Sensing	cypress.com/touch
USB Controllers	cypress.com/usb
Wireless Connectivity	cypress.com/wireless

PSoC® Solutions

PSoC 1 | PSoC 3 | PSoC 4 | PSoC 5LP

Cypress Developer Community

Forums | WICED IOT Forums | Projects | Video | Blogs | Training | Components

Technical Support

cypress.com/support

© Cypress Semiconductor Corporation, 2002–2017. This document is the property of Cypress Semiconductor Corporation and its subsidiaries, including Spansion LLC ("Cypress"). This document, including any software or firmware included or referenced in this document ("Software"), is owned by Cypress under the intellectual property laws and treaties of the United States and other countries worldwide. Cypress reserves all rights under such laws and treaties and does not, except as specifically stated in this paragraph, grant any license under its patents, copyrights, trademarks, or other intellectual property rights. If the Software is not accompanied by a license agreement and you do not otherwise have a written agreement with Cypress governing the use of the Software, then Cypress hereby grants you a personal, non-exclusive, nontransferable license (without the right to sublicense) (1) under its copyright rights in the Software (a) for Software provided in source code form, to modify and reproduce the Software solely for use with Cypress hardware products, only internally within your organization, and (b) to distribute the Software in binary code form externally to end users (either directly or indirectly through resellers and distributors), solely for use on Cypress hardware product units, and (2) under those claims of Cypress's patents that are infringed by the Software (as provided by Cypress, unmodified) to make, use, distribute, and import the Software solely for use with Cypress hardware products. Any other use, reproduction, modification, translation, or compilation of the Software is prohibited.

TO THE EXTENT PERMITTED BY APPLICABLE LAW, CYPRESS MAKES NO WARRANTY OF ANY KIND, EXPRESS OR IMPLIED, WITH REGARD TO THIS DOCUMENT OR ANY SOFTWARE OR ACCOMPANYING HARDWARE, INCLUDING, BUT NOT LIMITED TO, THE IMPLIED WARRANTIES OF MERCHANTABILITY AND FITNESS FOR A PARTICULAR PURPOSE. To the extent permitted by applicable law, Cypress reserves the right to make changes to this document without further notice. Cypress does not assume any liability arising out of the application or use of any product or circuit described in this document. Any information provided in this document, including any sample design information or programming code, is provided only for reference purposes. It is the responsibility of the user of this document to properly design, program, and test the functionality and safety of any application made of this information and any resulting product. Cypress products are not designed, intended, or authorized for use as critical components in systems designed or intended for the operation of weapons, weapons systems, nuclear installations, life-support devices or systems, other medical devices or systems (including resuscitation equipment and surgical implants), pollution control or hazardous substances management, or other uses where the failure of the device or system could cause personal injury, death, or property damage ("Unintended Uses"). A critical component is any component of a device or system whose failure to perform can be reasonably expected to cause the failure of the device or system, or to affect its safety or effectiveness. Cypress is not liable, in whole or in part, and you shall and hereby do release Cypress from any claim, damage, or other liability arising from or related to all Unintended Uses of Cypress products. You shall indemnify and hold Cypress harmless from and against all claims, costs, damages, and other liabilities, including claims for personal injury or death, arising from or related to any Unintended Uses of Cypress products.

Cypress, the Cypress logo, Spansion, the Spansion logo, and combinations thereof, WICED, PSoC, CapSense, EZ-USB, F-RAM, and Traveo are trademarks or registered trademarks of Cypress in the United States and other countries. For a more complete list of Cypress trademarks, visit cypress.com. Other names and brands may be claimed as property of their respective owners.

Downloaded from Arrow.com.