© 2021 TE Connectivity. All Rights Reserved.

REVISIONS					
P	LTR	DESCRIPTION	DATE	DWN	APVD
	B	INITIAL RELEASE	18NOV2021	RM	CS
	B1	UPFATE DRAWING	21MAR2022	SA	CS

SUBASSEMBLY INTERFACE ADAPTER, SHORT 2327550-1
Subassembly Schnittstellen Adapter, Kurz 2327550-1

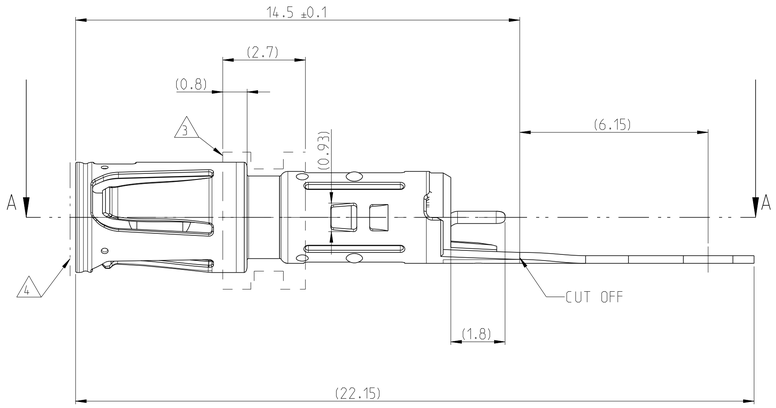

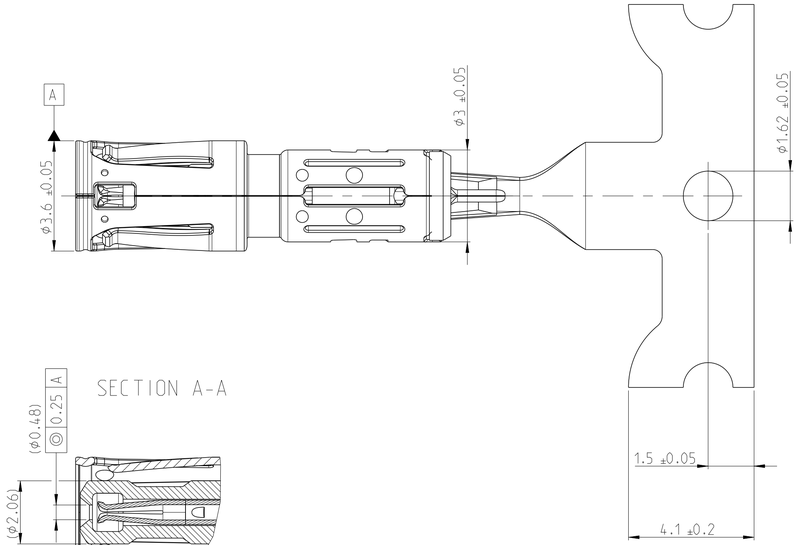

UNWINDING DIRECTION
SCALE 2:1

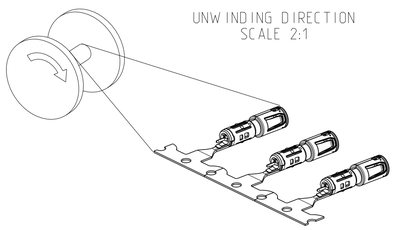

SUBASSEMBLY INTERFACE ADAPTER, LONG 2327550-3
Subassembly Schnittstellen Adapter, lang 2327550-3

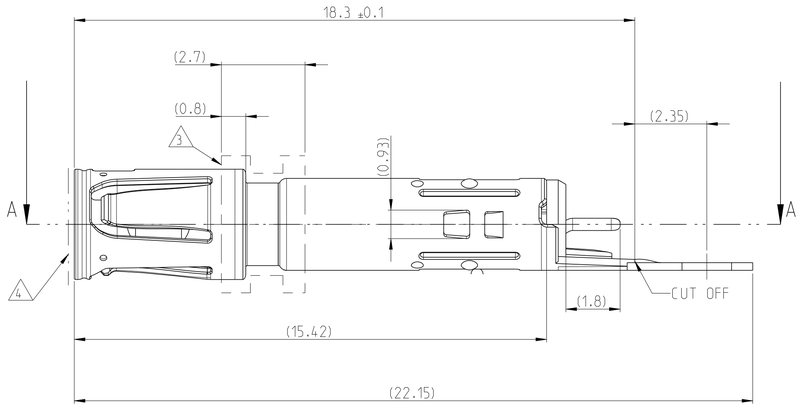

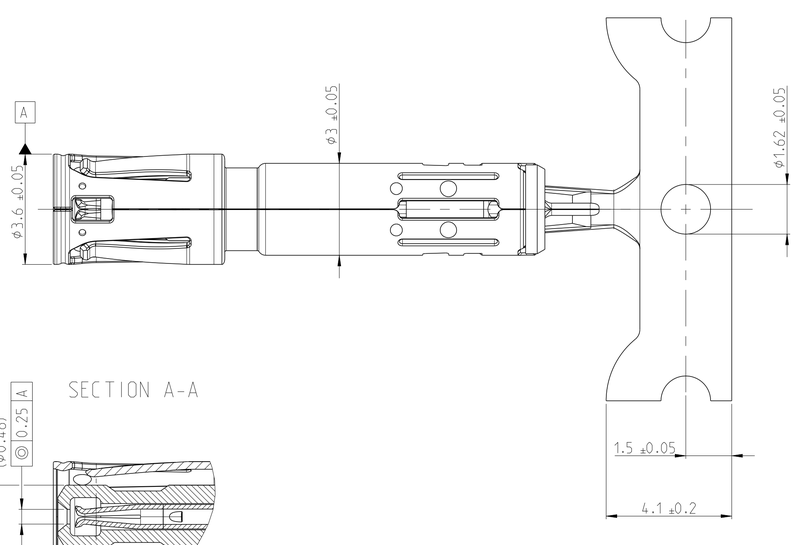

UNWINDING DIRECTION
SCALE 2:1

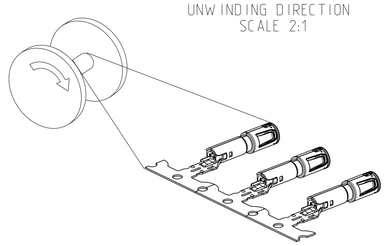

NOTES
Bemerkungen

1. PACKAGING: PRODUCT REELED ON CORRUGATED REEL WITH INTERLEAVING PAPER
Verpackung: Spulenware auf Wellpappespule mit Zwischenlagenpapier

△2 WEIGHT INCLUDING CARRIER STRIP
Gewicht mit Trägerstreifen

△3 ALLOWED AREA FOR CONTACT GRIPPING FOR TERMINATION
Zulaessiger Bereich zum Greifen des Kontaktes bei der Verarbeitung

△4 DURING THE PROCCESING, THE CONTACT MAY BE LOADED WITH MAX. 30N IN AXIAL DIRECTION
Bei der Verarbeitung darf der Kontakt an gezeigter Stelle axial mit max. 30N belastet werden

△5 LOCATION FOR MARKING TE LOGO, PART REVISION DATE CODE, TOOL NUMBER
Lage der Markierung fur TE logo, Teile Rev., Datumscode, Werkzeugnummer

PART MARKING VIEW
SCALE 5:1

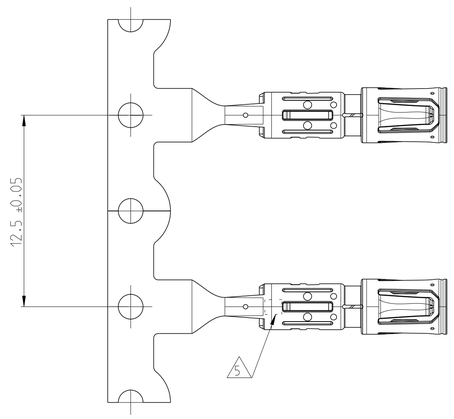

DESCRIPTION	COMPONENT DESCRIPTION	MATERIAL	SURFACE	△2 WEIGHT (g)	REV	PN
INTERFACE ADAPTER SHORT	OUTER CONTACT	CuSn	Sn	0.29	B	2327550-1
	CENTER CONTACT	CuSn	Ag			
	DIELECTRIC	PBT	NATURAL			
INTERFACE ADAPTER LONG	OUTER CONTACT	CuSn	Sn	0.39	B	2327550-3
	CENTER CONTACT	CuSn	Ag			
	DIELECTRIC	PBT	NATURAL			

THIS DRAWING IS A CONTROLLED DOCUMENT.

DIMENSIONS: mm

TOLERANCES UNLESS OTHERWISE SPECIFIED:
0 PLC ±0.2
1 PLC ±0.1
2 PLC ±0.1
3 PLC ±-
4 PLC ±-
ANGLES ±1

MATERIAL -
FINISH -

DWN Raghavendra.M 17NOV2021
CHK S.Aboulkassem 13DEC2021
APVD C.Schrettlinger 13DEC2021
PRODUCT SPEC 108-94515
APPLICATION SPEC 114-94566
WEIGHT -

TE Connectivity

NAME MATE-AX, 90DEG, ADAPTER ASSY
INTERFACE SIDE

SIZE A1 | CAGE CODE 00779 | DRAWING NO C-2327550 | RESTRICTED TO -

CUSTOMER DRAWING | SCALE 10:1 | SHEET 1 OF 1 | REV B1

Downloaded from Arrow.com.