THIS DRAWING IS UNPUBLISHED. RELEASED FOR PUBLICATION –,– .
© COPYRIGHT – TE Connectivity Ltd. ALL RIGHTS RESERVED.

REVISIONS

P	LTR	DESCRIPTION	DATE	DWN	APVD
	D1	REVISED PER ECO–17–008114	05JUN2018	RS	DR

AMP WIRE RANGE	E13288 Listed	LR7189 Certified
22–16 AWG SOLID OR STRANDED	22–16 AWG SOLID OR STRANDED	22–16 AWG SOLID OR STRANDED

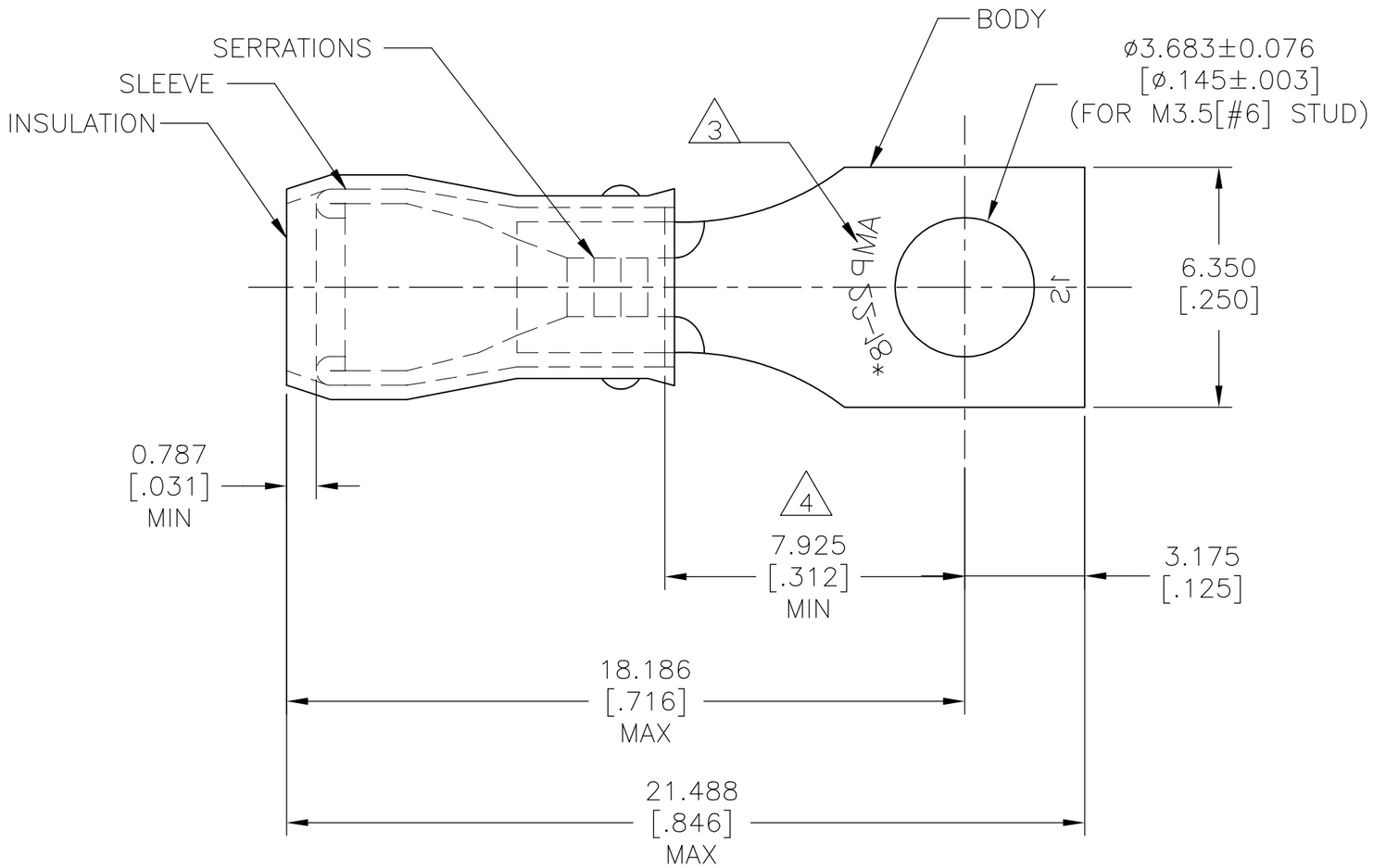

1 BODY MATERIAL THK: 0.787±0.051[.031±.002]

2 FOR 2.667 TO 3.556[.105 TO .140] WIRE INS. DIA

△3 MARKING 22–18 FOR MILITARY COMMERCIAL RANGE 22–16

△4 APPLIES FROM EDGE OF METAL WIRE BARREL TO CENTER OF STUD HOLE

△5 MATERIAL:
BODY & SLEEVE: COPPER PER ASTM B152
INSULATION: NYLON

△6 FINISH:
BODY & SLEEVE: TIN PL PER ASTM B545
INSULATION: COLOR – RED

QTY	PACKAGE TYPE	PART NO
100	LOOSE PC, BOX	8–33476–1
1000	LOOSE PIECE	33476

AMP INCORPORATED
CUSTOMER SERVICE SYSTEMS

FOR ADDITIONAL PRODUCT INFORMATION OR COPIES OF DRAWINGS AND TECHNICAL DOCUMENTS	PRODUCT INFORMATION CENTER 1–800–522–6752
FOR APPLICATION TOOLING INFORMATION	TOOLING ASSISTANCE CENTER 1–800–722–1111
FOR ORDER ENTRY	1–800–526–5142

MAX RECOMMENDED OPERATING TEMPERATURE: 105°C [221°F]

VOLTAGE RATING: 300 V MAX

WIRE CROSS SECTIONAL AREA RANGE, 0.26–1.65mm²[509–3260] CIR MILS SOLID OR STRANDED

THIS DRAWING IS A CONTROLLED DOCUMENT.

DIMENSIONS: mm [INCHES]

TOLERANCES UNLESS OTHERWISE SPECIFIED:
0 PLC ± –
1 PLC ± –
2 PLC ± –
3 PLC ± 0.127[.005]
4 PLC ± –
ANGLES ± 5°

MATERIAL △5 FINISH △6

DWN	04JUN2018 RAVI S
CHK	04JUN2018 ROHDE DANIEL F
APVD	04JUN2018 ROHDE DANIEL F
PRODUCT SPEC	UL 486 A–B
APPLICATION SPEC	114–2157
WEIGHT	

TE Connectivity Ltd.

NAME: WIRE TERMINAL, P.I.D.G. – RECTANGULAR TONGUE, WIRE SIZE: 22–16 AWG

SIZE	CAGE CODE	DRAWING NO	RESTRICTED TO
A3	00779	C–33476	–

CUSTOMER DRAWING | SCALE NTS | SHEET 1 OF 1 | REV D1

1470–19 (1/15)

Downloaded from Arrow.com.