DA14531 SMARTBOND TINY™ MODULE Development Kit Hardware User Manual

UM-B-141

Abstract

This document outlines the system design, configuration options and supported features of DA14531 SMARTBOND TINY™ MODULE Development Kit, PCB version 376-25-C.

Downloaded from Arrow.com.

Contents

Abstract **1**

1 Terms and Definitions **4**

2 References **4**

3 Introduction **5**

4 System Overview **6**

4.1 Features 6

4.2 System and components description 7

4.3 Block Diagram 10

5 DA14531 SmartBond TINY™ Module Daughterboard **11**

5.1 Power Section 11

5.1.1 Default Power Supply Option Configuration 11

5.1.2 Optional USB power section 12

5.2 Reset operation 12

5.3 General Purpose Buttons 12

5.4 General Purpose LEDs 13

5.5 MikroBUS™ Module 14

5.6 JTAG 16

5.7 UART 17

5.8 GPIOs and pin assignment on DA14531 SMARTBOND TINY™ MODULE DB 17

5.9 Programming and debugging interface setup 19

5.9.1 Single wire UART, JTAG, RESET 20

5.9.2 2-wire UART, JTAG, RESET 21

5.9.3 4-wire UART, JTAG, RESET 21

5.10 First Steps with DA14531 SMARTBOND TINY™ MODULE DEVKIT 23

6 Known Issues **24**

6.1 Keil JTAG default Clock Speed 24

Appendix A **26**

A.1 Schematic 26

A.2 Placed Components 27

Revision History **28**

Figures

Figure 1: DA14531 SMARTBOND TINY™ MODULE DB 5
Figure 2: DA14531 SMARTBOND TINY™ MODULE DEVKIT 6
Figure 3: Component description. Top side. 7
Figure 4: Component description. Bottom side. 8
Figure 5: DA14531 SMARTBOND TINY™ MODULE DB Block Diagram 10
Figure 6: Power option selection for DA14531 SMARTBOND TINY™ MODULE DB 11
Figure 7: Power option default configuration 11
Figure 8: Optional USB power supply section 12
Figure 9: Reset Button on DA14531 SMARTBOND TINY™ MODULE DB 12
Figure 10: General purpose push buttons on DA14531 SMARTBOND TINY™ MODULE DB 13

© 2022 Renesas Electronics

Downloaded from Arrow.com.

Figure 11: Default general purpose push button (SW2) on DA14531 SMARTBOND TINY™ MODULE DB 13
Figure 12: SW2 configuration on DA145xx DEVKT-P PRO-MB 13
Figure 13: General Purpose LEDs on DA14531 SMARTBOND TINY™ MODULE DB 14
Figure 14: Default LED on DA14531 SMARTBOND TINY™ MODULE DB 14
Figure 15: D5 LED configuration on DA145xx DEVKT-P PRO-MB 14
Figure 16: Default programming interface of MikroBUS™ module on DA14531 SMARTBOND TINY™ MODULE DB 15
Figure 17: MikroBUS™ module Socket on DA14531 SMARTBOND TINY™ MODULE DB 15
Figure 18: Example of mounting MikroBUS™ module 16
Figure 19: Optional debug port 16
Figure 20: DA145xx DEVKT-P PRO-MB jumper setup for Single wire UART, JTAG and RESET operation 20
Figure 21: DA145xx DEVKT-P PRO-MB jumper setup for 2-wire UART, JTAG and RESET operation 21
Figure 22: DA145xx DEVKT-P PRO-MB jumper setup for 4-wire UART, JTAG and RESET operation 22
Figure 23: DA145xx DEVKT-P PRO-MB First Steps Jumper Configuration with DA14531 SMARTBOND TINY™ MODULE DB attached 23
Figure 24: Keil reporting error when try to open debugger session 24
Figure 25: Steps to set up JTAG clock speed 24
Figure 26: Schematic of DA14531 SMARTBOND TINY™ MODULE DB [376-25-C] 26
Figure 27: Components on top and bottom sides for DA14531 SMARTBOND TINY™ MODULE DB [376-25-C] 27

Tables

Table 1: Test Points Description 8
Table 2: MikroBUS™ GPIOs multiplexing 15
Table 3: JTAG signals assignment 16
Table 4: DA14531 SMARTBOND TINY™ MODULE DB UART Signals 17
Table 5: GPIO multiplexing on DA14531 SMARTBOND TINY™ MODULE DB 17
Table 6: Power, SPI Flash and programming/debugging jumper setup of DA145xx DEVKT-P PRO-MB for TINY™ MODULE 19
Table 7: Pin assignment for DA14531 SMARTBOND TINY™ MODULE Configuration 1 20
Table 8: Pin assignment for DA14531 SMARTBOND TINY™ MODULE configuration 2 21
Table 9: Pin assignment for DA14531 SMARTBOND TINY™ MODULE configuration 3 21

© 2022 Renesas Electronics

Downloaded from Arrow.com.

1 Terms and Definitions

DEVKIT	Development Kit
DB	Daughterboard
USB	Universal Serial Bus
JTAG	Join Test Action Group
UART	Universal Asynchronous Receiver-Transmitter
SDK	Software Development Kit
SoC	System on Chip
GPIO	General Purpose Input Output
LDO	Low Dropout
QSPI	Quad Serial Peripheral Interface
SPI	Serial Peripheral Interface
I^2C	Inter-Integrated Circuit
SMD	Surface-Mount Device
PCB	Printed Circuit Board

2 References

[1] UM-B-114, DA14531 Devkit-Pro-Hardware, User Manual, Dialog Semiconductor

[2] DA14531 TINY Module, Datasheet, Dialog Semiconductor.

[3] DA14531, Datasheet, Dialog Semiconductor

© 2022 Renesas Electronics

Downloaded from Arrow.com.

3 Introduction

This document describes the DA14531 SMARTBOND TINY™ MODULE Development Kit. The development kit is implemented on a single Daughterboard (DB) PCB and it comes with DA145xx DEVKT-P PRO-MB for SW development, programming, debugging and measuring current but also can be used stand alone.

The block diagram, the actual board, the various sections and settings as well as the connectivity are presented. The purpose of this Daughterboard is to provide users with the capability for:

- Access to the DA14531 SMARTBOND TINY™ MODULE, via UART or JTAG
- Connecting MikroBUS™ module
- User access to general purpose LED(s)
- User access general purpose button(s)
- Reset button
- Test points for all output signals
- Stand-alone operation

Figure 1: DA14531 SMARTBOND TINY™ MODULE DB

© 2022 Renesas Electronics

Downloaded from Arrow.com.

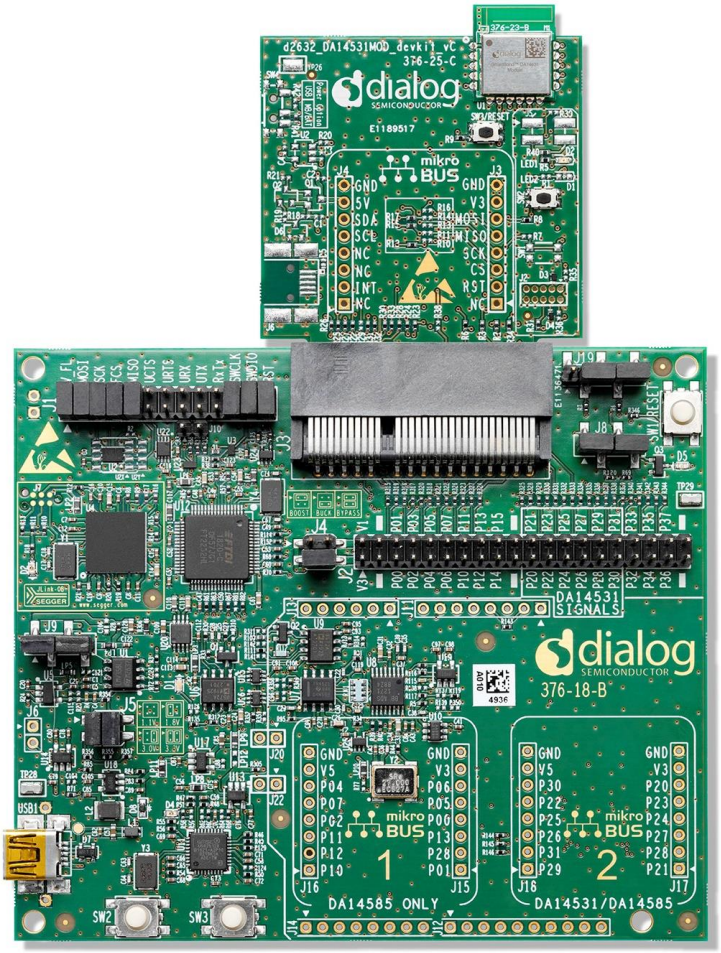

Figure 2: DA14531 SMARTBOND TINY™ MODULE DEVKIT

4 System Overview

4.1 Features

The features of DA14531 SMARTBOND TINY™ MODULE DB include:

- Integrated Dialog Semiconductor DA14531 SMARTBOND TINY™ MODULE
- Reset push button (SW3)
- A set of general-purpose LED and button (LED1 and SW2)
- Supply from VLDO (3V) from DA145xx DEVKT-P PRO-MB or from coin cell battery
- Capability of mounting a MikroBUS™ module (J3, J4)
- JTAG and UART interface over DA145xx DEVKT-P PRO-MB
- JTAG and UART interface over on-board header (J2)
- Stand-alone operation
- A dimension of 58.43x44.46 mm
- Optional features:
  - Power supply option from USB connector (only for power not for debugging). User must solder the components.

© 2022 Renesas Electronics

Downloaded from Arrow.com.

- Location on board for a second set of LED and button (LED2 and SW1). User must solder the components.

4.2 System and components description

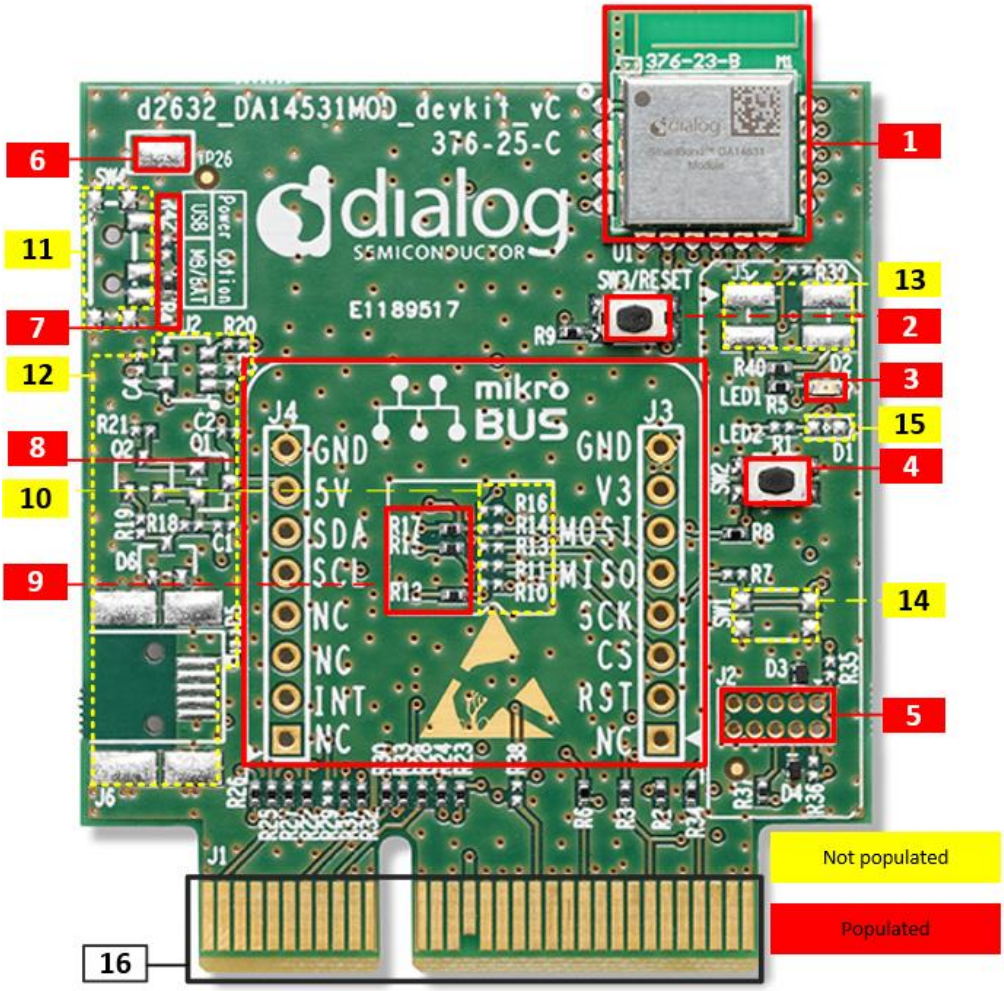

Figure 3: Component description. Top side.

The marked and numbered sections of the system are:

1. DA14531 SMARTBOND TINY™ MODULE (U1)
2. Reset button (SW3/RESET)
3. General purpose LED (D2)
4. General purpose button (SW2)
5. JTAG debugger connector (J2)
6. GND pad (TP26)
7. Power supply configuration resistor (VLDO of PRO-MB/ Coin cell battery or USB)
8. MikroBUS™ connection points (J3, J4)
9. MikroBUS™ configuration resistors for I²C interface
10. MikroBUS™ configuration resistors for SPI interface

© 2022 Renesas Electronics

Downloaded from Arrow.com.

11. Power switch (SW4). Selection between VLDO from PRO-MB/ Coin cell battery or USB power supply. ***Optional.***
12. USB power supply section with OVP circuit. ***Optional*.**
13. Jumper header for LED isolation(J5). ***Optional*.**
14. General purpose button (SW1). ***Optional.***
15. General purpose LED (D1). ***Optional.***
16. Mating connector on the PCB (J1).

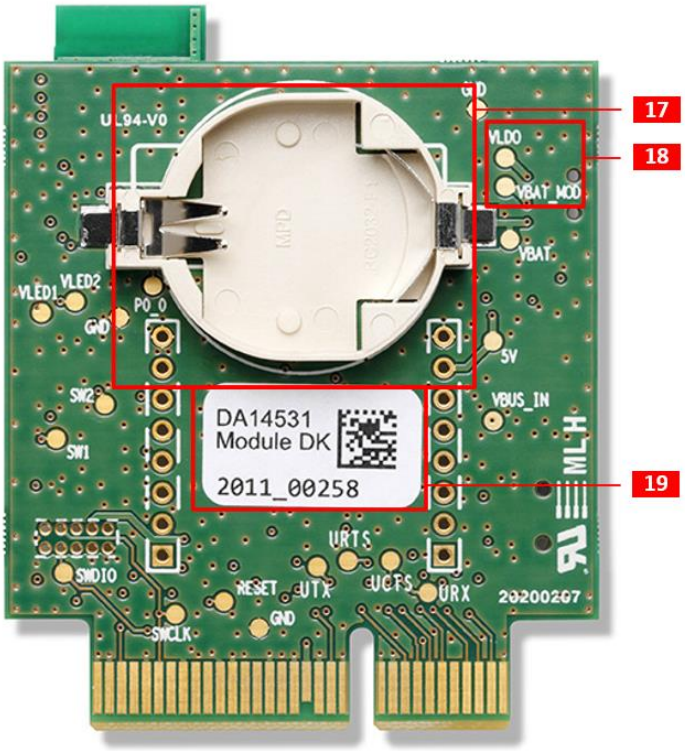

Figure 4: Component description. Bottom side.

The bottom side of the kit provides battery case for a CR2032 coin cell battery. Test points have been placed for monitoring various signal behaviors and voltage levels of the components. The marked and numbered sections of the system are:

17. Coin cell battery (BT1)
18. Test points (see Table 1 for more details)
19. Dialog label

Table 1: Test Points Description

Test Point	Assigned to	Comments
TP1	FIDUCIAL	Not electrically connected
TP2	FIDUCIAL	Not electrically connected
TP3	GND	Ground
TP7	SWCLK	JTAG Interface- Clock Signal
TP8	VLED1	Voltage level of RED LED (D1)
TP9	SWDIO	JTAG Interface DIO Signal

© 2022 Renesas Electronics

Downloaded from Arrow.com.

Test Point	Assigned to	Comments
TP10	VLED2	Voltage Level of Green LED (D2)
TP12	RESET	Reset
TP13	SW1	General purpose button (driven from P0_6 signal)
TP14	SW2	General purpose button (driven from P0_11 signal)
TP15	SW3	Reset button (driven from P0_0 signal)
TP16	MikroBUS™ LOGO	Not electrically connected
TP18	5V	USB +5V voltage level after OVP circuit
TP19	VBUS_IN	USB +5V voltage level
TP20	VLDO	LDO (U2) 3.3V output voltage level
TP21	VBAT_MOD	Power supply rail of DA14531 SMARTBOND TINY™ MODULE
TP22	VBAT	Power supply rail of VLDO of DA145xx DEVKT-P PRO-MB or external coin cell battery
TP23	ESD_WARNING SIGN	Not electrically connected
TP24	GND	Ground
TP25	GND	Ground
TP26	GND	Ground
TP27	URX	4-wire UART RX Signal
TP28	UTX	4-wire UART TX Signal
TP29	UCTS	4-wire UART CTS Signal
TP30	URTS	4-wire UART RTS Signal

© 2022 Renesas Electronics

Downloaded from Arrow.com.

4.3 Block Diagram

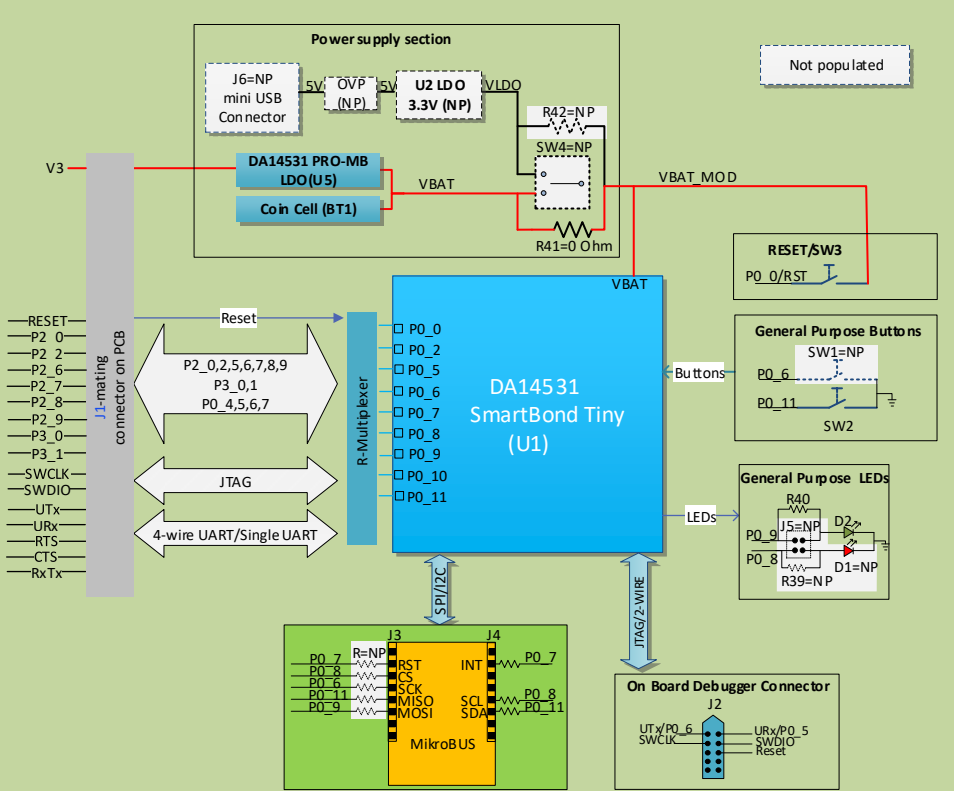

Figure 5: DA14531 SMARTBOND TINY™ MODULE DB Block Diagram

© 2022 Renesas Electronics

Downloaded from Arrow.com.

5 DA14531 SmartBond TINY™ Module Daughterboard

5.1 Power Section

The power supply on the DA14531 SMARTBOND TINY™ MODULE DB supports three options:

- Power supply from DA145xx DEVKT-P PRO-MB. The supply voltage comes from VLDO setup (U5) with output voltage range to meet recommended operating conditions of DA14531 SmartBond TINY™ Module. See [1] for recommended operating conditions and Table 6 for VLDO selection.
- Power supply from Coin cell battery (BT1). Battery case is mounted on bottom side of the daughterboard. **Notice**: **User must not mount coin cell battery when daughterboard is supplied from DA145xx DEVKT-P PRO-MB.**
- +5V USB Power Supply (J6 connector) with Over Voltage Protection Circuit (OVP). ***Optional.***

Using power supply from VLDO of DA145xx DEVKT-P PRO-MB, allows user to measure Current drawn from the DA14531 SmartBond TINY™ Module by using the current sensing circuit and the power profiler of Dialog's SmartSnippets Toolbox. For more information regarding current measurement refer to **Error! Reference source not found.**.

5.1.1 Default Power Supply Option Configuration

Power selection between DA145xx DEVKT-P PRO-MB VLDO/ Coin Cell battery and USB Power Supply is done in two ways:

- Using resistors R41, R42:
  - R41 - Power supply from DA145xx DEVKT-P PRO-MB / Coin Cell. **Default configuration**.
  - R42 - VLDO (3.3V) of USB power section. ***Optional.***
- Using SW4 power switch. ***Optional***.

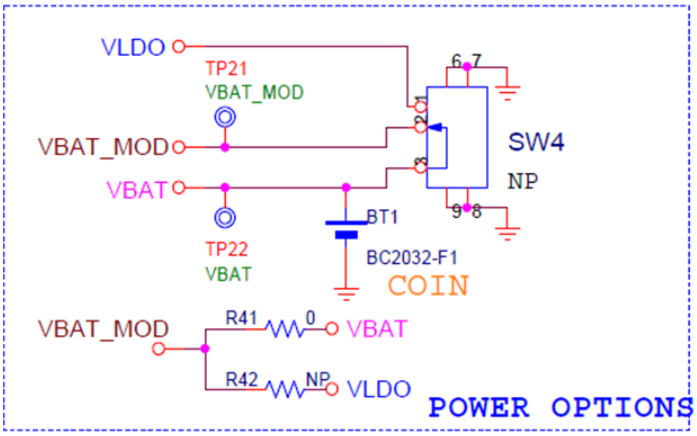

Figure 6: Power option selection for DA14531 SMARTBOND TINY™ MODULE DB

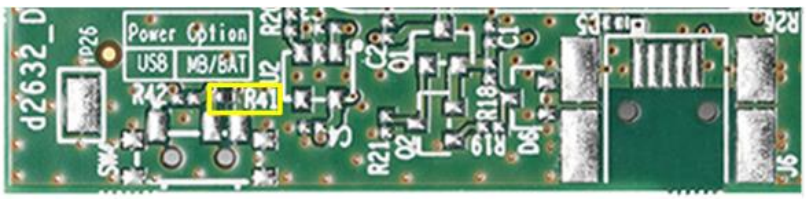

Figure 7: Power option default configuration

© 2022 Renesas Electronics

Downloaded from Arrow.com.

5.1.2 Optional USB power section

USB power section consists of the following parts:

- Mini Type B USB connector (J6)
- OVP circuit
- LDO (3.3V) regulator (U2)

USB power section is not populated.

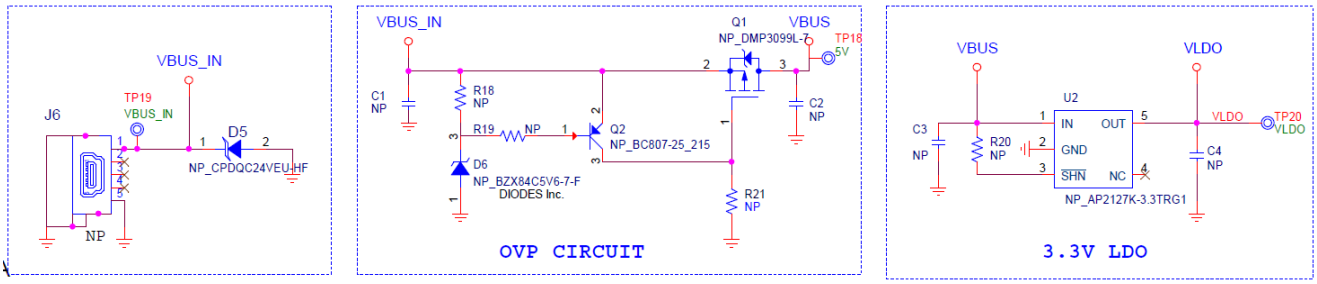

Figure 8: Optional USB power supply section

5.2 Reset operation

Reset operation on the DA14531 SMARTBOND TINY™ MODULE can be activated with one of the following ways:

- By pressing the on board RESET button (SW3)
- Through software from the UART & JTAG interface of DA145xx DEVKT-P PRO-MB
- By pressing RESET button on DA145xx DEVKT-P PRO-MB (SW1)

Reset signal is connected to P0_0.

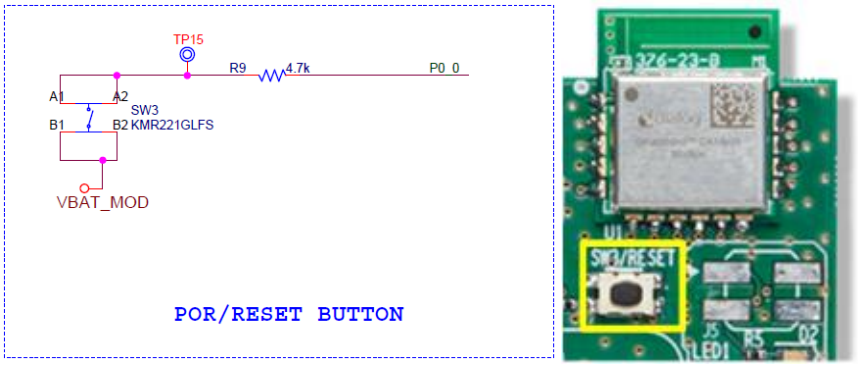

Figure 9: Reset Button on DA14531 SMARTBOND TINY™ MODULE DB

5.3 General Purpose Buttons

Push button SW2 is populated and placed on top side of the board (Figure 11). It is connected to P0_11(Figure 10) and shares the same configuration with SW2 button of DA145xx DEVKT-P PRO-MB **(**SW2 is connected to P3_1 on the motherboard which is P0_11 on DA14531**)**. See Figure 12**.**

SW1 is not populated (Figure 11). It is connected to P0_6 (Figure 10).

© 2022 Renesas Electronics

Downloaded from Arrow.com.

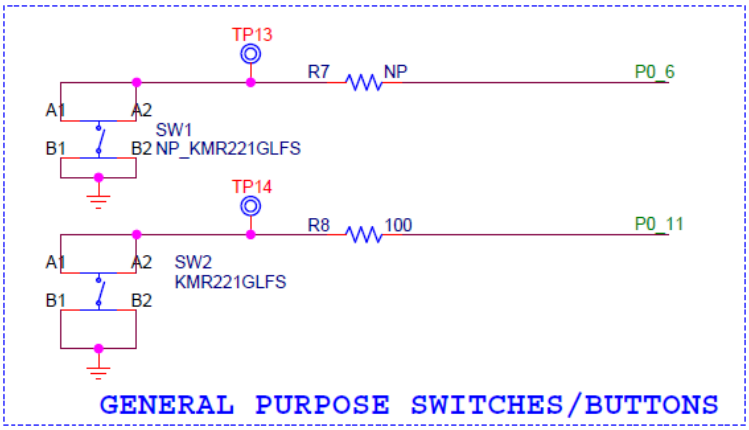

Figure 10: General purpose push buttons on DA14531 SMARTBOND TINY™ MODULE DB

Figure 11: Default general purpose push button (SW2) on DA14531 SMARTBOND TINY™ MODULE DB

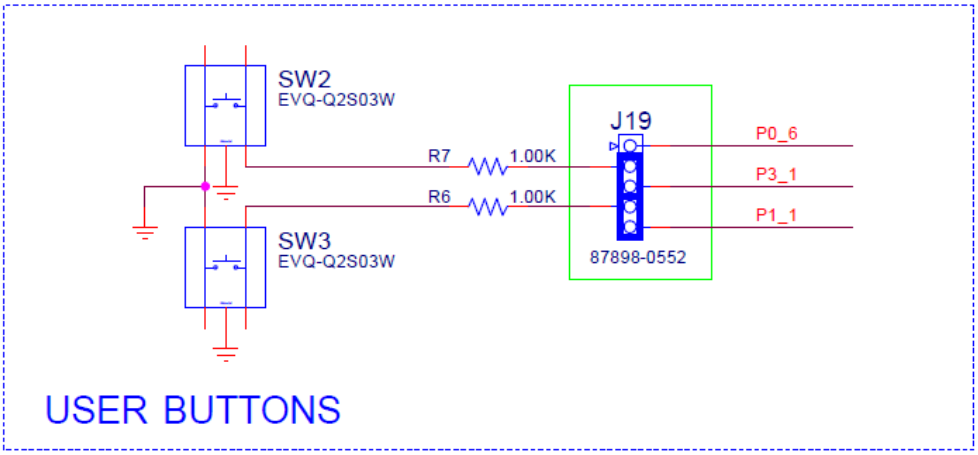

Figure 12: SW2 configuration on DA145xx DEVKT-P PRO-MB

5.4 General Purpose LEDs

LED D2 is a general-purpose LED and it is driven by P0_9. LED D2 shares same configuration as LED D5 of DA145xx DEVKT-P PRO-MB (D5 is driven by P1_0 of motherboard which is P0_9 of DA14531). See Figure 15.

LED D1 is driven by P0_8 and it is not populated. User can mount a LED like D2.

General purpose LEDs circuitry is completed with Jumper header J5. J5 is optional and it isolates signals P0_8 and P0_9 when LEDs function is not used, so signals can be directed to other functions.

© 2022 Renesas Electronics

Downloaded from Arrow.com.

Header J5 by default is not populated. Instead resistors R39 and R40 are used in order to configure the connection of LEDs to the signals (Figure 13, Figure 14).

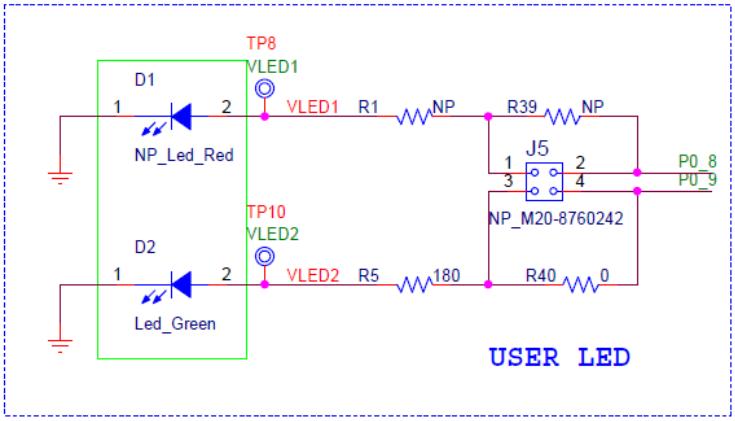

Figure 13: General Purpose LEDs on DA14531 SMARTBOND TINY™ MODULE DB

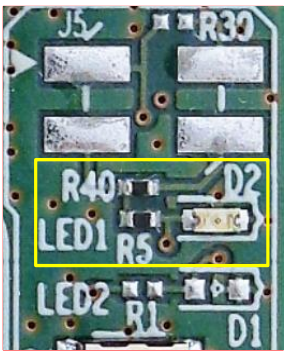

Figure 14: Default LED on DA14531 SMARTBOND TINY™ MODULE DB

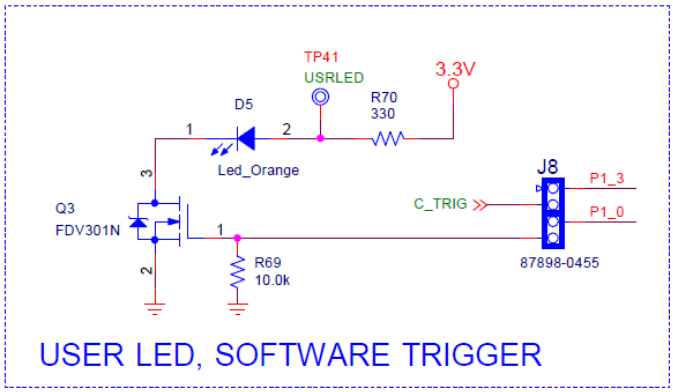

Figure 15: D5 LED configuration on DA145xx DEVKT-P PRO-MB

5.5 MikroBUS™ Module

The DA14531 SMARTBOND TINY™ MODULE DB can support MikroBUS™ modules. It requires some level of GPIOs multiplexing to avoid conflict with other functions driven by same GPIOs.

A MikroBUS™ module requires a power supply of 5V, 3.3V or both, depending on the module. The current configuration of the daughterboard supports only 3.3V. If a voltage of 5V is required, then USB power section needs to be populated.

© 2022 Renesas Electronics

Downloaded from Arrow.com.

Signals available for MikroBUS™ module can be seen in the Table 2. I²C signals and INT are the default configuration for the MikroBUS™ module. For SPI interface and RST additional resistors must be populated (Figure 16, Figure 17).

DA14531 SMARTBOND TINY™ MODULE DB MikroBUS™ doesn't share same GPIO signals as DA145xxx DEVKT-P PRO-MB MikroBUS™.

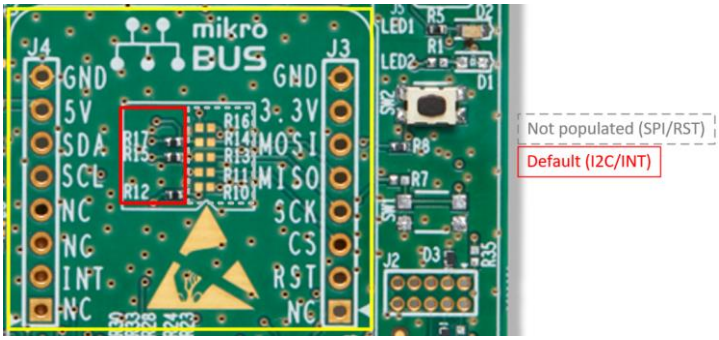

Figure 16: Default programming interface of MikroBUS™ module on DA14531 SMARTBOND TINY™ MODULE DB

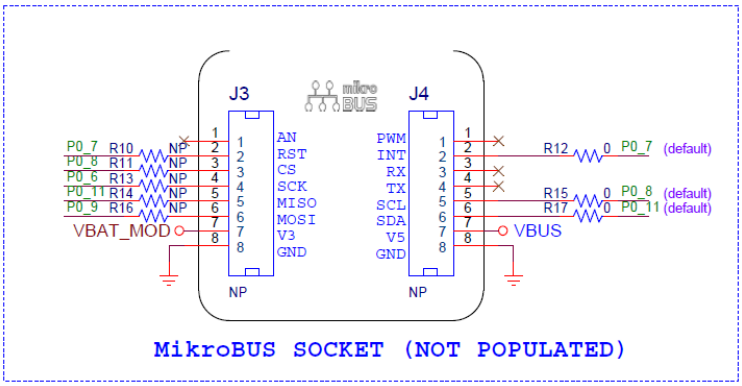

Figure 17: MikroBUS™ module Socket on DA14531 SMARTBOND TINY™ MODULE DB

Table 2: MikroBUS™ GPIOs multiplexing

		MikroBUS™		
DA14531 SMARTBOND TINY™ MODULE GPIOs	**Peripherals**	**I²C**	**SPI**	**Other**
P0_6	SW1		SCK	
P0_11	SW2	SDA (default)	MISO	
P0_8	LED D1	SCL (default)	CS	
P0_9	LED D2		MOSI	
P0_7				INT (default)
				RST

© 2022 Renesas Electronics

Downloaded from Arrow.com.

Figure 18: Example of mounting MikroBUS™ module

5.6 JTAG

DA14531 SMARTBOND TINY™ MODULE DB provides JTAG interface with SWDIO and SWCLK signals assigned to P0_2 and P0_10 (Table 3). JTAG signals are also available on header J2 (Figure 19).

Table 3: JTAG signals assignment

Function		The Signals	
		DA145xx DEVKT-P PRO-MB	DA14531 SMARTBOND TINY™ MODULE DEVKIT
Enabled by Jumpers (on PRO-MB)		J2	DA14531 SMARTBOND TINY™ MODULE
SW_CLK	J1:21-22 (Default)	SWCLK	P0_2
SW_DIO	J1:23-24 (Default)	SWDIO	P0_10

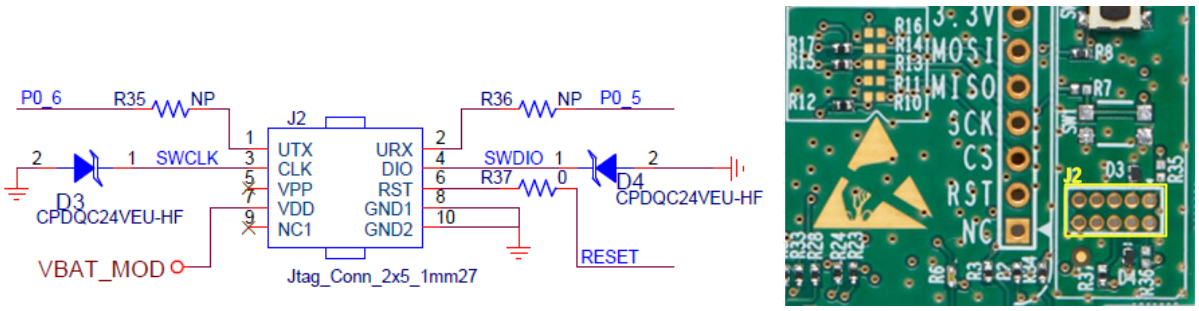

Figure 19: Optional debug port

© 2022 Renesas Electronics

Downloaded from Arrow.com.

5.7 UART

Three modes of UART can be used: single wire UART, 2 wire-UART or full UART.

Table 4: DA14531 SMARTBOND TINY™ MODULE DB UART Signals

Function		The signals		
		DA145xx DEVKT-P PRO-MB		DA14531 SMARTBOND TINY™ MODULE DB
		J2	J1	DA14531 SMARTBOND TINY™ MODULE
UTX	2-wire or Full UART Transmit	P2_6	P0_4	P0_6
URX	2-wire or Full UART Receive	P2_5	P0_5	P0_5
UCTS	2-wire or Full UART Clear to Send	P2_8	P0_6	P0_8
URTS	2-wire or Full UART Request to Send	P2_7	P0_7	P0_7
RxTx	Single wire UART Receive and Transmit	P2_5	P2_5	P0_5

Note 1 UART signals are directly mapped to J1 connector of DA145xx DEVKT-P PRO-MB: Rx, Tx, RTS and CTS.

For enabling the different configurations check section 5.8.

5.8 GPIOs and pin assignment on DA14531 SMARTBOND TINY™ MODULE DB

The DA14531 SMARTBOND TINY™ MODULE DB comes in with a pre-defined default configuration. However, due to the low GPIO pin count, several functions are multiplexed and can be enabled as needed.

On Table 5 DA14531 SMARTBOND TINY™ MODULE GPIOs use on the various functions can be found. On the last column of the table users can check which of the functions are enabled by default with the default hardware setup and which require some hardware modification by adding resistors.

Table 5: GPIO multiplexing on DA14531 SMARTBOND TINY™ MODULE DB

DA14531 SMARTBOND TINY™ MODULE Signals	J1 connector Daughterboard	Function 1	Function 2	Function 3	Comments for functions supported		
P0_0		SW3 (RESET Button)				Default	
	MB2_0						
	RESET		RESET on J2 JTAG connector		Default		Default
P0_2							
	MB2_2						
	SWCLK		SWCLK JTAG connector (J2)		Default		Default

© 2022 Renesas Electronics

Downloaded from Arrow.com.

DA14531 SMARTBOND TINY™ MODULE Signals	J1 connector Daughterboard	Function 1	Function 2	Function 3	Comments for functions supported		
P0_5				URX (2-wire) on JTAG connector (J2)			R36
	MB2_5		RxTx (1-wire UART)			Default	
	MB0_5	URx (4-wire UART)			Default		
P0_6		SW1 (User button)	UTx (2-wire) on JTAG connector (J2)	MikroBUS™ SCK	R7, SW1	R35	R13
	MB2_6						
	MB0_4	UTx (4-wire UART)			Default		
P0_7			MikroBUS™ RST	MikroBUS™ INT		R10	Default
	MB2_7						
	MB0_7	URTS (4-pin UART)			Default		
P0_8		RED LED (D1)	MikroBUS™ CS	MikroBUS™ SCL	D1, R1, R39 or J5	R11	Default
	MB2_8						
	MB0_6	UCTS (4-pin UART)			Default		
P0_9		GREEN LED (D2)	MikroBUS™ MOSI		Default	R16	
	MB2_9						
P0_10	MB3_0						
	SWDIO		SWDIO JTAG connector (J2)			Default	
P0_11		SW2 (User button)	MikroBUS™ MISO	MikroBUS™ SDA	Default	R14	Default
	MB3_1						

© 2022 Renesas Electronics

Downloaded from Arrow.com.

5.9 Programming and debugging interface setup

On this section the settings required for configurating the PRO-MB development kit for DA14531 SMARTBOND TINY™ MODULE are described:

- DA14531 SMARTBOND TINY™ MODULE DB
- DA145xx DEVKT-P PRO-MB

Configurations applied by adding/removing jumpers on the DA145xx DEVKT-P PRO-MB. No modification is required on the DA14531 SMARTBOND TINY™ MODULE DB.

Please notice that the SPI flash on DA145xx DEVKT-P PRO-MB will not be used as DA14531 SMARTBOND TINY™ MODULE has integrated QSPI Flash. See Table 6.

The settings of three configurations are presented:

- Configuration 1: Single wire UART, JTAG and RESET
- Configuration 2: UART (2 wires), JTAG and RESET
- Configuration 3: Full UART, JTAG and RESET

Table 6: Power, SPI Flash and programming/debugging jumper setup of DA145xx DEVKT-P PRO-MB for TINY™ MODULE

Device		Configuration	Setting	Comments
DA145xx DEVKT-P PRO-MB	SPI Data Flash	Use SPI Data Flash of DA14531 SMARTBOND TINY™ MODULE	Remove J1: 1-2 J1: 3-4 J1: 5-6 J1: 7-8 J1: 9-10	Remove jumpers from J1 connector that enable PRO-MB SPI Data Flash
	Voltage provided to DA14531 (VLDO)		J9:1-2 J9:3-4	Current sense circuit of PRO-MB
		1.8V	J5:1-3	Default voltage for TINY™ MODULE
		3.0V	**J5:2-4**	
		3.3V	J5:1-3	
			J5:2-4	
	DA14531 DCDC configuration	Buck	J4:3-4	Power mode of TINY™ MODULE
	Programming/debugging interface	Single wire UART	J1:19-20 J10:1-J1:15 J10:2-J1:17	
		2-wire UART	J1:15-16 J1:17-18	
		4 wire UART	J1:11-12 J1:13-14 J1:15-16 J1:17-18	

© 2022 Renesas Electronics

Downloaded from Arrow.com.

Device		Configuration	Setting	Comments
		JTAG	J1:21-22 J1:23-24	
		RESET	J1:25-26	

5.9.1 Single wire UART, JTAG, RESET

Table 7: Pin assignment for DA14531 SMARTBOND TINY™ MODULE Configuration 1

Configuration		P0_0	P0_2	P0_5	P0_10
1	JTAG & single UART	Reset	SWLCK	RxTx	SWDIO

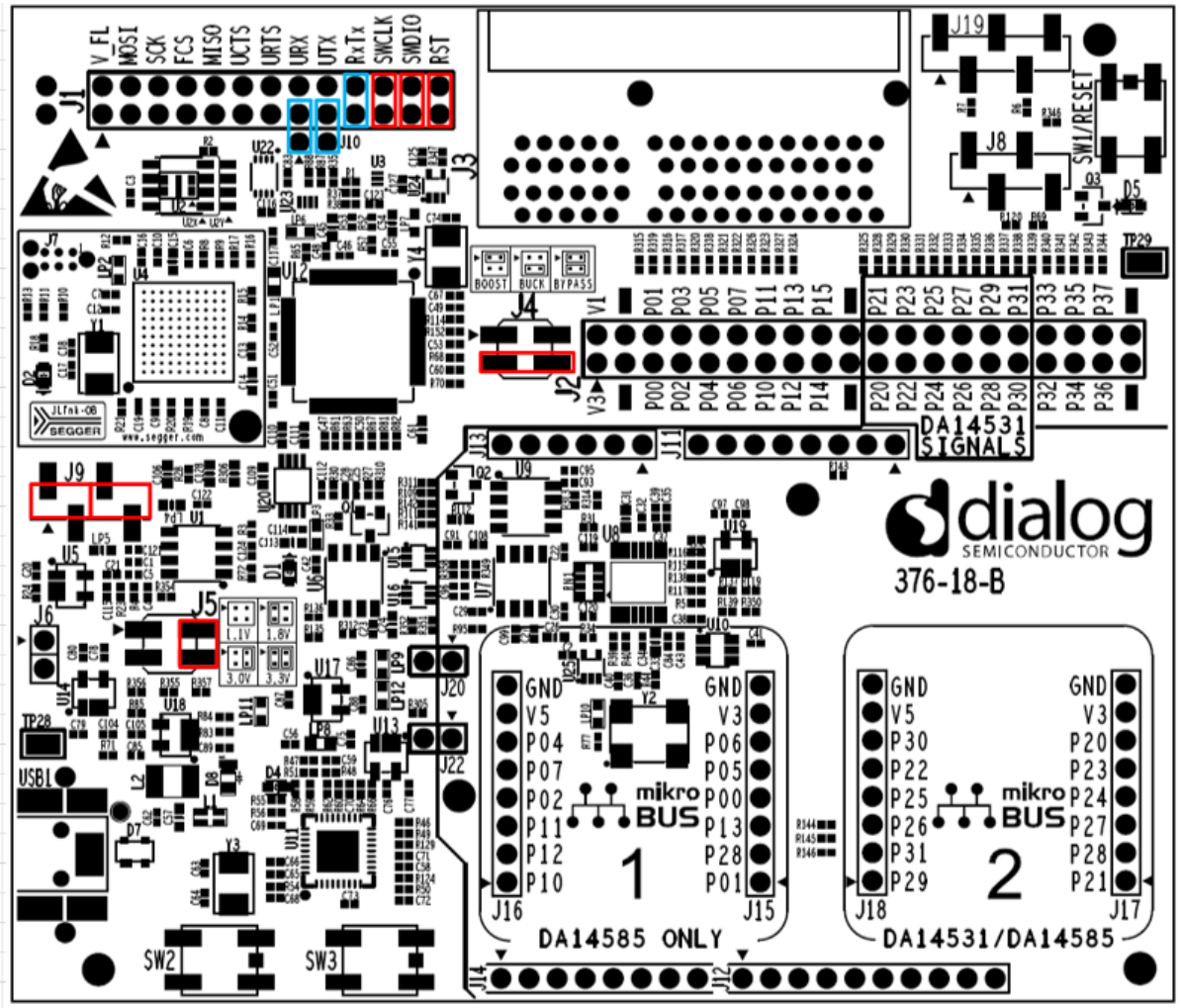

Figure 20: DA145xx DEVKT-P PRO-MB jumper setup for Single wire UART, JTAG and RESET operation

© 2022 Renesas Electronics

Downloaded from Arrow.com.

5.9.2 2-wire UART, JTAG, RESET

Table 8: Pin assignment for DA14531 SMARTBOND TINY™ MODULE configuration 2

Configuration		P0_0	P0_2	P0_6	P0_5	P0_10
2	JTAG & 2 wire UART	Reset	SWLCK	Tx	Rx	SWDIO

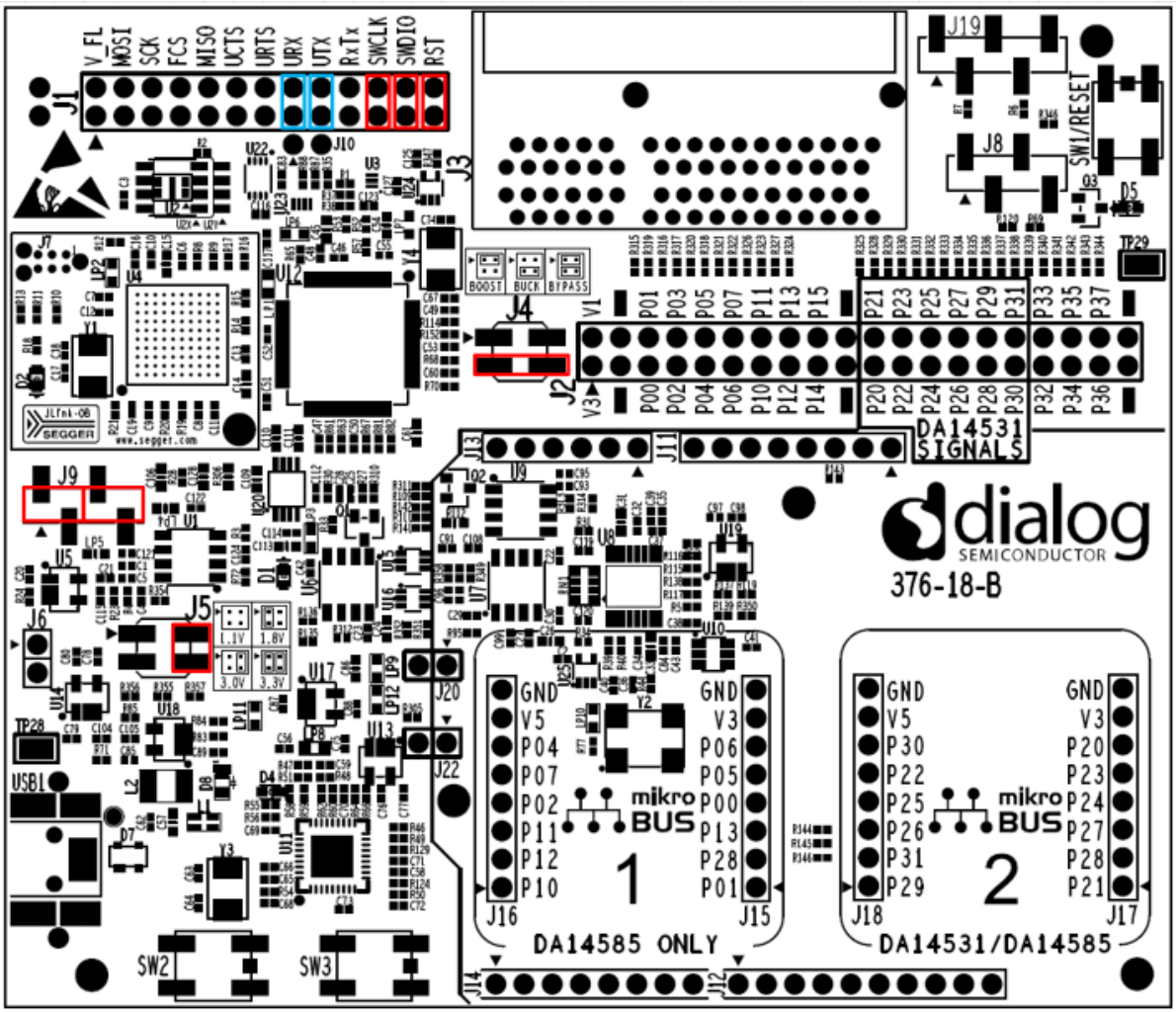

Figure 21: DA145xx DEVKT-P PRO-MB jumper setup for 2-wire UART, JTAG and RESET operation

5.9.3 4-wire UART, JTAG, RESET

Table 9: Pin assignment for DA14531 SMARTBOND TINY™ MODULE configuration 3

Configuration		P0_0	P0_2	P0_6	P0_5	P0_7	P0_8	P0_10
3	JTAG & 2 wire UART	Reset	SWLCK	Tx	Rx	RTS	CTS	SWDIO

© 2022 Renesas Electronics

Downloaded from Arrow.com.

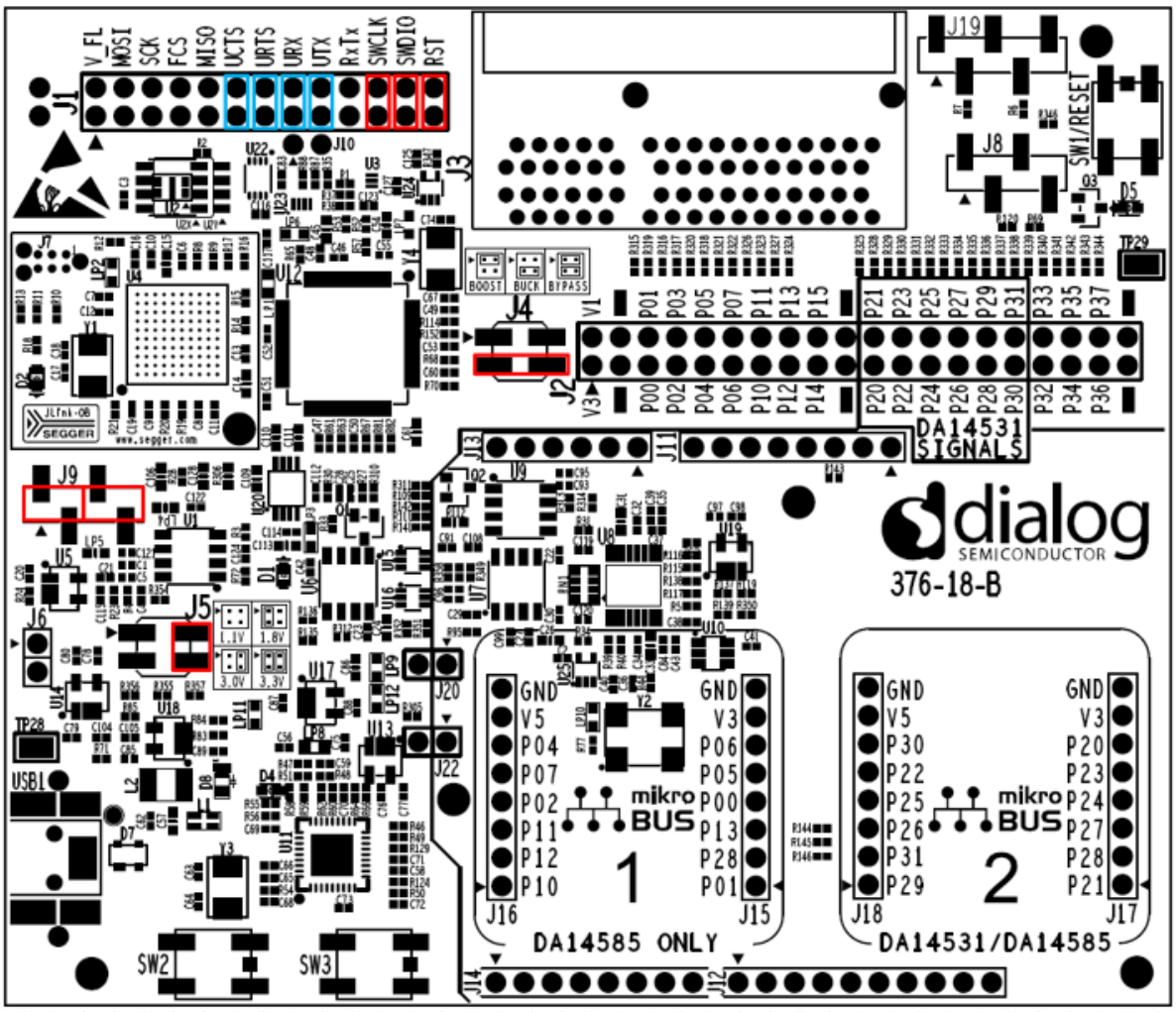

Figure 22: DA145xx DEVKT-P PRO-MB jumper setup for 4-wire UART, JTAG and RESET operation

© 2022 Renesas Electronics

Downloaded from Arrow.com.

5.10 First Steps with DA14531 SMARTBOND TINY™ MODULE DEVKIT

The DA145xx DEVKT-P PRO-MB as well as DA14531 SMARTBOND TINY™ MODULE DB come in with a pre-defined default configuration. The initial steps that must be taken when the Daughterboard is mounted on the PRO-MB are depicted in Figure 23.

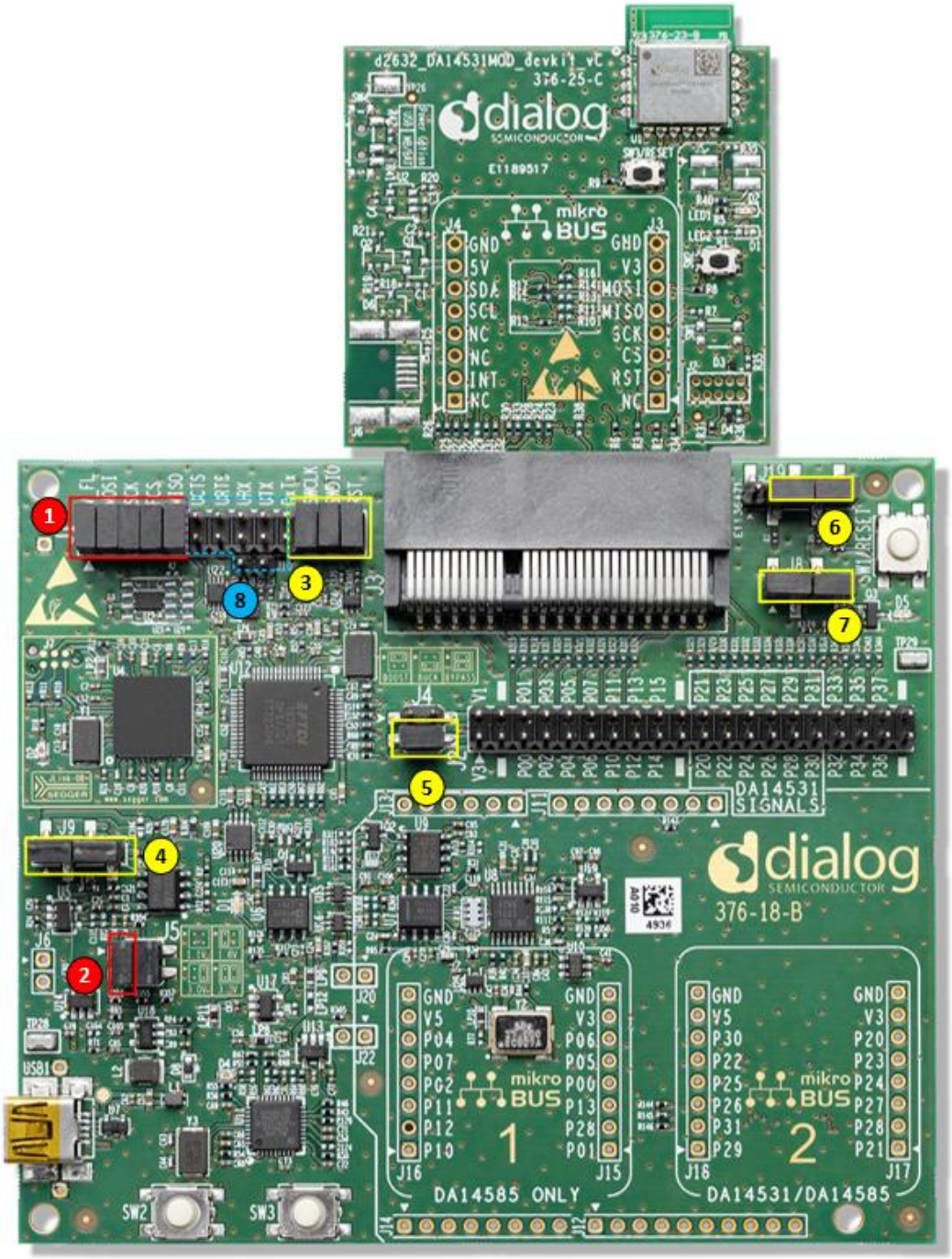

Figure 23: DA145xx DEVKT-P PRO-MB First Steps Jumper Configuration with DA14531 SMARTBOND TINY™ MODULE DB attached

Steps to be followed:

1. Remove SPI Data Flash Jumpers J1 1:2, 3:4, 5:6, 7:8, 9:10
2. Remove J5 1:3 header (LDO(U5) output at 3.0V)

© 2022 Renesas Electronics

Downloaded from Arrow.com.

3. Leave J1 21:22, 23:24, 25:26 for RESET, JTAG
4. Leave J9 1:2,3:4 (current measurement circuit)
5. Leave J4 3:4 (Buck mode)
6. Leave J8 as is (in case a MikroBUS™ module is used J8 is advised to be removed)
7. Leave J19 as is (in case a MikroBUS™ module is used J19 2:3 is advised to be removed)
8. Configure UART operation as per configuration 1, 2 or 3

6 Known Issues

6.1 Keil JTAG default Clock Speed

When trying to program DA14531 SMARTBOND TINY™ MODULE using Keil the following error may occur when the user tries to open the debugger session (Figure 24).

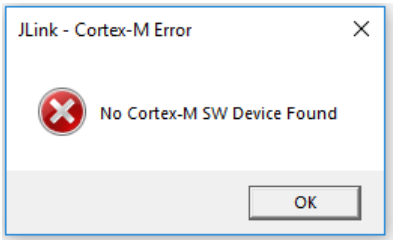

Figure 24: Keil reporting error when try to open debugger session

User must lower the JTAG clock speed to 2MHz following the steps depicted in Figure 25.

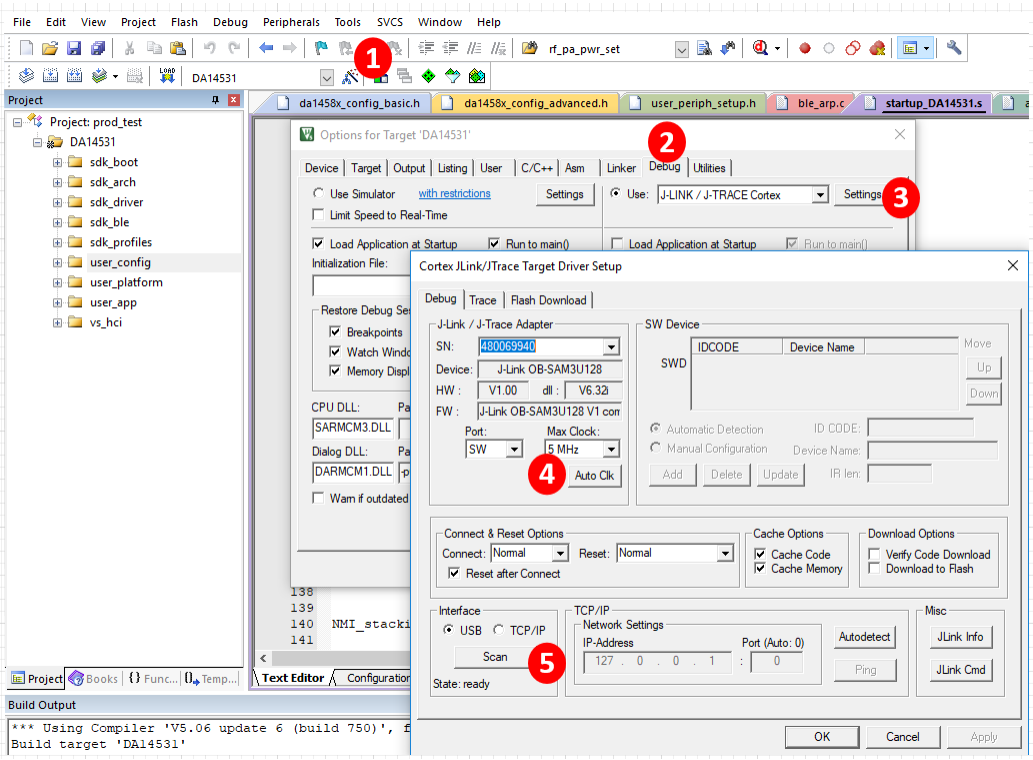

Figure 25: Steps to set up JTAG clock speed

Steps to be followed:

1. Open options for Target device

© 2022 Renesas Electronics

Downloaded from Arrow.com.

2. Choose Debug Tab
3. Press settings for J-Link/ J-TRACE Cortex
4. Change default max clock speed from 5MHz to 2MHz
5. Press Scan to detect the ARM Core

© 2022 Renesas Electronics

Downloaded from Arrow.com.

Appendix A

A.1 Schematic

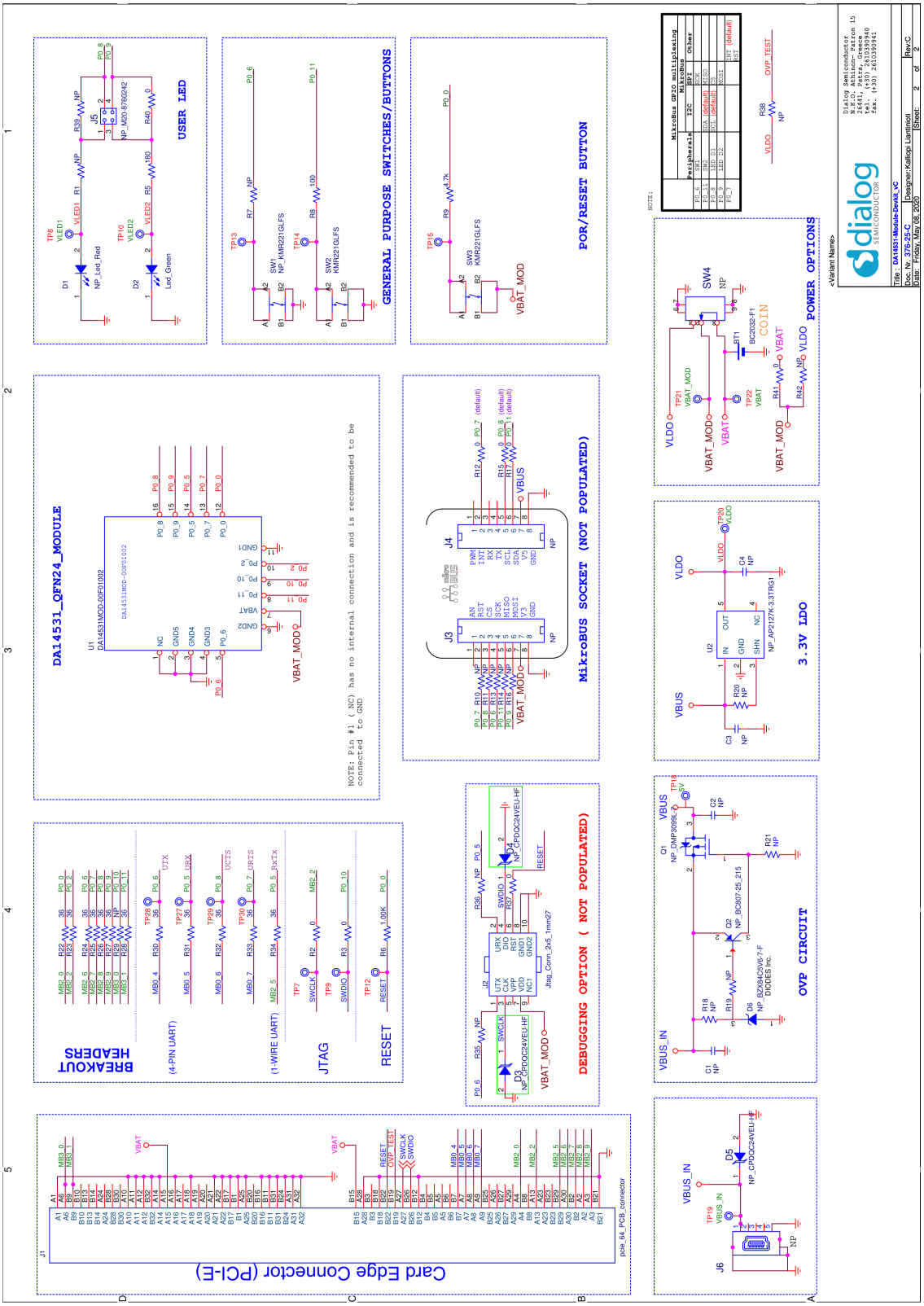

Figure 26: Schematic of DA14531 SMARTBOND TINY™ MODULE DB [376-25-C]

© 2022 Renesas Electronics

Downloaded from Arrow.com.

A.2 Placed Components

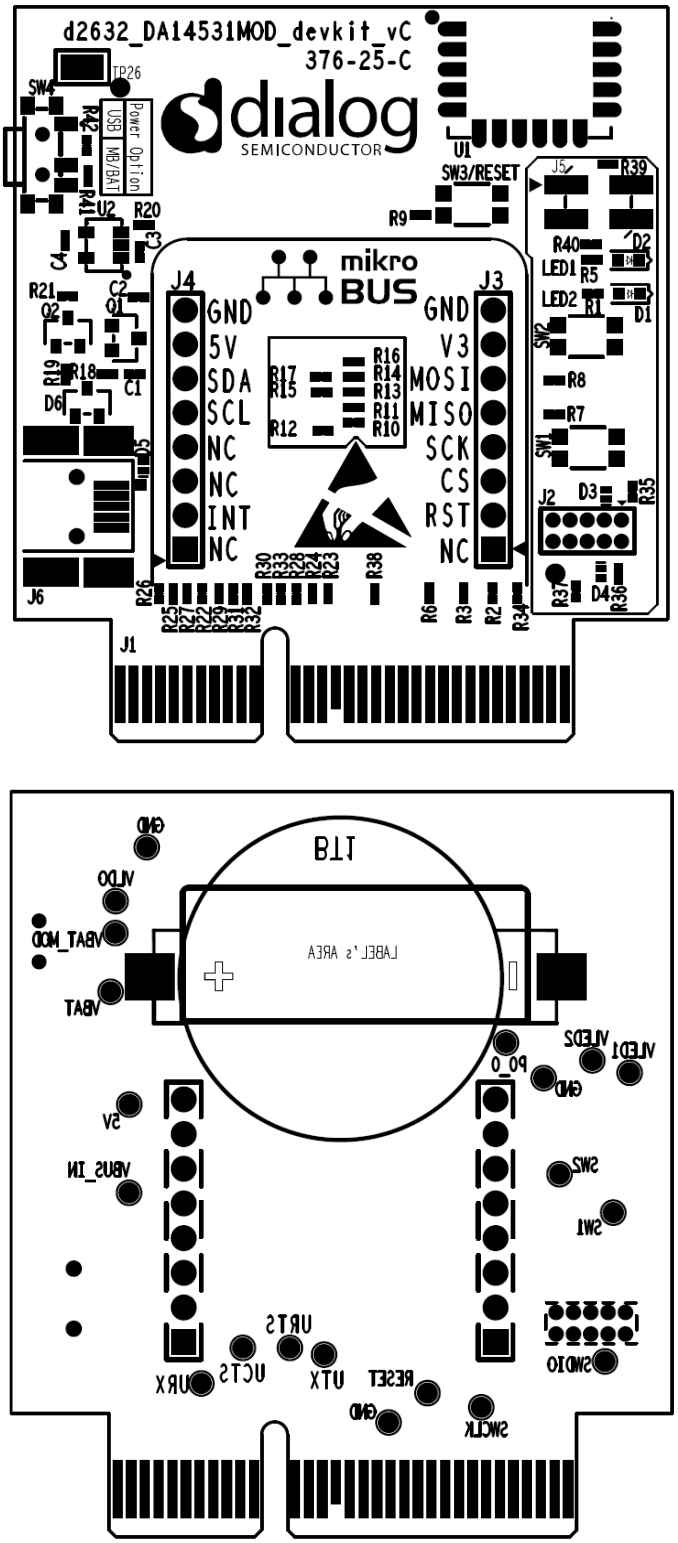

Figure 27: Components on top and bottom sides for DA14531 SMARTBOND TINY™ MODULE DB [376-25-C]

© 2022 Renesas Electronics

Downloaded from Arrow.com.

Revision History

Revision	Date	Description
1.3	22-02-2022	Updated logo, disclaimer, copyright.
1.2	07-06-2021	Corrected Figure 5 MikroBUS™ Section SCL pin assignment
1.1	11-05-2020	Chapter 6 with Known Issues added.
1.0	10-04-2020	Initial version.

© 2022 Renesas Electronics

Downloaded from Arrow.com.

Status Definitions

Status	Definition
DRAFT	The content of this document is under review and subject to formal approval, which may result in modifications or additions.
APPROVED or unmarked	The content of this document has been approved for publication.

RoHS Compliance

Dialog Semiconductor's suppliers certify that its products are in compliance with the requirements of Directive 2011/65/EU of the European Parliament on the restriction of the use of certain hazardous substances in electrical and electronic equipment. RoHS certificates from our suppliers are available on request.

© 2022 Renesas Electronics

Downloaded from Arrow.com.