DRW NO.	SH	REV
C-564-0508-000	1	A

ZONE	REV	SCR NUMBER	DESCRIPTION	BY	DATE	APPROVED
ALL	A	DSMH-845KTZ.VER01	NEW RELEASE	HCL-MH	04/12/2010	D.SMITH

TABLE 1

	GROUNDED (2)	UNGROUNDED
FHS	Ø3.48 - 3.63	Ø3.48 - 3.63
PAD	Ø6.5	N/A
PLATED	YES	NO
DRILL (mm)	3.66 mm	3.57 mm
DRILL (in)	0.144 "	0.1405"

TABLE 2

SCREW P/N	DESCRIPTION	BOARD THICKNESS
577-0014-000	#2-56 X 0.375" LG. PHILIPS PANHEAD W/SQ CONICAL WASHER	1.60 - 5.00 mm
577-0015-000	#2-56 X 0.5" LG. PHILIPS PANHEAD W/SQ CONICAL WASHER	5.00 - 8.00 mm
577-0016-000	#2-56 X 0.625" LG. PHILIPS PANHEAD W/SQ CONICAL WASHER	8.00 - 10.00 mm

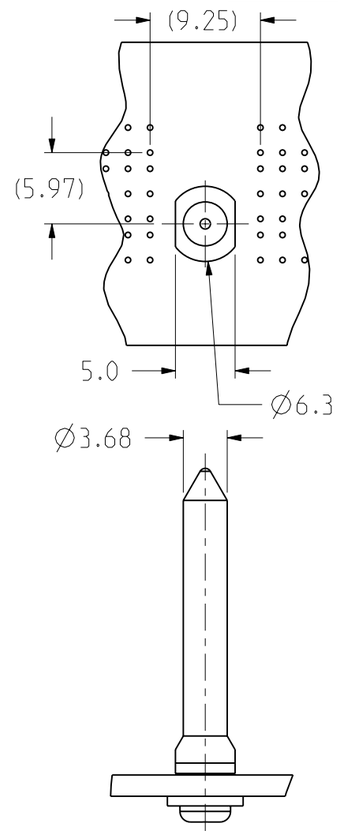

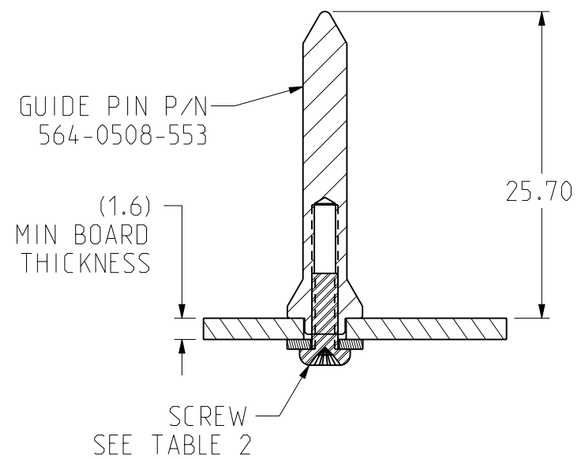

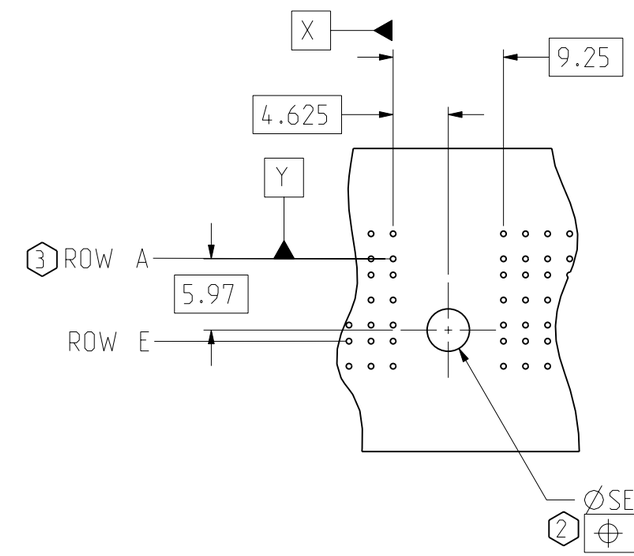

RECOMMENDED BP
HOLE LAYOUT
2 PAIR

(3) REFER TO BP CUSTOMER USE DRAWINGS FOR ROW AND COLUMN ASSIGNMENTS.

(2) PLATED THRU HOLE TO CONNECT TO CHASSIS FOR GROUNDED GUIDE MODULE OPTION. SEE TB-2090 FOR ROUTING GUIDELINES.

1. REFER TO TB-2085 FOR GbX PRODUCT SPECIFICATIONS.

NOTES:

TOLERANCES	
0.0	±0.25
0.00	±0.13
0.000	± -
ANGLES	± 3°

DESIGN 05/12/04 R.CHIFFY
DRAWN 05/18/04 R.CHIFFY
CHK 04/12/2010 J.DUNHAM
APVD 04/12/2010 T.COHEN

UNLESS OTHERWISE SPECIFIED DIMENSIONS ARE IN MM,DECIMAL MAKER IS PERIOD

INTERPRET PER ASME Y14.5M

CODE IDENT 31413

CUSTOMER USE DRAWING

Amphenol TCS
A Division of Amphenol Corporation
200 Innovative Way, Nashua, NH 03062 603.879.3000

TITLE STANDALONE, GUIDE PIN, Ø3.68MM 2 PAIR GbX

PART NO.	REV
564-0508-553	N/A
DRAWING NO. C-564-0508-000	REV A
ProeASSEM P1034-CU-GUIDE-REAL-SEPERATED C-564-0508-000 .dwg	1.12 A.2

SIZE B | SCALE 2/1 | SHEET 1 OF 1

DRW NO. C-564-0508-000 | SH 1 | REV A

Downloaded from Arrow.com.