REVISIONS		
LTR	DESCRIPTION	DATE
A	INITIAL RELEASE #8113-17	----
B	(CL 11) SEE CHANGE NOTICE ECN: 21299-4	1/4/90
C	(CL 11) ADDED -10 THRU -15 RLSE: 60094-13	3/2/94
D	(CL 11) ADDED NOTE 5 & FLAG ECN:29019	6/22/95
E	(CL 11) 9-7894 WAS 9-3825 ECN: A8557	11/20/09
F	(CL 11) SEE CHG NOTICE ECN: B7054-0000	3/11/14
G	(CL 11) CHG'D NOTE 1 ECN: B8394-0000	4/29/14

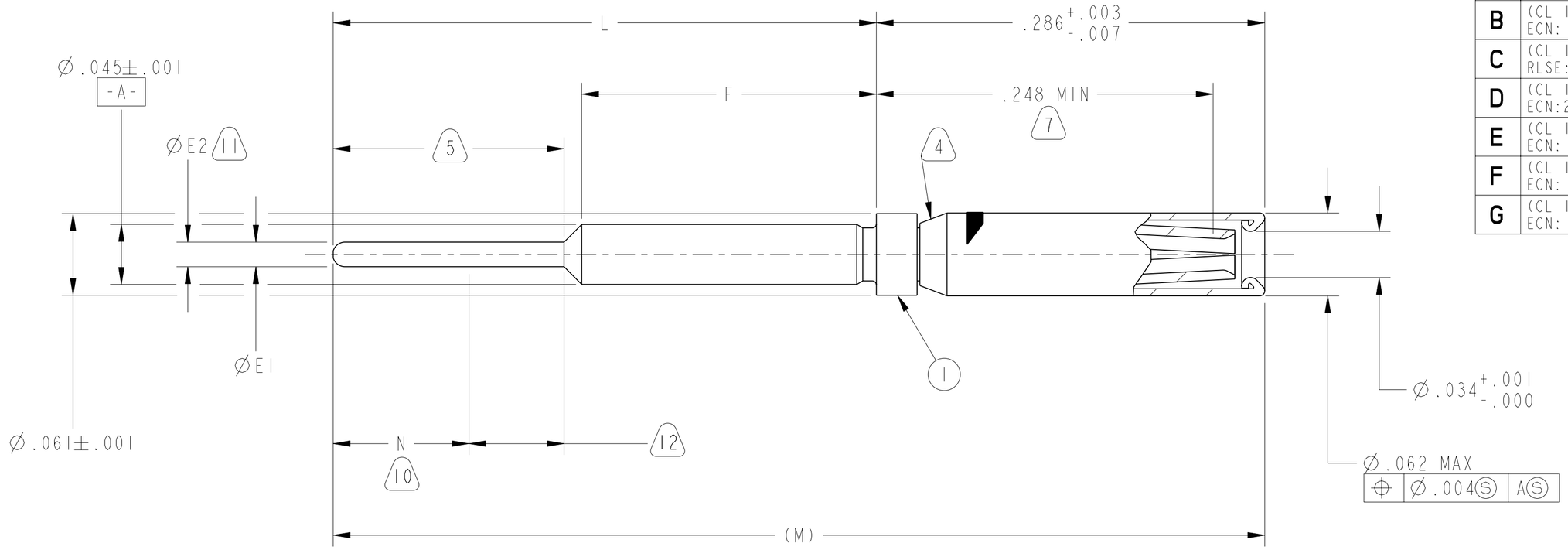

9. REMOVED ON ECN 21299-4, REV B.

8. MEETS THE ENGAGEMENT & SEPARATION FORCE REQUIREMENTS OF AS39029/57-354.

7. INDICATED DIMENSION TO BE FROM REAR OF SHOULDER TO POINT OF ENGAGEMENT OF SOCKET AND A .0300±.0002 DIA SQUARE END PIN.

6. MEETS THE APPLICABLE REQUIREMENTS OF AS39029/57-354.

5. INDICATED AREA SHALL BE CAPABLE OF MEETING THE SOLDERABILITY REQUIREMENTS OF MIL-STD-202, METHOD 208.

4. SLEEVE SHALL BE TIGHTLY CRIMPED TO THE CONTACT BODY.

3. SEE PARTS LIST FOR OPTION #1 CONTACT FINISH SUFFIX CHARACTER.

2. ALL DIMENSIONS ARE AFTER PLATING, EXCEPT AS NOTED.

1. ADD SUFFIX CHARACTER FOR FINISH:

SUFFIX CHARACTER	FINISH
2	GOLD PLATE 9-6800-2
3	GOLD PLATE 9-6800-3
4	GOLD PLATE 9-6800-4
5	GOLD PLATE PER AS39029 APPLICABLE REQUIREMENTS
F	GOLD PLATE 9-6800-F
H	GOLD PLATE 9-6800-H

12. SOLDER ON INDICATED AREA PERMISSIBLE.

11. DIMENSION APPLIES AFTER PRETINNING.

10. INDICATED AREA IS PRETINNED WITH SN60 OR SN63 SOLDER PER J-STD-006.

NOTES:

THE USE OF THIS DOCUMENT IS UNLIMITED. HOWEVER, DOCUMENTS REFERENCED HEREON MAY CONTAIN LIMITED RIGHTS DATA.

N/A
NEXT ASSEMBLY

PRO/ENGINEER INFORMATION
Pro/e Model Used: 10-497583.ASSEM
Drawing Name: 10-497583

UNLESS OTHERWISE SPECIFIED
LINEAR DIMENSIONS ARE IN INCHES
TOLERANCES:
.XXXX = ±.0005 ANGLES= ±2°
.XXX = ±.010
.XX = ±.03
.X = ±.1
DIM.& TOL. PER ASME Y14.5M;
DRM PER MIL-DTL-31000;
OTHER Amphenol Stds. PER 9-3800
LEGENDS:
=FLAG NOTE CALL OUT
REFERENCE ONLY

SPECIFICATIONS
MATERIAL SPEC.
N/A
PROCESS SPEC.
N/A

POS	QTY	PART NUMBER	DESCRIPTION	NOTE
1	1	SEE TABLE	CONTACT	

PARTS LIST

APPROVALS		DATE
PREPARED BY	E.PLACE	7-Mar-14
ENGINEER IN CHARGE	LRATCHFORD	
DESIGN MANAGER	E.SHEPLER	
DESIGN ACTIVITY GROUP	MIL AERO	

THIRD ANGLE PROJECTION

AMPHENOL CORPORATION
40-60 DELAWARE AVENUE
SIDNEY, N.Y. 13838

CONTACT, SOCKET,
ELECTRICAL CONNECTOR,
SIZE 22M, PCB, TYPE JT-R, PRETINNED

SIZE	CAGE CODE	DOCUMENT NO.	REV.
C	77820	10-497583	G

SCALE: 10.0 REF. 10-407553 SHEET 1 OF 2

IMAGED / Apr . 30 2014, 2:05:07 PM
Downloaded from Arrow.com.

PART NUMBER	OPTION #1 CONTACT	OPTION #2 CONTACT	ØE1 ±.001	ØE2 +.002 -.001	F +.000 -.015	L	M REF	N MIN
10-497583-01()	10-597777-01()	10-497820-01()	.019	.019	.376	$.865^{+.000}_{-.015}$	1.151	.100
10-497583-02()	10-597777-02()	10-497820-02()	.019	.019	.486	1.048±.003	1.334	.100
10-497583-03()	10-597777-03()	10-497820-03()	.019	.019	.280	.782±.005	1.068	.100
10-497583-04()	10-597777-04()	10-497820-04()	.019	.019	.376	$.642^{+.000}_{-.015}$	.928	.100
10-497583-05()	10-597777-05()	10-497820-05()	.019	.019	.376	$.754^{+.000}_{-.015}$	1.040	.100
10-497583-06()	10-597777-06()	10-497820-06()	.019	.019	.280	.513±.005	.799	.100
10-497583-07()	10-597777-07()	10-497820-07()	.019	.019	.355	.500±.005	.786	.100
10-497583-08()	10-597777-08()	10-497820-08()	.019	.019	.280	.585±.005	.871	.100
10-497583-09()	10-597777-09()	10-497820-09()	.019	.019	.240	.390±.003	.676	.100
10-497583-10()	10-597777-10()	10-497820-10()	.019	.019	.376	1.138±.007	1.424	.100
10-497583-11()	10-597777-11()	10-497820-11()	.019	.019	.375±.010	.547 REF	$.833^{+.006}_{-.010}$	.100
10-497583-12()	10-597777-12()	10-497820-12()	.019	.019	.460	$.676^{+.000}_{-.015}$	.962	.100
10-497583-13()	10-597777-13()	10-497820-13()	.019	.019	.376	.747±.005	1.033	.100
10-497583-14()	10-597777-14()	10-497820-14()	.019	.019	.280	.523±.005	.809	.100
10-497583-15()	10-597777-15()	10-497820-15()	.019	.019	1.207	1.412±.003	1.698	.100
10-497583-16()	10-597777-16()	10-497820-16()	.019	.019	.650	1.048±.003	1.334	.345
10-497583-17()	10-597777-17()	10-497820-17()	.019	.019	.376	.736±.005	1.022	.310
10-497583-18()	10-597777-18()	10-497820-18()	.019	.019	.280	.629±.005	.915	.300
10-497583-19()	10-597777-19()	10-497820-19()	.019	.019	.280	.819±.005	1.105	.490
10-497583-20()	10-597777-20()	10-497820-20()	.019	.019	.376	1.000±.005	1.286	.575
10-497583-21()	10-597777-21()	10-497820-21()	.019	.019	.376	.964±.005	1.250	.540
10-497583-22()	10-597777-22()	10-497820-22()	.019	.019	.280	.715±.005	1.001	.385
10-497583-23()	10-597777-23()	10-497820-23()	.019	.019	.224±.003	.560±.005	.846	.285
10-497583-24()	10-597777-24()	10-497820-24()	.019	.019	.224±.003	.810±.005	1.096	.535
10-497583-25()	10-597777-25()	10-497820-25()	.019	.019	.224±.003	.736±.005	1.022	.460
10-497583-26()	10-597777-26()	10-497820-26()	.019	.019	.495±.003	.736±.005	1.022	.190
10-497583-27()	10-597777-27()	10-497820-27()	.019	.019	.224±.003	.428±.005	.714	.155
10-497583-28()	10-597777-28()	10-497820-28()	.019	.019	.650±.005	1.068±.005	1.354	.365
10-497583-29()	10-597777-29()	10-497820-29()	.019	.019	.224±.003	.463±.005	.749	.190

1 3 1

NOTES: SEE SHT 1

THE USE OF THIS DOCUMENT IS UNLIMITED.
HOWEVER, DOCUMENTS REFERENCED HEREON
MAY CONTAIN LIMITED RIGHTS DATA.

IMAGED / Apr . 30 2014, 2:05:07 PM

Downloaded from Arrow.com.