Data Sheet

AD5124/AD5144/AD5144A

Quad Channel, 128-/256-Position, I²C/SPI, Nonvolatile Digital Potentiometer

FEATURES

- 10 kΩ and 100 kΩ resistance options
- Resistor tolerance: 8% maximum
- Wiper current: ±6 mA
- Low temperature coefficient: 35 ppm/°C
- Wide bandwidth: 3 MHz
- Fast start-up time < 75 µs
- Linear gain setting mode
- Single- and dual-supply operation
- Independent logic supply: 1.8 V to 5.5 V
- Wide operating temperature: −40°C to +125°C
- 4 mm × 4 mm package option

APPLICATIONS

- Portable electronics level adjustment
- LCD panel brightness and contrast controls
- Programmable filters, delays, and time constants
- Programmable power supplies

FUNCTIONAL BLOCK DIAGRAM

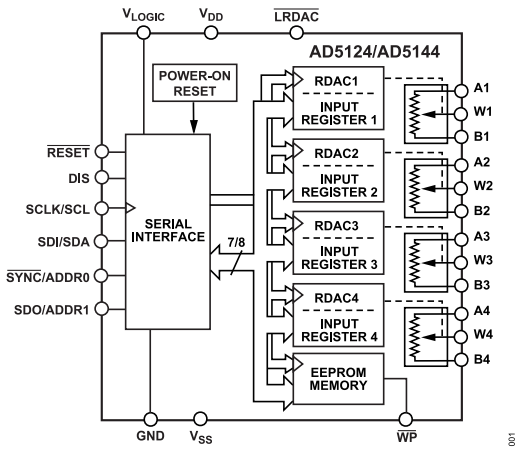

Figure 1. AD5124/AD5144 24-Lead LFCSP

GENERAL DESCRIPTION

The AD5124/AD5144/AD5144A potentiometers provide a nonvolatile solution for 128-/256-position adjustment applications, offering guaranteed low resistor tolerance errors of ±8% and supporting currents up to ±6 mA at the Ax, Bx, and Wx pins.

The low resistor tolerance and low nominal temperature coefficient simplify open-loop applications as well as applications requiring tolerance matching.

The linear gain setting mode allows independent programming of the resistance between the digital potentiometer terminals, through the R_{AW} and R_{WB} string resistors, allowing very accurate resistor matching.

The high bandwidth and low total harmonic distortion (THD) ensure optimal performance for ac signals, making these devices suitable for filter design.

The low wiper resistance of only 40 Ω at the ends of the resistor array allow for pin-to-pin connection.

The wiper values can be set through an SPI-/I²C-compatible digital interface that is also used to read back the wiper register and EEPROM contents.

The AD5124/AD5144/AD5144A are available in a compact, 24-lead, 4 mm × 4 mm LFCSP and a 20-lead TSSOP. The parts are guaranteed to operate over the extended industrial temperature range of −40°C to +125°C.

Table 1. Family Models

Model	Channel	Position	Interface	Package
AD5123[1]	Quad	128	I²C	LFCSP
AD5124	Quad	128	SPI/I²C	LFCSP
AD5124	Quad	128	SPI	TSSOP
AD5143[1]	Quad	256	I²C	LFCSP
AD5144	Quad	256	SPI/I²C	LFCSP
AD5144	Quad	256	SPI	TSSOP
AD5144A	Quad	256	I²C	TSSOP
AD5122	Dual	128	SPI	LFCSP/TSSOP
AD5122A	Dual	128	I²C	LFCSP/TSSOP
AD5142	Dual	256	SPI	LFCSP/TSSOP
AD5142A	Dual	256	I²C	LFCSP/TSSOP
AD5121	Single	128	SPI/I²C	LFCSP
AD5141	Single	256	SPI/I²C	LFCSP

[1] Two potentiometers and two rheostats.

One Analog Way, Wilmington, MA 01887-2356, U.S.A. | Tel: 781.935.5565 |
©2012-2026 Analog Devices, Inc. All rights reserved.

Downloaded from Arrow.com.

TABLE OF CONTENTS

Features ... 1
Applications ... 1
Functional Block Diagram ... 1
General Description ... 1
Functional Block Diagrams—TSSOP ... 3
Specifications ... 4
  Electrical Characteristics—AD5124 ... 4
  Electrical Characteristics—AD5144 and AD5144A ... 7
  Interface Timing Specifications ... 10
  Shift Register and Timing Diagrams ... 12
Absolute Maximum Ratings ... 14
  Thermal Resistance ... 14
  Electrostatic Discharge (ESD) Ratings ... 14
  ESD Ratings for AD5124/AD5144/AD5144A ... 14
  ESD Caution ... 14
Pin Configurations and Function Descriptions ... 15
Typical Performance Characteristics ... 18
Test Circuits ... 23
Theory of Operation ... 24
  RDAC Register and EEPROM ... 24
  Input Shift Register ... 24
  Serial Data Digital Interface Selection, DIS ... 25
  SPI Serial Data Interface ... 25
  I^2C Serial Data Interface ... 27
  Advanced Control Modes ... 30
  EEPROM or RDAC Register Protection ... 33
  Load RDAC Input Register ($\overline{LRDAC}$) ... 33
  RDAC Architecture ... 33
  Programming the Variable Resistor ... 34
  Programming the Potentiometer Divider ... 34
  Terminal Voltage Operating Range ... 35
  Power-Up Sequence ... 35
  Layout and Power Supply Biasing ... 35
Outline Dimensions ... 36
  Ordering Guide ... 36
  R_{AB} (kΩ), Resolution, and Interface Options ... 36
  Evaluation Boards ... 37

REVISION HISTORY

9/2026—Rev. E to Rev. F

Changes to General Description Section ... 1
Changes to Theory of Operation Section ... 24
Changes to RDAC Register and EEPROM Section ... 24
Change to Table 13 Title ... 24
Change to Serial Data Digital Interface Selection, DIS Section ... 25
Changes to Table 17 Title ... 30
Changes to Rheostat Operation—±8% Resistor Tolerance Section ... 34

7/2024—Rev. D to Rev. E

Changed Master to Controller and Slave to Target (Throughout) ... 1
Changes to Thermal Resistance Section and Table 8 ... 14

5/2022—Rev. C to Rev. D

Changes to Nominal Resistance Match Parameter, Single-Supply Power Range Parameter, Dual-Supply Power Range Parameter, and Logic Supply Range Parameter, Table 2 ... 4
Changes to Nominal Resistance Match Parameter, Single-Supply Power Range Parameter, Dual-Supply Power Range Parameter, and Logic Supply Range Parameter, Table 3 ... 7
Deleted FICDM Parameter, Table 7 ... 14
Added Electrostatic Discharge Ratings Section ... 14
Added ESD Ratings for AD5124/AD5144/AD5144A Section and Table 9; Renumbered Sequentially ... 14
Moved Table 13 and Table 14 ... 24
Added Write Operation Section, Figure 46, and Figure 47; Renumbered Sequentially ... 27
Added EEPROM Write Acknowledge Polling Section ... 29
Added Read Operation Section and Figure 48 ... 29
Moved Table 17, Table 18, and Table 19 ... 30
Added R_{AB} (kΩ), Resolution, and Interface Options Section ... 36

Downloaded from Arrow.com.

FUNCTIONAL BLOCK DIAGRAMS—TSSOP

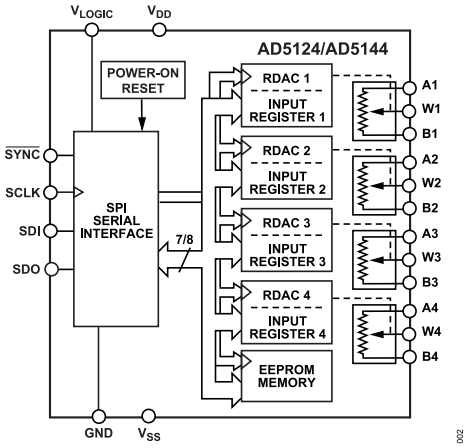

Figure 2. AD5124/AD5144 20-Lead TSSOP

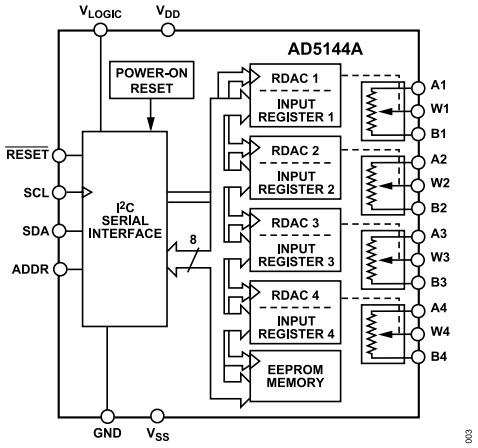

Figure 3. AD5144A 20-Lead TSSOP

Downloaded from Arrow.com.

SPECIFICATIONS

ELECTRICAL CHARACTERISTICS—AD5124

V_{DD} = 2.3 V to 5.5 V, V_{SS} = 0 V; V_{DD} = 2.25 V to 2.75 V, V_{SS} = −2.25 V to −2.75 V; V_{LOGIC} = 1.8 V to 5.5 V, −40°C < T_A < +125°C, unless otherwise noted.

Table 2.

Parameter	Symbol	Test Conditions/Comments	Min	Typ[1]	Max	Unit
DC CHARACTERISTICS—RHEOSTAT MODE (ALL RDACs)						
Resolution	N		7			Bits
Resistor Integral Nonlinearity[2]	R-INL	R_{AB} = 10 kΩ				
		V_{DD} ≥ 2.7 V	−1	±0.1	+1	LSB
		V_{DD} < 2.7 V	−2.5	±1	+2.5	LSB
		R_{AB} = 100 kΩ				
		V_{DD} ≥ 2.7 V	−0.5	±0.1	+0.5	LSB
		V_{DD} < 2.7 V	−1	±0.25	+1	LSB
Resistor Differential Nonlinearity[2]	R-DNL		−0.5	±0.1	+0.5	LSB
Nominal Resistor Tolerance	$\Delta R_{AB}/R_{AB}$		−8	±1	+8	%
Resistance Temperature Coefficient[3]	$(\Delta R_{AB}/R_{AB})/\Delta T \times 10^6$	Code = full scale		35		ppm/°C
Wiper Resistance[3]	R_W	Code = zero scale				
		R_{AB} = 10 kΩ		55	125	Ω
		R_{AB} = 100 kΩ		130	400	Ω
Bottom Scale or Top Scale	R_{BS} or R_{TS}					
		R_{AB} = 10 kΩ		40	80	Ω
		R_{AB} = 100 kΩ		60	230	Ω
Nominal Resistance Match	R_{AB1}/R_{AB2}	Code = full scale	−1	±0.2	+1	%
DC CHARACTERISTICS—POTENTIOMETER DIVIDER MODE (ALL RDACs)						
Integral Nonlinearity[4]	INL					
		R_{AB} = 10 kΩ	−0.5	±0.1	+0.5	LSB
		R_{AB} = 100 kΩ	−0.25	±0.1	+0.25	LSB
Differential Nonlinearity[4]	DNL		−0.25	±0.1	+0.25	LSB
Full-Scale Error	V_{WFSE}					
		R_{AB} = 10 kΩ	−1.5	−0.1		LSB
		R_{AB} = 100 kΩ	−0.5	±0.1	+0.5	LSB
Zero-Scale Error	V_{WZSE}					
		R_{AB} = 10 kΩ		1	1.5	LSB
		R_{AB} = 100 kΩ		0.25	0.5	LSB
Voltage Divider Temperature Coefficient[3]	$(\Delta V_W/V_W)/\Delta T \times 10^6$	Code = half scale		±5		ppm/°C
RESISTOR TERMINALS						
Maximum Continuous Current	I_A, I_B, and I_W					
		R_{AB} = 10 kΩ	−6		+6	mA
		R_{AB} = 100 kΩ	−1.5		+1.5	mA
Terminal Voltage Range[5]			V_{SS}		V_{DD}	V
Capacitance A, Capacitance B[3]	C_A, C_B	f = 1 MHz, measured to GND, code = half scale				
		R_{AB} = 10 kΩ		25		pF
		R_{AB} = 100 kΩ		12		pF
Capacitance W[3]	C_W	f = 1 MHz, measured to GND, code = half scale				
		R_{AB} = 10 kΩ		12		pF
		R_{AB} = 100 kΩ		5		pF

Downloaded from Arrow.com.

SPECIFICATIONS

Table 2. (Continued)

Parameter	Symbol	Test Conditions/Comments	Min	Typ[1]	Max	Unit
Common-Mode Leakage Current[3]		$V_A = V_W = V_B$	−500	±15	+500	nA
DIGITAL INPUTS						
Input Logic[3]						
High	V_{INH}	V_{LOGIC} = 1.8 V to 2.3 V	0.8 × V_{LOGIC}			V
		V_{LOGIC} = 2.3 V to 5.5 V	0.7 × V_{LOGIC}			V
Low	V_{INL}				0.2 × V_{LOGIC}	V
Input Hysteresis[3]	V_{HYST}		0.1 × V_{LOGIC}			V
Input Current[3]	I_{IN}				±1	µA
Input Capacitance[3]	C_{IN}			5		pF
DIGITAL OUTPUTS						
Output High Voltage[3]	V_{OH}	$R_{PULL-UP}$ = 2.2 kΩ to V_{LOGIC}		V_{LOGIC}		V
Output Low Voltage[3]	V_{OL}	I_{SINK} = 3 mA			0.4	V
		I_{SINK} = 6 mA, V_{LOGIC} > 2.3 V			0.6	V
Three-State Leakage Current			−1		+1	µA
Three-State Output Capacitance				2		pF
POWER SUPPLIES						
Single-Supply Power Range	V_{DD}	V_{SS} = GND	2.3		5.5	V
Dual-Supply Power Range	V_{DD}/V_{SS}		±2.25		±2.75	V
Logic Supply Range	V_{LOGIC}	Single supply, V_{SS} = GND	1.8		V_{DD}	V
		Dual supply, V_{SS} < GND	2.25		V_{DD}	V
Positive Supply Current	I_{DD}	$V_{IH} = V_{LOGIC}$ or V_{IL} = GND				
		V_{DD} = 5.5 V		0.7	5.5	µA
		V_{DD} = 2.3 V		400		nA
Negative Supply Current	I_{SS}	$V_{IH} = V_{LOGIC}$ or V_{IL} = GND	−5.5	−0.7		µA
EEPROM Store Current[3, 6]	$I_{DD_EEPROM_STORE}$	$V_{IH} = V_{LOGIC}$ or V_{IL} = GND		2		mA
EEPROM Read Current[3, 7]	$I_{DD_EEPROM_READ}$	$V_{IH} = V_{LOGIC}$ or V_{IL} = GND		320		µA
Logic Supply Current	I_{LOGIC}	$V_{IH} = V_{LOGIC}$ or V_{IL} = GND		0.05	1.4	µA
Power Dissipation[8]	P_{DISS}	$V_{IH} = V_{LOGIC}$ or V_{IL} = GND		3.5		µW
Power Supply Rejection Ratio	PSRR	$\Delta V_{DD}/\Delta V_{SS} = V_{DD}$ ± 10%, code = full scale		−66	−60	dB
DYNAMIC CHARACTERISTICS[9]						
Bandwidth	BW	−3 dB				
		R_{AB} = 10 kΩ		3		MHz
		R_{AB} = 100 kΩ		0.43		MHz
Total Harmonic Distortion	THD	V_{DD}/V_{SS} = ±2.5 V, V_A = 1 V rms, V_B = 0 V, f = 1 kHz				
		R_{AB} = 10 kΩ		−80		dB
		R_{AB} = 100 kΩ		−90		dB
Resistor Noise Density	e_{N_WB}	Code = half scale, T_A = 25°C, f = 10 kHz				
		R_{AB} = 10 kΩ		7		nV/√Hz
		R_{AB} = 100 kΩ		20		nV/√Hz
V_W Settling Time	t_S	V_A = 5 V, V_B = 0 V, from zero scale to full scale, ±0.5 LSB error band				
		R_{AB} = 10 kΩ		2		µs
		R_{AB} = 100 kΩ		12		µs
Crosstalk (C_{W1}/C_{W2})	C_T	R_{AB} = 10 kΩ		10		nV-sec
		R_{AB} = 100 kΩ		25		nV-sec
Analog Crosstalk	C_{TA}			−90		dB

Downloaded from Arrow.com.

SPECIFICATIONS

Table 2. (Continued)

Parameter	Symbol	Test Conditions/Comments	Min	Typ[1]	Max	Unit
Endurance[10]		T_A = 25°C		1		Mcycles
			100			kcycles
Data Retention[11, 12]				50		Years

1 Typical values represent average readings at 25°C, V_{DD} = 5 V, V_{SS} = 0 V, and V_{LOGIC} = 5 V.

2 Resistor integral nonlinearity error (R-INL) is the deviation from an ideal value measured between the maximum resistance and the minimum resistance wiper positions. R-DNL measures the relative step change from ideal between successive tap positions. The maximum wiper current is limited to (0.7 × V_{DD})/R_{AB}.

3 Guaranteed by design and characterization, not subject to production test.

4 INL and DNL are measured at V_{WB} with the RDAC configured as a potentiometer divider similar to a voltage output DAC. V_A = V_{DD} and V_B = 0 V. DNL specification limits of ±1 LSB maximum are guaranteed monotonic operating conditions.

5 Resistor Terminal A, Resistor Terminal B, and Resistor Terminal W have no limitations on polarity with respect to each other. Dual-supply operation enables ground referenced bipolar signal adjustment.

6 Different from operating current; supply current for EEPROM program lasts approximately 30 ms.

7 Different from operating current; supply current for EEPROM read lasts approximately 20 µs.

8 P_{DISS} is calculated from (I_{DD} × V_{DD}) + (I_{LOGIC} × V_{LOGIC}).

9 All dynamic characteristics use V_{DD}/V_{SS} = ±2.5 V, and V_{LOGIC} = 2.5 V.

10 Endurance is qualified to 100,000 cycles per JEDEC Standard 22, Method A117 and measured at −40°C to +125°C.

11 Retention lifetime equivalent at junction temperature (T_J) = 125°C per JEDEC Standard 22, Method A117. Retention lifetime, based on an activation energy of 1 eV, derates with junction temperature in the Flash/EE memory.

12 50 years apply to an endurance of 1000 cycles. An endurance of 100,000 cycles has an equivalent retention lifetime of 5 years.

Downloaded from Arrow.com.

SPECIFICATIONS

ELECTRICAL CHARACTERISTICS—AD5144 AND AD5144A

V_{DD} = 2.3 V to 5.5 V, V_{SS} = 0 V; V_{DD} = 2.25 V to 2.75 V, V_{SS} = −2.25 V to −2.75 V; V_{LOGIC} = 1.8 V to 5.5 V, −40°C < T_A < +125°C, unless otherwise noted.

Table 3.

Parameter	Symbol	Test Conditions/Comments	Min	Typ[1]	Max	Unit
DC CHARACTERISTICS—RHEOSTAT MODE (ALL RDACs)						
Resolution	N		8			Bits
Resistor Integral Nonlinearity[2]	R-INL	R_{AB} = 10 kΩ				
		V_{DD} ≥ 2.7 V	−2	±0.2	+2	LSB
		V_{DD} < 2.7 V	−5	±1.5	+5	LSB
		R_{AB} = 100 kΩ				
		V_{DD} ≥ 2.7 V	−1	±0.1	+1	LSB
		V_{DD} < 2.7 V	−2	±0.5	+2	LSB
Resistor Differential Nonlinearity[2]	R-DNL		−0.5	±0.2	+0.5	LSB
Nominal Resistor Tolerance	$\Delta R_{AB}/R_{AB}$		−8	±1	+8	%
Resistance Temperature Coefficient[3]	$(\Delta R_{AB}/R_{AB})/\Delta T \times 10^6$	Code = full scale		35		ppm/°C
Wiper Resistance[3]	R_W	Code = zero scale				
		R_{AB} = 10 kΩ		55	125	Ω
		R_{AB} = 100 kΩ		130	400	Ω
Bottom Scale or Top Scale	R_{BS} or R_{TS}					
		R_{AB} = 10 kΩ		40	80	Ω
		R_{AB} = 100 kΩ		60	230	Ω
Nominal Resistance Match	R_{AB1}/R_{AB2}	Code = full scale	−1	±0.2	+1	%
DC CHARACTERISTICS—POTENTIOMETER DIVIDER MODE (ALL RDACs)						
Integral Nonlinearity[4]	INL					
		R_{AB} = 10 kΩ	−1	±0.2	+1	LSB
		R_{AB} = 100 kΩ	−0.5	±0.1	+0.5	LSB
Differential Nonlinearity[4]	DNL		−0.5	±0.2	+0.5	LSB
Full-Scale Error	V_{WFSE}					
		R_{AB} = 10 kΩ	−2.5	−0.1		LSB
		R_{AB} = 100 kΩ	−1	±0.2	+1	LSB
Zero-Scale Error	V_{WZSE}					
		R_{AB} = 10 kΩ		1.2	3	LSB
		R_{AB} = 100 kΩ		0.5	1	LSB
Voltage Divider Temperature Coefficient[3]	$(\Delta V_W/V_W)/\Delta T \times 10^6$	Code = half scale		±5		ppm/°C
RESISTOR TERMINALS						
Maximum Continuous Current	I_A, I_B, and I_W					
		R_{AB} = 10 kΩ	−6		+6	mA
		R_{AB} = 100 kΩ	−1.5		+1.5	mA
Terminal Voltage Range[5]			V_{SS}		V_{DD}	V
Capacitance A, Capacitance B[3]	C_A, C_B	f = 1 MHz, measured to GND, code = half scale				
		R_{AB} = 10 kΩ		25		pF
		R_{AB} = 100 kΩ		12		pF
Capacitance W[3]	C_W	f = 1 MHz, measured to GND, code = half scale				
		R_{AB} = 10 kΩ		12		pF
		R_{AB} = 100 kΩ		5		pF

Downloaded from Arrow.com.

SPECIFICATIONS

Table 3. (Continued)

Parameter	Symbol	Test Conditions/Comments	Min	Typ[1]	Max	Unit
Common-Mode Leakage Current[3]		$V_A = V_W = V_B$	−500	±15	+500	nA
DIGITAL INPUTS						
Input Logic[3]						
High	V_{INH}	V_{LOGIC} = 1.8 V to 2.3 V	0.8 × V_{LOGIC}			V
		V_{LOGIC} = 2.3 V to 5.5 V	0.7 × V_{LOGIC}			V
Low	V_{INL}				0.2 × V_{LOGIC}	V
Input Hysteresis[3]	V_{HYST}		0.1 × V_{LOGIC}			V
Input Current[3]	I_{IN}				±1	µA
Input Capacitance[3]	C_{IN}			5		pF
DIGITAL OUTPUTS						
Output High Voltage[3]	V_{OH}	$R_{PULL-UP}$ = 2.2 kΩ to V_{LOGIC}		V_{LOGIC}		V
Output Low Voltage[3]	V_{OL}	I_{SINK} = 3 mA			0.4	V
		I_{SINK} = 6 mA, V_{LOGIC} > 2.3 V			0.6	V
Three-State Leakage Current			−1		+1	µA
Three-State Output Capacitance				2		pF
POWER SUPPLIES						
Single-Supply Power Range	V_{DD}	V_{SS} = GND	2.3		5.5	V
Dual-Supply Power Range	V_{DD}/V_{SS}		±2.25		±2.75	V
Logic Supply Range	V_{LOGIC}	Single supply, V_{SS} = GND	1.8		V_{DD}	V
		Dual supply, V_{SS} < GND	2.25		V_{DD}	V
Positive Supply Current	I_{DD}	$V_{IH} = V_{LOGIC}$ or V_{IL} = GND				
		V_{DD} = 5.5 V		0.7	5.5	µA
		V_{DD} = 2.3 V		400		nA
Negative Supply Current	I_{SS}	$V_{IH} = V_{LOGIC}$ or V_{IL} = GND	−5.5	−0.7		µA
EEPROM Store Current[3, 6]	$I_{DD_EEPROM_STORE}$	$V_{IH} = V_{LOGIC}$ or V_{IL} = GND		2		mA
EEPROM Read Current[3, 7]	$I_{DD_EEPROM_READ}$	$V_{IH} = V_{LOGIC}$ or V_{IL} = GND		320		µA
Logic Supply Current	I_{LOGIC}	$V_{IH} = V_{LOGIC}$ or V_{IL} = GND		0.05	1.4	µA
Power Dissipation[8]	P_{DISS}	$V_{IH} = V_{LOGIC}$ or V_{IL} = GND		3.5		µW
Power Supply Rejection Ratio	PSRR	$\Delta V_{DD}/\Delta V_{SS} = V_{DD}$ ± 10%, code = full scale		−66	−60	dB
DYNAMIC CHARACTERISTICS[9]						
Bandwidth	BW	−3 dB				
		R_{AB} = 10 kΩ		3		MHz
		R_{AB} = 100 kΩ		0.43		MHz
Total Harmonic Distortion	THD	V_{DD}/V_{SS} = ±2.5 V, V_A = 1 V rms, V_B = 0 V, f = 1 kHz				
		R_{AB} = 10 kΩ		−80		dB
		R_{AB} = 100 kΩ		−90		dB
Resistor Noise Density	e_{N_WB}	Code = half scale, T_A = 25°C, f = 10 kHz				
		R_{AB} = 10 kΩ		7		nV/√Hz
		R_{AB} = 100 kΩ		20		nV/√Hz
V_W Settling Time	t_S	V_A = 5 V, V_B = 0 V, from zero scale to full scale, ±0.5 LSB error band				
		R_{AB} = 10 kΩ		2		µs
		R_{AB} = 100 kΩ		12		µs
Crosstalk (C_{W1}/C_{W2})	C_T	R_{AB} = 10 kΩ		10		nV-sec
		R_{AB} = 100 kΩ		25		nV-sec
Analog Crosstalk	C_{TA}			−90		dB
Endurance[10]		T_A = 25°C		1		Mcycles

Downloaded from Arrow.com.

SPECIFICATIONS

Table 3. (Continued)

Parameter	Symbol	Test Conditions/Comments	Min	Typ[1]	Max	Unit
			100			kcycles
Data Retention[11, 12]				50		Years

1 Typical values represent average readings at 25°C, V_{DD} = 5 V, V_{SS} = 0 V, and V_{LOGIC} = 5 V.

2 Resistor integral nonlinearity error (R-INL) is the deviation from an ideal value measured between the maximum resistance and the minimum resistance wiper positions. R-DNL measures the relative step change from ideal between successive tap positions. The maximum wiper current is limited to (0.7 × V_{DD})/R_{AB}.

3 Guaranteed by design and characterization, not subject to production test.

4 INL and DNL are measured at V_{WB} with the RDAC configured as a potentiometer divider similar to a voltage output DAC. V_A = V_{DD} and V_B = 0 V. DNL specification limits of ±1 LSB maximum are guaranteed monotonic operating conditions.

5 Resistor Terminal A, Resistor Terminal B, and Resistor Terminal W have no limitations on polarity with respect to each other. Dual-supply operation enables ground referenced bipolar signal adjustment.

6 Different from operating current; supply current for EEPROM program lasts approximately 30 ms.

7 Different from operating current; supply current for EEPROM read lasts approximately 20 µs.

8 P_{DISS} is calculated from (I_{DD} × V_{DD}) + (I_{LOGIC} × V_{LOGIC}).

9 All dynamic characteristics use V_{DD}/V_{SS} = ±2.5 V, and V_{LOGIC} = 2.5 V.

10 Endurance is qualified to 100,000 cycles per JEDEC Standard 22, Method A117 and measured at −40°C to +125°C.

11 Retention lifetime equivalent at junction temperature (T_J) = 125°C per JEDEC Standard 22, Method A117. Retention lifetime, based on an activation energy of 1 eV, derates with junction temperature in the Flash/EE memory.

12 50 years apply to an endurance of 1000 cycles. An endurance of 100,000 cycles has an equivalent retention lifetime of 5 years.

Downloaded from Arrow.com.

SPECIFICATIONS

INTERFACE TIMING SPECIFICATIONS

V_{LOGIC} = 1.8 V to 5.5 V; all specifications T_{MIN} to T_{MAX}, unless otherwise noted.

Table 4. SPI Interface

Parameter[1]	Test Conditions/Comments	Min	Typ	Max	Unit	Description
t_1	V_{LOGIC} > 1.8 V	20			ns	SCLK cycle time
	V_{LOGIC} = 1.8 V	30			ns	
t_2	V_{LOGIC} > 1.8 V	10			ns	SCLK high time
	V_{LOGIC} = 1.8 V	15			ns	
t_3	V_{LOGIC} > 1.8 V	10			ns	SCLK low time
	V_{LOGIC} = 1.8 V	15			ns	
t_4		10			ns	$\overline{SYNC}$-to-SCLK falling edge setup time
t_5		5			ns	Data setup time
t_6		5			ns	Data hold time
t_7		10			ns	$\overline{SYNC}$ rising edge to next SCLK fall ignored
t_8[2]		20			ns	Minimum $\overline{SYNC}$ high time
t_9[3]			50		ns	SCLK rising edge to SDO valid
t_{10}				500	ns	$\overline{SYNC}$ rising edge to SDO pin disable

[1] All input signals are specified with $t_r = t_f$ = 1 ns/V (10% to 90% of V_{DD}) and timed from a voltage level of $(V_{IL} + V_{IH})/2$.

[2] Refer to $t_{EEPROM_PROGRAM}$ and $t_{EEPROM_READBACK}$ for memory commands operations (see Table 6).

[3] R_{PULL_UP} = 2.2 kΩ to V_{DD} with a capacitance load of 168 pF.

Table 5. I²C Interface

Parameter[1]	Test Conditions/Comments	Min	Typ	Max	Unit	Description
f_{SCL}[2]	Standard mode			100	kHz	Serial clock frequency
	Fast mode			400	kHz	
t_1	Standard mode	4.0			µs	SCL high time, t_{HIGH}
	Fast mode	0.6			µs	
t_2	Standard mode	4.7			µs	SCL low time, t_{LOW}
	Fast mode	1.3			µs	
t_3	Standard mode	250			ns	Data setup time, $t_{SU;\ DAT}$
	Fast mode	100			ns	
t_4	Standard mode	0		3.45	µs	Data hold time, $t_{HD;\ DAT}$
	Fast mode	0		0.9	µs	
t_5	Standard mode	4.7			µs	Setup time for a repeated start condition, $t_{SU;\ STA}$
	Fast mode	0.6			µs	
t_6	Standard mode	4			µs	Hold time (repeated) for a start condition, $t_{HD;\ STA}$
	Fast mode	0.6			µs	
t_7	Standard mode	4.7			µs	Bus free time between a stop and a start condition, t_{BUF}
	Fast mode	1.3			µs	
t_8	Standard mode	4			µs	Setup time for a stop condition, $t_{SU;\ STO}$
	Fast mode	0.6			µs	
t_9	Standard mode			1000	ns	Rise time of SDA signal, t_{RDA}
	Fast mode	20 + 0.1 C_L		300	ns	
t_{10}	Standard mode			300	ns	Fall time of SDA signal, t_{FDA}
	Fast mode	20 + 0.1 C_L		300	ns	
t_{11}	Standard mode			1000	ns	Rise time of SCL signal, t_{RCL}
	Fast mode	20 + 0.1 C_L		300	ns	
t_{11A}	Standard mode			1000	ns	Rise time of SCL signal after a repeated start condition and after an acknowledge bit, t_{RCL1} (not shown in Figure 5)

Downloaded from Arrow.com.

SPECIFICATIONS

Table 5. I²C Interface (Continued)

Parameter[1]	Test Conditions/Comments	Min	Typ	Max	Unit	Description
	Fast mode	20 + 0.1 C_L		300	ns	
t_{12}	Standard mode			300	ns	Fall time of SCL signal, t_{FCL}
	Fast mode	20 + 0.1 C_L		300	ns	
t_{SP}[3]	Fast mode	0		50	ns	Pulse width of suppressed spike

1 Maximum bus capacitance is limited to 400 pF.

2 The SDA and SCL timing is measured with the input filters enabled. Switching off the input filters improves the transfer rate; however, it has a negative effect on the EMC behavior of the part.

3 Input filtering on the SCL and SDA inputs suppresses noise spikes that are less than 50 ns for fast mode.

Table 6. Control Pins

Parameter	Min	Typ	Max	Unit	Description
t_1	1			µs	End command to $\overline{LRDAC}$ falling edge
t_2	50			ns	Minimum $\overline{LRDAC}$ low time
t_3	0.1		10	µs	$\overline{RESET}$ low time
$t_{EEPROM_PROGRAM}$[1]		15	50	ms	Memory program time (not shown in Figure 8)
$t_{EEPROM_READBACK}$		7	30	µs	Memory readback time (not shown in Figure 8)
t_{POWER_UP}[2]			75	µs	Start-up time (not shown in Figure 8)
t_{RESET}		30		µs	Reset EEPROM restore time (not shown in Figure 8)

1 EEPROM program time depends on the temperature and EEPROM write cycles. Higher timing is expected at lower temperatures and higher write cycles.

2 Maximum time after $V_{DD} - V_{SS}$ is equal to 2.3 V.

Downloaded from Arrow.com.

SPECIFICATIONS

SHIFT REGISTER AND TIMING DIAGRAMS

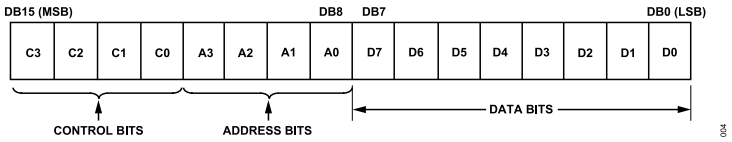

Figure 4. Input Shift Register Contents

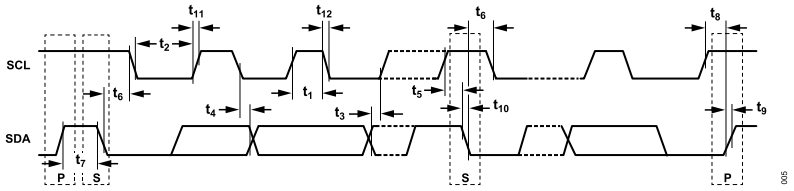

Figure 5. I²C Serial Interface Timing Diagram (Typical Write Sequence)

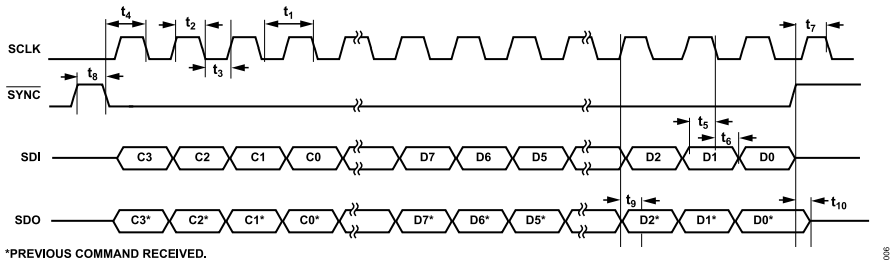

Figure 6. SPI Serial Interface Timing Diagram, CPOL = 0, CPHA = 1

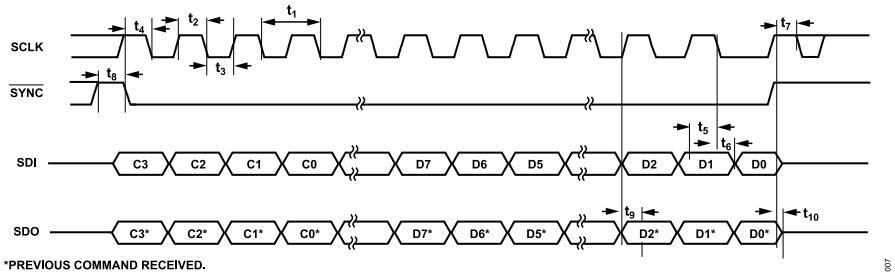

Figure 7. SPI Serial Interface Timing Diagram, CPOL = 1, CPHA = 0

Downloaded from Arrow.com.

SPECIFICATIONS

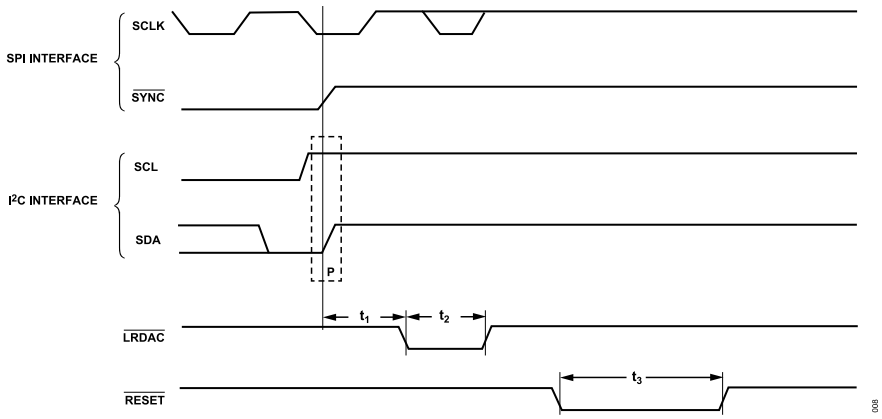

Figure 8. Control Pins Timing Diagram

Downloaded from Arrow.com.

ABSOLUTE MAXIMUM RATINGS

T_A = 25°C, unless otherwise noted.

Table 7.

Parameter	Rating
V_{DD} to GND	−0.3 V to +7.0 V
V_{SS} to GND	+0.3 V to −7.0 V
V_{DD} to V_{SS}	7 V
V_{LOGIC} to GND	−0.3 V to V_{DD} + 0.3 V or +7.0 V (whichever is less)
V_A, V_W, V_B to GND	V_{SS} − 0.3 V, V_{DD} + 0.3 V
I_A, I_W, I_B	
Pulsed[1]	
Frequency > 10 kHz[2]	
R_{AW} = 10 kΩ	±6 mA/d
R_{AW} = 100 kΩ	±1.5 mA/d
Frequency ≤ 10 kHz[2]	
R_{AW} = 10 kΩ	±6 mA/√d
R_{AW} = 100 kΩ	±1.5 mA/√d
Digital Inputs	−0.3 V to V_{LOGIC} + 0.3 V or +7 V (whichever is less)
Operating Temperature Range, T_A[3]	−40°C to +125°C
Maximum Junction Temperature, T_J Maximum	150°C
Storage Temperature Range	−65°C to +150°C
Reflow Soldering	
Peak Temperature	260°C
Time at Peak Temperature	20 sec to 40 sec
Package Power Dissipation	$(T_J \text{ max} - T_A)/\theta_{JA}$

1 Maximum terminal current is bounded by the maximum current handling of the switches, maximum power dissipation of the package, and maximum applied voltage across any two of the A, B, and W terminals at a given resistance.

2 d = pulse duty factor.

3 Includes programming of EEPROM memory.

Stresses at or above those listed under Absolute Maximum Ratings may cause permanent damage to the product. This is a stress rating only; functional operation of the product at these or any other conditions above those indicated in the operational section of this specification is not implied. Operation beyond the maximum operating conditions for extended periods may affect product reliability.

THERMAL RESISTANCE

Thermal performance is directly linked to printed circuit board (PCB) design and operating environment. Careful attention to PCB thermal design is required.

θ_{JA} is the junction to ambient thermal resistance, measured in a JEDEC natural convection environment.

θ_{JB} is the junction to board thermal resistance, measured at a point on the board 1 mm from the package edge, along the package center line, measured in a JEDEC θ_{JB} environment.

Table 8. Thermal Resistance

Package Type[1]	θ_{JA}	θ_{JB}	Unit
24-Lead LFCSP	66.8[2]	32	°C/W
20-Lead TSSOP	105.9[2]	51.78	°C/W

1 Thermal impedance simulated values are based on a JEDEC 2S2P thermal test board. See JEDEC JESD-51.

2 JEDEC 2S2P test board, still air (0 m/sec airflow).

ELECTROSTATIC DISCHARGE (ESD) RATINGS

The following ESD information is provided for handling of ESD-sensitive devices in an ESD protected area only.

Human body model (HBM) per ANSI/ESDA/JEDEC JS-001.

Field induced charged device model (FICDM) and charged device model (CDM) per ANSI/ESDA/JEDEC JS-002.

ESD RATINGS FOR AD5124/AD5144/AD5144A

Table 9. AD5124/AD5144/AD5144A, 24-Lead LFCSP and 20-Lead TSSOP

ESD Model	Withstand Voltage (V)	Class
HBM	4000	3A
FICDM	1250	C3

ESD CAUTION

ESD (electrostatic discharge) sensitive device. Charged devices and circuit boards can discharge without detection. Although this product features patented or proprietary protection circuitry, damage may occur on devices subjected to high energy ESD. Therefore, proper ESD precautions should be taken to avoid performance degradation or loss of functionality.

Downloaded from Arrow.com.

PIN CONFIGURATIONS AND FUNCTION DESCRIPTIONS

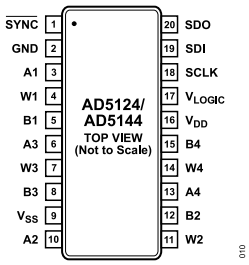

Figure 9. 20-Lead TSSOP, SPI Interface Pin Configuration (AD5124/AD5144)

Table 10. 20-Lead TSSOP, SPI Interface Pin Function Descriptions (AD5124/AD5144)

Pin No.	Mnemonic	Description
1	$\overline{SYNC}$	Synchronization Data Input, Active Low. When $\overline{SYNC}$ returns high, data is loaded into the input shift register.
2	GND	Ground Pin, Logic Ground Reference.
3	A1	Terminal A of RDAC1. $V_{SS} \leq V_A \leq V_{DD}$.
4	W1	Wiper Terminal of RDAC1. $V_{SS} \leq V_W \leq V_{DD}$.
5	B1	Terminal B of RDAC1. $V_{SS} \leq V_B \leq V_{DD}$.
6	A3	Terminal A of RDAC3. $V_{SS} \leq V_A \leq V_{DD}$.
7	W3	Wiper Terminal of RDAC3. $V_{SS} \leq V_W \leq V_{DD}$.
8	B3	Terminal B of RDAC3. $V_{SS} \leq V_B \leq V_{DD}$.
9	V_{SS}	Negative Power Supply. Decouple this pin with 0.1 µF ceramic capacitors and 10 µF capacitors.
10	A2	Terminal A of RDAC2. $V_{SS} \leq V_A \leq V_{DD}$.
11	W2	Wiper Terminal of RDAC2. $V_{SS} \leq V_W \leq V_{DD}$.
12	B2	Terminal B of RDAC2. $V_{SS} \leq V_B \leq V_{DD}$.
13	A4	Terminal A of RDAC4. $V_{SS} \leq V_A \leq V_{DD}$.
14	W4	Wiper Terminal of RDAC4. $V_{SS} \leq V_W \leq V_{DD}$.
15	B4	Terminal B of RDAC4. $V_{SS} \leq V_B \leq V_{DD}$.
16	V_{DD}	Positive Power Supply. Decouple this pin with 0.1 µF ceramic capacitors and 10 µF capacitors.
17	V_{LOGIC}	Logic Power Supply; 1.8 V to V_{DD}. Decouple this pin with 0.1 µF ceramic capacitors and 10 µF capacitors.
18	SCLK	Serial Clock Line. Data is clocked in at the logic low transition.
19	SDI	Serial Data Input.
20	SDO	Serial Data Output. This is an open-drain output pin, and it needs an external pull-up resistor.

Downloaded from Arrow.com.

PIN CONFIGURATIONS AND FUNCTION DESCRIPTIONS

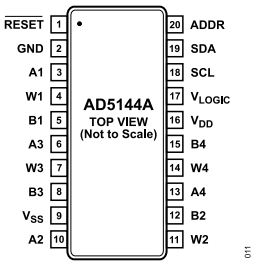

Figure 10. 20-Lead TSSOP, I²C Interface Pin Configuration (AD5144A)

Table 11. 20-Lead TSSOP, I²C Interface Pin Function Descriptions (AD5144A)

Pin No.	Mnemonic	Description
1	$\overline{\text{RESET}}$	Hardware Reset Pin. Refresh the RDAC registers from EEPROM. $\overline{\text{RESET}}$ is activated at the logic low. If this pin is not used, tie $\overline{\text{RESET}}$ to V_{LOGIC}.
2	GND	Ground Pin, Logic Ground Reference.
3	A1	Terminal A of RDAC1. $V_{SS} \leq V_A \leq V_{DD}$.
4	W1	Wiper Terminal of RDAC1. $V_{SS} \leq V_W \leq V_{DD}$.
5	B1	Terminal B of RDAC1. $V_{SS} \leq V_B \leq V_{DD}$.
6	A3	Terminal A of RDAC3. $V_{SS} \leq V_A \leq V_{DD}$.
7	W3	Wiper Terminal of RDAC3. $V_{SS} \leq V_W \leq V_{DD}$.
8	B3	Terminal B of RDAC3. $V_{SS} \leq V_B \leq V_{DD}$.
9	V_{SS}	Negative Power Supply. Decouple this pin with 0.1 µF ceramic capacitors and 10 µF capacitors.
10	A2	Terminal A of RDAC2. $V_{SS} \leq V_A \leq V_{DD}$.
11	W2	Wiper Terminal of RDAC2. $V_{SS} \leq V_W \leq V_{DD}$.
12	B2	Terminal B of RDAC2. $V_{SS} \leq V_B \leq V_{DD}$.
13	A4	Terminal A of RDAC4. $V_{SS} \leq V_A \leq V_{DD}$.
14	W4	Wiper Terminal of RDAC4. $V_{SS} \leq V_W \leq V_{DD}$.
15	B4	Terminal B of RDAC4. $V_{SS} \leq V_B \leq V_{DD}$.
16	V_{DD}	Positive Power Supply. Decouple this pin with 0.1 µF ceramic capacitors and 10 µF capacitors.
17	V_{LOGIC}	Logic Power Supply; 1.8 V to V_{DD}. Decouple this pin with 0.1 µF ceramic capacitors and 10 µF capacitors.
18	SCL	Serial Clock Line. Data is clocked in at the logic low transition.
19	SDA	Serial Data Input/Output.
20	ADDR	Programmable Address for Multiple Package Decoding.

Downloaded from Arrow.com.

PIN CONFIGURATIONS AND FUNCTION DESCRIPTIONS

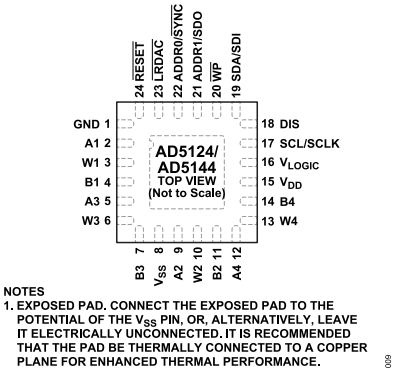

Figure 11. 24-Lead LFCSP Pin Configuration (AD5124/AD5144)

Table 12. 24-Lead LFCSP Pin Function Descriptions (AD5124/AD5144)

Pin No.	Mnemonic	Description
1	GND	Ground Pin, Logic Ground Reference.
2	A1	Terminal A of RDAC1. $V_{SS} \le V_A \le V_{DD}$.
3	W1	Wiper Terminal of RDAC1. $V_{SS} \le V_W \le V_{DD}$.
4	B1	Terminal B of RDAC1. $V_{SS} \le V_B \le V_{DD}$.
5	A3	Terminal A of RDAC3. $V_{SS} \le V_A \le V_{DD}$.
6	W3	Wiper Terminal of RDAC3. $V_{SS} \le V_W \le V_{DD}$.
7	B3	Terminal B of RDAC3. $V_{SS} \le V_B \le V_{DD}$.
8	V_{SS}	Negative Power Supply. Decouple this pin with 0.1 µF ceramic capacitors and 10 µF capacitors.
9	A2	Terminal A of RDAC2. $V_{SS} \le V_A \le V_{DD}$.
10	W2	Wiper Terminal of RDAC2. $V_{SS} \le V_W \le V_{DD}$.
11	B2	Terminal B of RDAC2. $V_{SS} \le V_B \le V_{DD}$.
12	A4	Terminal A of RDAC4. $V_{SS} \le V_A \le V_{DD}$.
13	W4	Wiper Terminal of RDAC4. $V_{SS} \le V_W \le V_{DD}$.
14	B4	Terminal B of RDAC4. $V_{SS} \le V_B \le V_{DD}$.
15	V_{DD}	Positive Power Supply. Decouple this pin with 0.1 µF ceramic capacitors and 10 µF capacitors.
16	V_{LOGIC}	Logic Power Supply; 1.8 V to V_{DD}. Decouple this pin with 0.1 µF ceramic capacitors and 10 µF capacitors.
17	SCL/SCLK	I^2C Serial Clock Line (SCL). Data is clocked in at the logic low transition. SPI Serial Clock Line (SCLK). Data is clocked in at the logic low transition.
18	DIS	Digital Interface Select (SPI/I^2C Select). SPI when DIS = 0 (GND), and I^2C when DIS = 1 (V_{LOGIC}). This pin cannot be left floating.
19	SDA/SDI	Serial Data Input/Output (SDA), When DIS = 1. Serial Data Input (SDI), When DIS = 0.
20	$\overline{WP}$	Optional Write Protect. This pin prevents any changes to the present RDAC and EEPROM content, except when reloading the content of the EEPROM into the RDAC register. $\overline{WP}$ is activated at logic low. If this pin is not used, tie $\overline{WP}$ to V_{LOGIC}.
21	ADDR1/SDO	Programmable Address (ADDR1) for Multiple Package Decoding, When DIS = 1. Serial Data Output (SDO). Open-drain output, needs an external pull-up resistor, when DIS = 0.
22	ADDR0/$\overline{SYNC}$	Programmable Address (ADDR0) for Multiple Package Decoding, When DIS = 1. Synchronization Data Input, When DIS = 0. This pin is active low. When $\overline{SYNC}$ returns high, data is loaded into the input shift register.
23	$\overline{LRDAC}$	Load RDAC. Transfers the contents of the input registers to their respective RDAC registers when their associated input registers were previously loaded using Command 2 (see Table 17). This allows simultaneous update of all RDAC registers. $\overline{LRDAC}$ is activated at the high-to-low transition. If not used, tie $\overline{LRDAC}$ to V_{LOGIC}.
24	$\overline{RESET}$	Hardware Reset Pin. Refresh the RDAC registers from EEPROM. $\overline{RESET}$ is activated at the logic low. If not used, tie $\overline{RESET}$ to V_{LOGIC}.
	EPAD	Exposed Pad. Connect the exposed pad to the potential of the V_{SS} pin, or, alternatively, leave it electrically unconnected. It is recommended that the pad be thermally connected to a copper plane for enhanced thermal performance.

Downloaded from Arrow.com.

TYPICAL PERFORMANCE CHARACTERISTICS

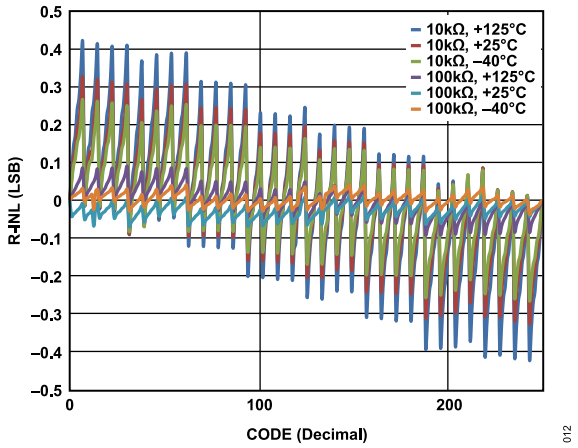

Figure 12. R-INL vs. Code (AD5144/AD5144A)

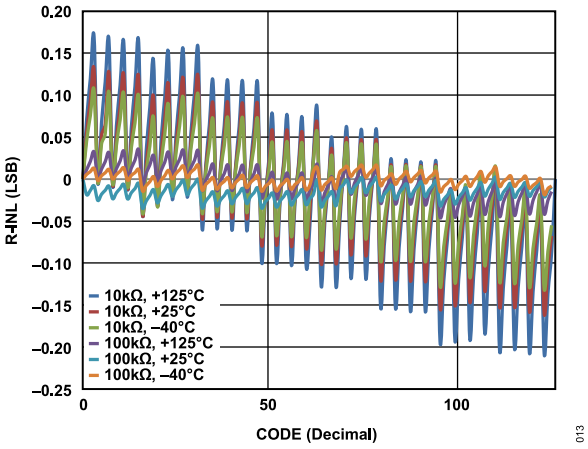

Figure 13. R-INL vs. Code (AD5124)

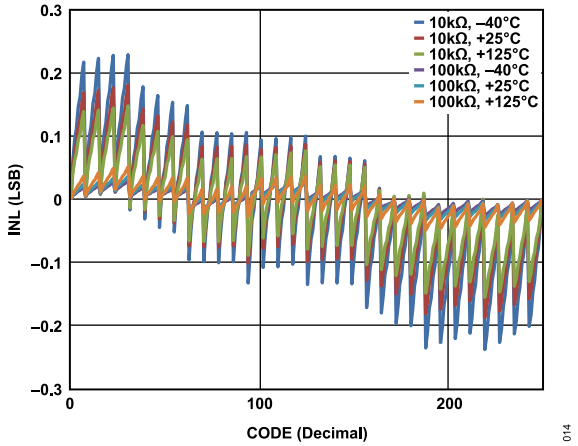

Figure 14. INL vs. Code (AD5144/AD5144A)

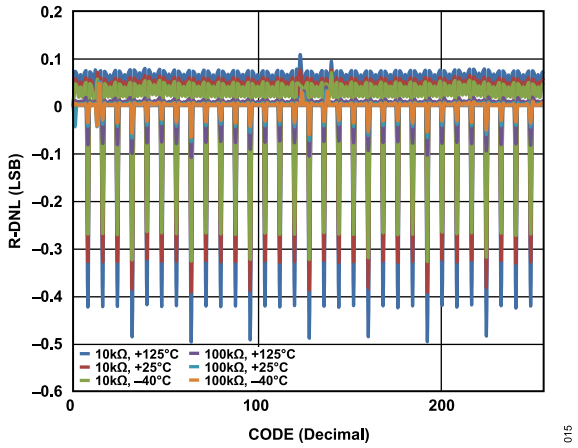

Figure 15. R-DNL vs. Code (AD5144/AD5144A)

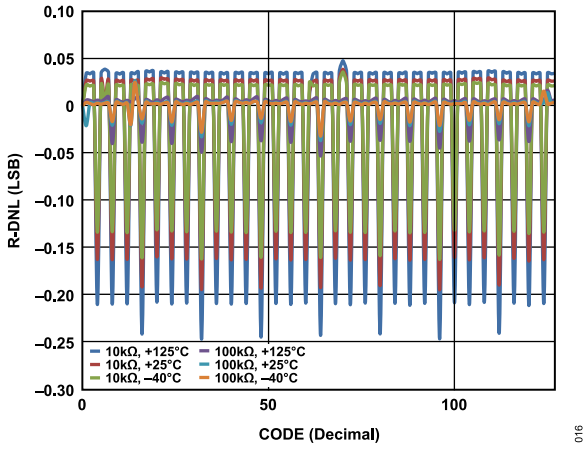

Figure 16. R-DNL vs. Code (AD5124)

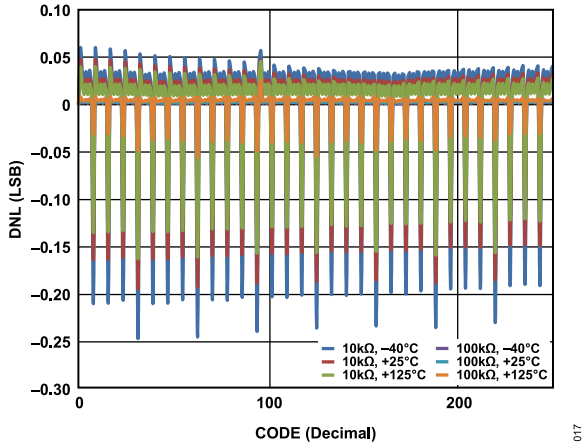

Figure 17. DNL vs. Code (AD5144/AD5144A)

Downloaded from Arrow.com.

TYPICAL PERFORMANCE CHARACTERISTICS

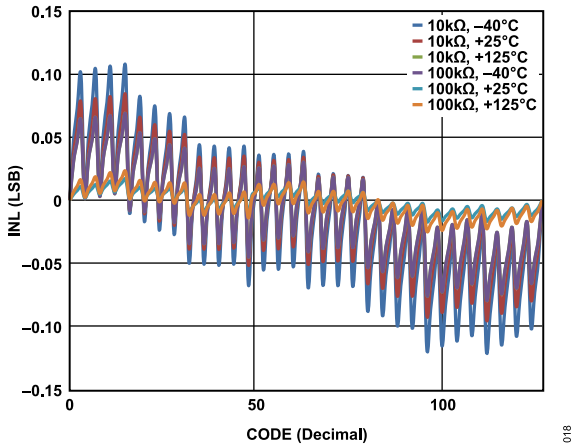

Figure 18. INL vs. Code (AD5124)

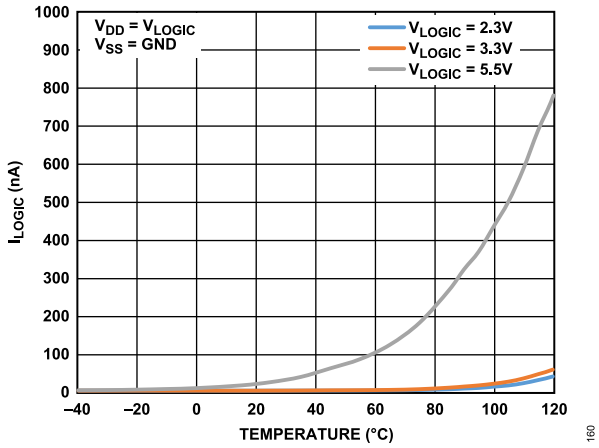

Figure 21. I_{LOGIC} vs. Temperature

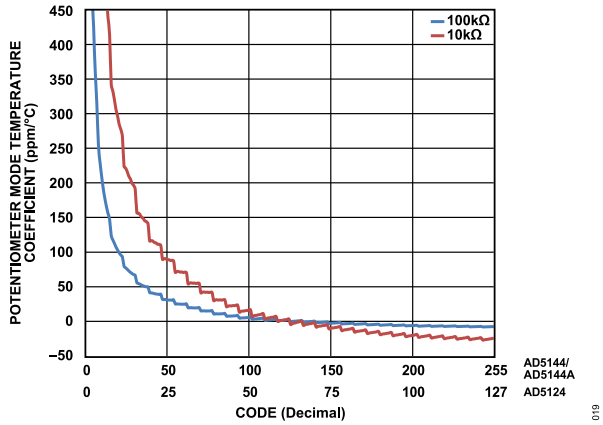

Figure 19. Potentiometer Mode Temperature Coefficient ($(\Delta V_W/V_W)/\Delta T \times 10^6$) vs. Code

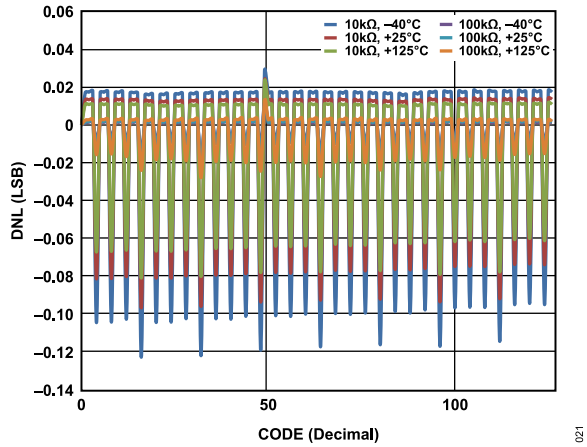

Figure 22. DNL vs. Code (AD5124)

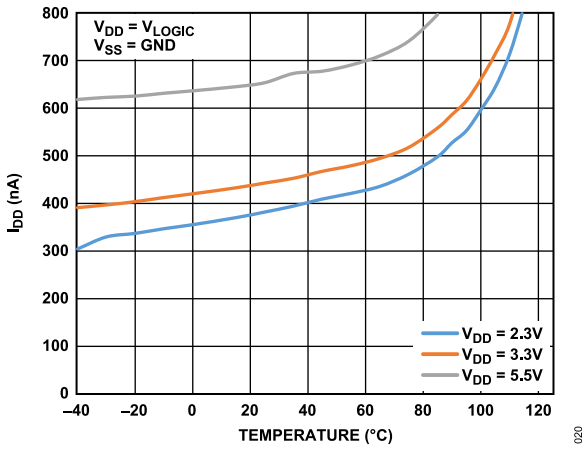

Figure 20. Supply Current vs. Temperature

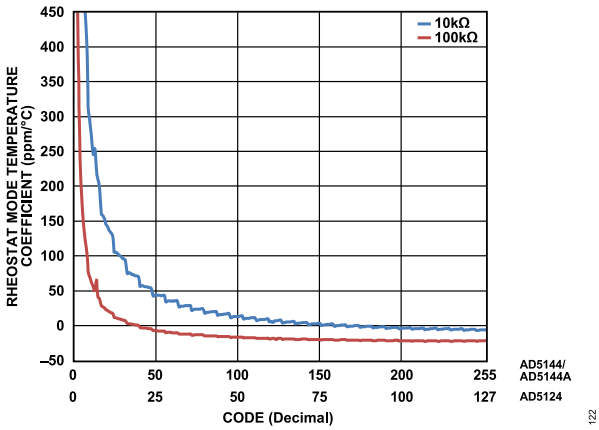

Figure 23. Rheostat Mode Temperature Coefficient ($(\Delta R_{WB}/R_{WB})/\Delta T \times 10^6$) vs. Code

Downloaded from Arrow.com.

TYPICAL PERFORMANCE CHARACTERISTICS

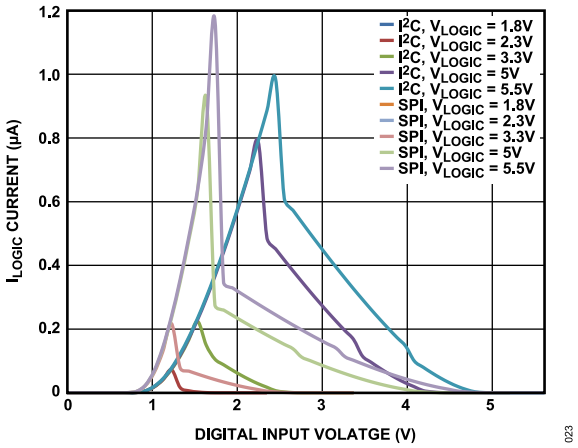

Figure 24. I_{LOGIC} Current vs. Digital Input Voltage

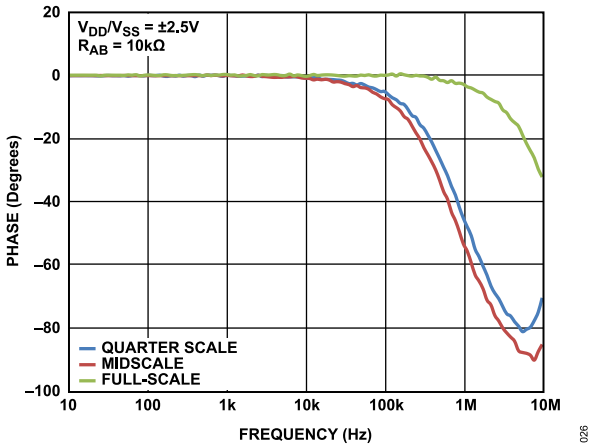

Figure 27. Normalized Phase Flatness vs. Frequency, R_{AB} = 10 kΩ

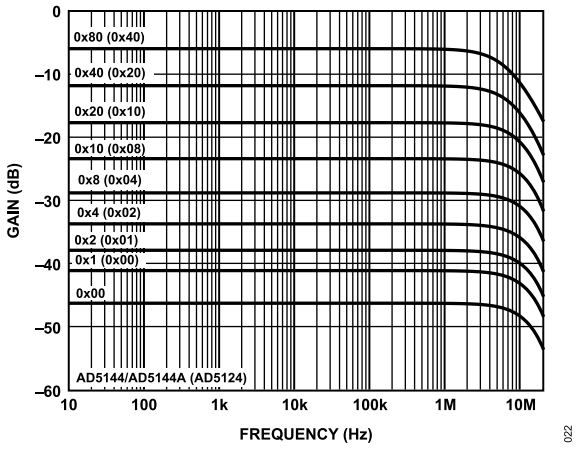

Figure 25. 10 kΩ Gain vs. Frequency vs. Code

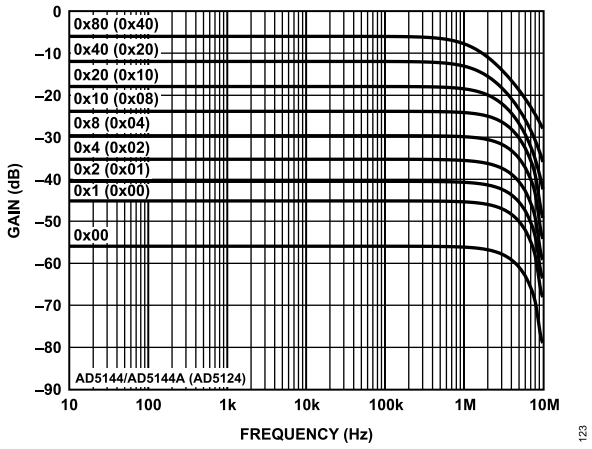

Figure 28. 100 kΩ Gain vs. Frequency vs. Code

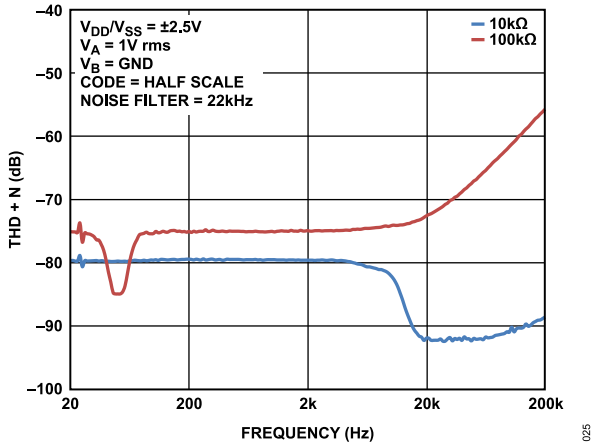

Figure 26. Total Harmonic Distortion Plus Noise (THD + N) vs. Frequency

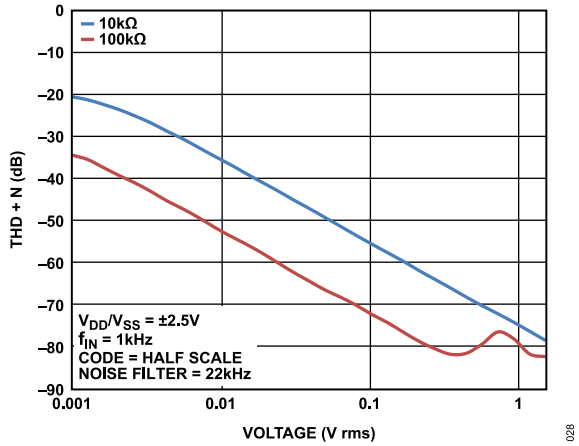

Figure 29. Total Harmonic Distortion Plus Noise (THD + N) vs. Amplitude

Downloaded from Arrow.com.

TYPICAL PERFORMANCE CHARACTERISTICS

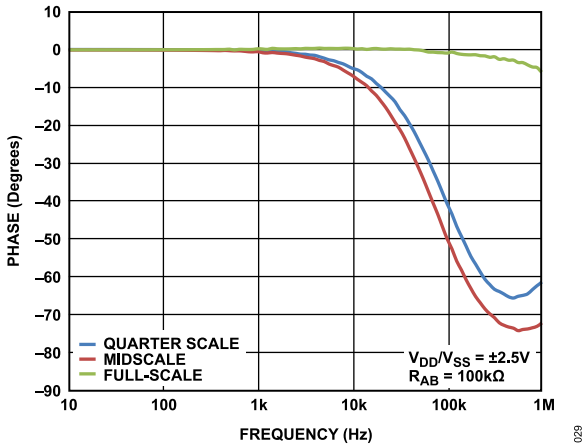

Figure 30. Normalized Phase Flatness vs. Frequency, R_{AB} = 100 kΩ

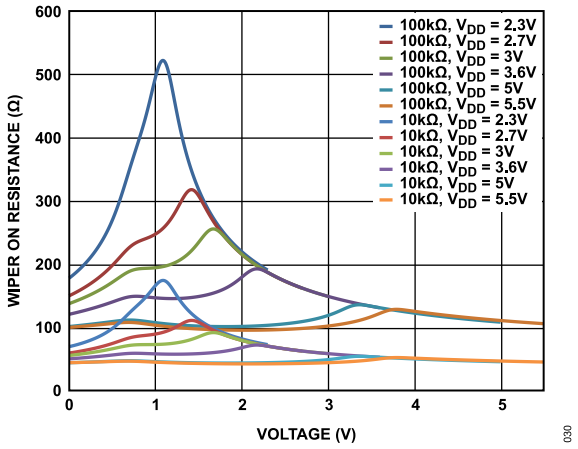

Figure 31. Incremental Wiper On Resistance vs. Positive Power Supply (V_{DD})

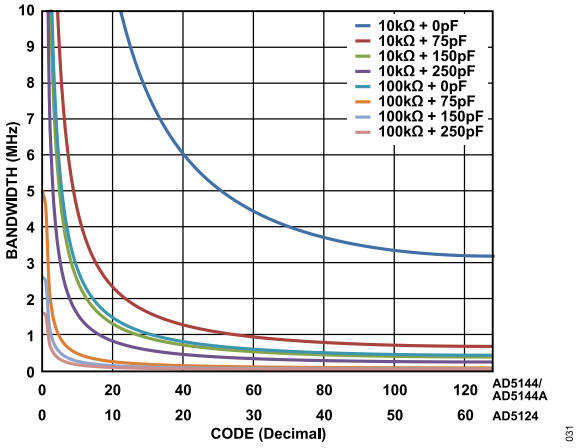

Figure 32. Maximum Bandwidth vs. Code vs. Net Capacitance

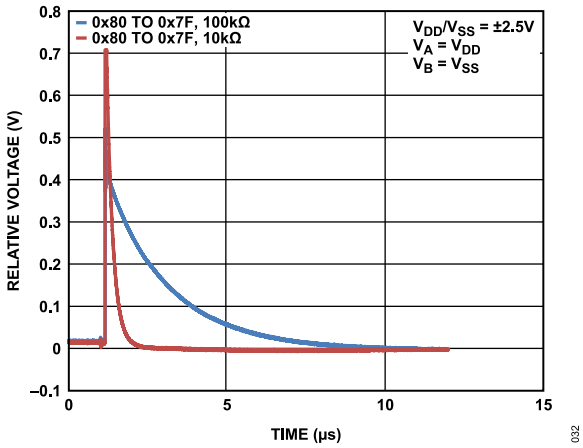

Figure 33. Maximum Transition Glitch

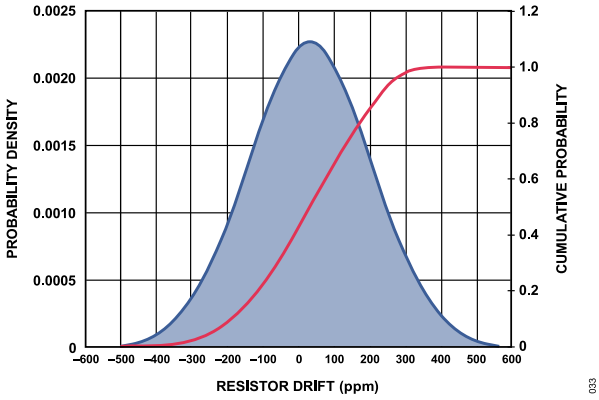

Figure 34. Resistor Lifetime Drift

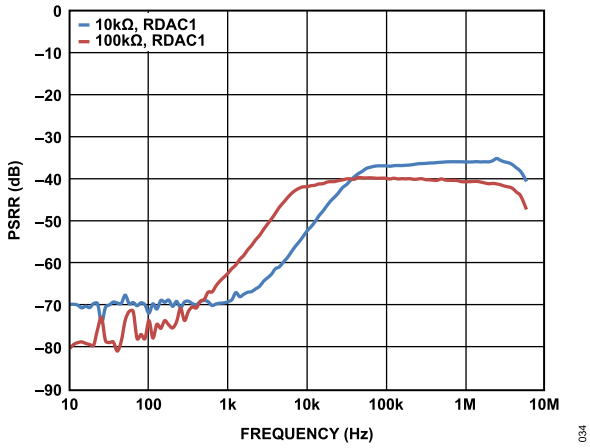

Figure 35. Power Supply Rejection Ratio (PSRR) vs. Frequency

Downloaded from Arrow.com.

TYPICAL PERFORMANCE CHARACTERISTICS

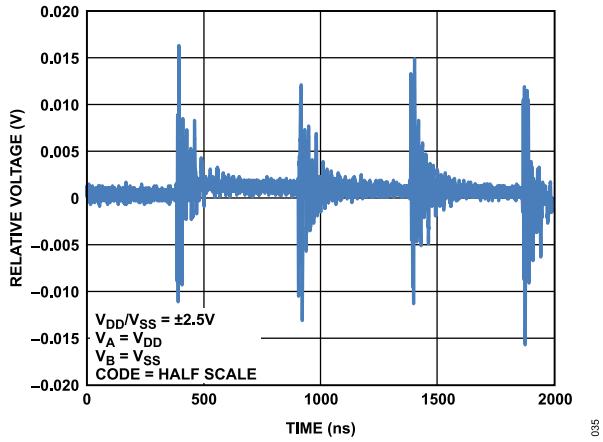

Figure 36. Digital Feedthrough

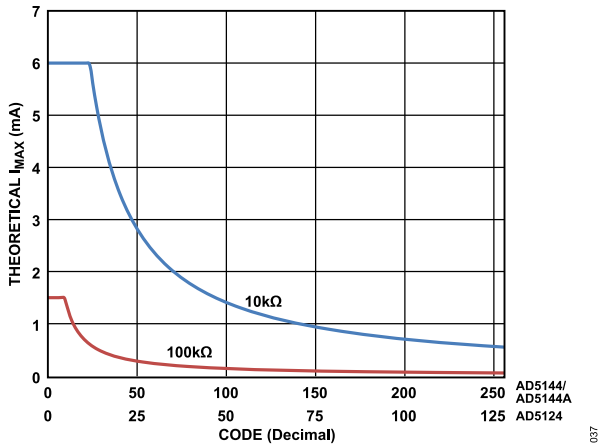

Figure 38. Theoretical Maximum Current vs. Code

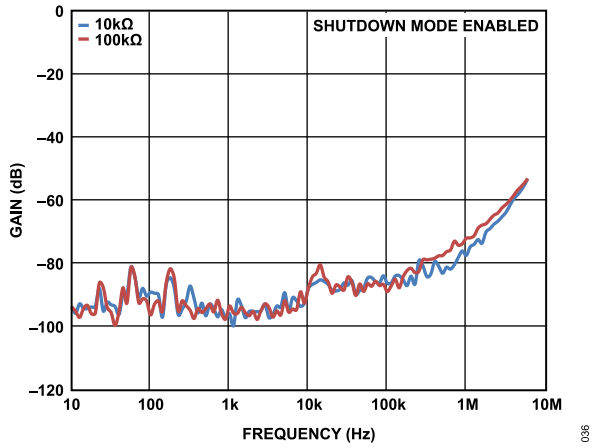

Figure 37. Shutdown Isolation vs. Frequency

Downloaded from Arrow.com.

TEST CIRCUITS

Figure 39 to Figure 43 define the test conditions used in the Specifications section.

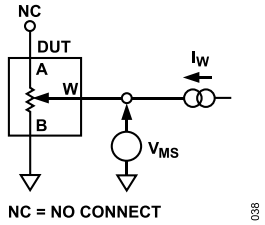

Figure 39. Resistor Integral Nonlinearity Error (Rheostat Operation; R-INL, R-DNL)

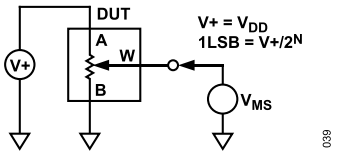

Figure 40. Potentiometer Divider Nonlinearity Error (INL, DNL)

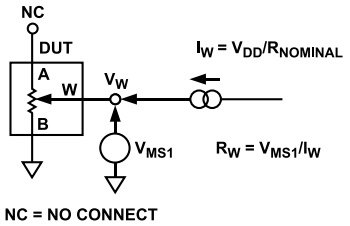

Figure 41. Wiper Resistance

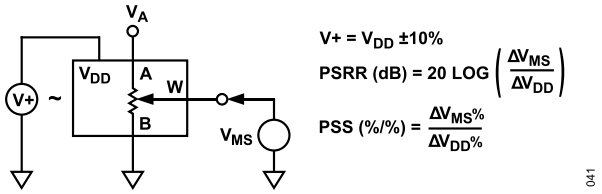

Figure 42. Power Supply Sensitivity and Power Supply Rejection Ratio (PSS and PSRR)

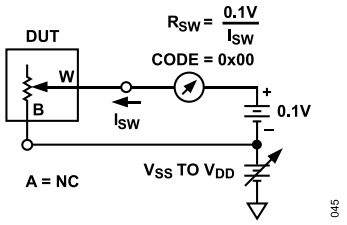

Figure 43. Incremental On Resistance

Downloaded from Arrow.com.

THEORY OF OPERATION

The AD5124/AD5144/AD5144A digital programmable potentiometers are designed to operate as true variable resistors for analog signals within the terminal voltage range of $V_{SS} < V_{TERM} < V_{DD}$. The resistor wiper position is determined by the RDAC register contents. The RDAC register acts as a scratchpad register that allows unlimited changes of resistance settings. A secondary register (the input register) can be used to preload the RDAC register data.

The RDAC register can be programmed with any position setting using the I^2C or SPI interface (depending on the model). When a desirable wiper position is found, this value can be stored in the EEPROM memory. Thereafter, the wiper position is always restored to that position for subsequent power-ups. The storing of the EEPROM data takes approximately 15 ms; during this time, the device is locked and does not acknowledge any new command, preventing any changes.

RDAC REGISTER AND EEPROM

The RDAC register directly controls the position of the digital potentiometer wiper. For example, when the RDAC register is loaded with 0x80 (AD5124/AD5144, 256 taps), the wiper is connected to half scale of the variable resistor. The RDAC register is a standard logic register; there is no restriction on the number of changes allowed.

It is possible to both write to and read from the RDAC register using the digital interface (see Table 13).

The contents of the RDAC register can be stored to the EEPROM using Command 9 (see Table 13). Thereafter, the RDAC register is always restored to that position after subsequent power-up cycles. It is possible to read back data saved into the EEPROM with Command 3 (see Table 13).

Alternatively, the EEPROM can be written to independently using Command 11 (see Table 17).

INPUT SHIFT REGISTER

For the AD5124/AD5144/AD5144A, the input shift register is 16 bits wide, as shown in Figure 4. The 16-bit word consists of four control bits, followed by four address bits and by eight data bits.

If the AD5124 RDAC or EEPROM registers are read from or written to, the lowest data bit (Bit 0) is ignored.

Data is loaded MSB first (Bit 15). The four control bits determine the function of the software command, as listed in Table 13 and Table 17.

Table 13. Reduced Command Operation Truth Table

Command Number	Control Bits[DB15:DB12]				Address Bits[DB11:DB8][1]				Data Bits[DB7:DB0][1]								Operation		
	C3	C2	C1	C0	A3	A2	A1	A0	D7	D6	D5	D4	D3	D2	D1	D0			
0	0	0	0	0	X	X	X	X	X	X	X	X	X	X	X	X	NOP: do nothing.		
1	0	0	0	1	0	0	A1	A0	D7	D6	D5	D4	D3	D2	D1	D0[2]	Write contents of serial register data to RDAC		
2	0	0	1	0	0	0	A1	A0	D7	D6	D5	D4	D3	D2	D1	D0[2]	Write contents of serial register data to input register		
3	0	0	1	1	X	0	A1	A0	X	X	X	X	X	X	D1	D0	Read back contents		
																	D1	**D0**	**Data**
																	0	1	EEPROM
																	1	1	RDAC
9	0	1	1	1	0	0	A1	A0	X	X	X	X	X	X	X	1	Copy RDAC register to EEPROM		
10	0	1	1	1	0	0	A1	A0	X	X	X	X	X	X	X	0	Copy EEPROM into RDAC		
14	1	0	1	1	X	X	X	X	X	X	X	X	X	X	X	X	Software reset		
15	1	1	0	0	A3	0	A1	A0	X	X	X	X	X	X	X	D0	Software shutdown		
																	D0	**Condition**	
																	0	Normal mode	
																	1	Shutdown mode	

[1] X = don't care.

[2] D0 = don't care for AD5124.

Table 14. Reduced Address Bits Table

A3	A2	A1	A0	Channel	Stored Channel Memory
1	0	X[1]	X[1]	All channels	Not applicable
0	0	0	0	RDAC1	RDAC1
0	0	0	1	RDAC2	RDAC2

Downloaded from Arrow.com.

THEORY OF OPERATION

Table 14. Reduced Address Bits Table (Continued)

A3	A2	A1	A0	Channel	Stored Channel Memory
0	0	1	0	RDAC3	RDAC3
0	0	1	1	RDAC4	RDAC4

[1] X = don't care.

SERIAL DATA DIGITAL INTERFACE SELECTION, DIS

The AD5124/AD5144 LFCSP provides the flexibility of a selectable interface. When the digital interface select (DIS) pin is tied low, the SPI mode is engaged. When the DIS pin is tied high, the I^2C mode is engaged.

SPI SERIAL DATA INTERFACE

The AD5124/AD5144 contain a 4-wire, SPI-compatible digital interface (SDI, $\overline{SYNC}$, SDO, and SCLK). The write sequence begins by bringing the $\overline{SYNC}$ line low. The $\overline{SYNC}$ pin must be held low until the complete data-word is loaded from the SDI pin. Data is loaded in at the SCLK falling edge transition, as shown in Figure 6. When $\overline{SYNC}$ returns high, the serial data-word is decoded according to the instructions in Table 17.

To minimize power consumption in the digital input buffers when the part is enabled, operate all serial interface pins close to the V_{LOGIC} supply rails.

$\overline{SYNC}$ Interruption

In a standalone write sequence for the AD5124/AD5144, the $\overline{SYNC}$ line is kept low for 16 falling edges of SCLK, and the instruction is decoded when $\overline{SYNC}$ is pulled high. However, if the $\overline{SYNC}$ line is kept low for less than 16 falling edges of SCLK, the input shift register content is ignored, and the write sequence is considered invalid.

SDO Pin

The serial data output pin (SDO) serves two purposes: to read back the contents of the control, EEPROM, RDAC, and input registers using Command 3 (see Table 13 and Table 17), and to connect the AD5124/AD5144 in daisy-chain mode.

The SDO pin contains an internal open-drain output that needs an external pull-up resistor. The SDO pin is enabled when $\overline{SYNC}$ is pulled low, and the data is clocked out of SDO on the rising edge of SCLK, as shown in Figure 6 and Figure 7.

Downloaded from Arrow.com.

THEORY OF OPERATION

Daisy-Chain Connection

Daisy chaining minimizes the number of port pins required from the controlling IC. As shown in Figure 44, the SDO pin of one package must be tied to the SDI pin of the next package. The clock period may need to be increased because of the propagation delay of the line between subsequent devices. When two AD5124/AD5144 devices are daisy chained, 32 bits of data are required. The first 16 bits are assigned to U2, and the second 16 bits are assigned to U1, as shown in Figure 45. Keep the $\overline{\text{SYNC}}$ pin low until all 32 bits are clocked into their respective serial registers. The $\overline{\text{SYNC}}$ pin is then pulled high to complete the operation.

To prevent data from mislocking (for example, due to noise) the part includes an internal counter, if the SCLK falling edges count is not a multiple of 8, the part ignores the command. A valid clock count is 16, 24, 32, 40, and so on. The counter resets when $\overline{\text{SYNC}}$ returns high.

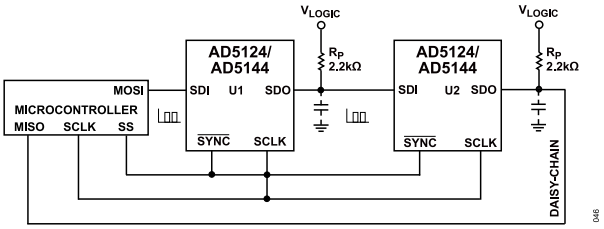

Figure 44. Daisy-Chain Configuration

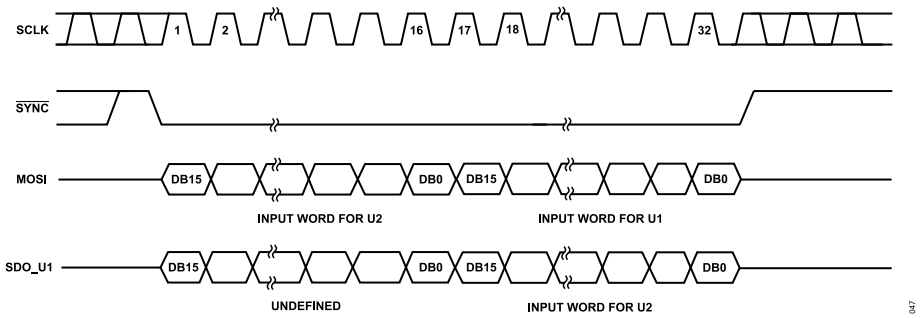

Figure 45. Daisy-Chain Diagram

Downloaded from Arrow.com.

THEORY OF OPERATION

I²C SERIAL DATA INTERFACE

The AD5124/AD5144 have 2-wire, I²C-compatible serial interfaces. These devices can be connected to an I²C bus as a target device, under the control of a controller device. See Figure 5 for a timing diagram of a typical write sequence.

The AD5124/AD5144 support standard (100 kHz) and fast (400 kHz) data transfer modes. Support is not provided for 10-bit addressing and general call addressing.

The 2-wire serial bus protocol operates as follows:

1. The controller initiates a data transfer by establishing a start condition, which is when a high-to-low transition on the SDA line occurs while SCL is high. The following byte is the address byte, which consists of the 7-bit target address and an R/$\overline{W}$ bit. The target device corresponding to the transmitted address responds by pulling SDA low during the ninth clock pulse (this is called the acknowledge bit). At this stage, all other devices on the bus remain idle while the selected device waits for data to be written to, or read from, its shift register. If the R/$\overline{W}$ bit is set high, the controller reads from the target device. However, if the R/$\overline{W}$ bit is set low, the controller writes to the target device.
2. Data is transmitted over the serial bus in sequences of nine clock pulses (eight data bits followed by an acknowledge bit). The transitions on the SDA line must occur during the low period of SCL and remain stable during the high period of SCL.
3. When all data bits have been read from or written to, a stop condition is established. In write mode, the controller pulls the SDA line high during the tenth clock pulse to establish a stop condition. In read mode, the controller issues a no acknowledge for the ninth clock pulse (that is, the SDA line remains high). The controller then brings the SDA line low before the tenth clock pulse, and then high again during the tenth clock pulse to establish a stop condition.

I²C Address

The AD5124/AD5144 each have two different device address options available (see Table 15 and Table 16).

Table 15. 20-Lead TSSOP Device Address Selection

ADDR	7-Bit I²C Device Address
V_{LOGIC}	0101000
No connect[1]	0101010
GND	0101011

[1] Not available in bipolar mode (V_{SS} < 0 V) or in low voltage mode (V_{LOGIC} = 1.8 V).

Table 16. 24-Lead LFCSP Device Address Selection

ADDR0 Pin	ADDR1 Pin	7-Bit I²C Device Address
V_{LOGIC}	V_{LOGIC}	0100000
No connect[1]	V_{LOGIC}	0100010
GND	V_{LOGIC}	0100011
V_{LOGIC}	No connect[1]	0101000
No connect[1]	No connect[1]	0101010
GND	No connect[1]	0101011
V_{LOGIC}	GND	0101100
No connect[1]	GND	0101110
GND	GND	0101111

[1] Not available in bipolar mode (V_{SS} < 0 V) or in low voltage mode (V_{LOGIC} = 1.8 V).

Write Operation

When writing to the AD5124/AD5144/AD5144A, the user must begin with a start command followed by an address byte (R/$\overline{W}$ = 0), after which the device acknowledges that it is prepared to receive data by pulling SDA low.

Two bytes of data are then written to the DAC, the most significant byte followed by the least significant byte. Both of these data bytes are acknowledged by the AD5124/AD5144/AD5144A. A stop condition follows. The write operations for the AD5124/AD5144/AD5144A are shown in Figure 46 and Figure 47.

A repeated write function gives the user flexibility to update the device a number of times after addressing the device only once, as shown in Figure 47.

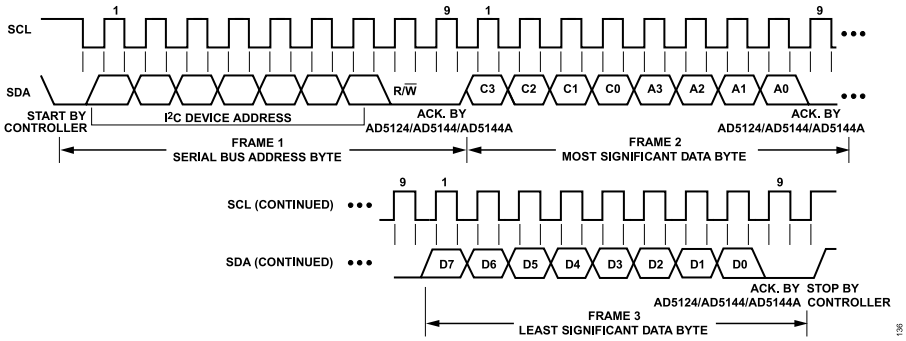

Figure 46. AD5124/AD5144/AD5144A Interface Write Command

Downloaded from Arrow.com.

THEORY OF OPERATION

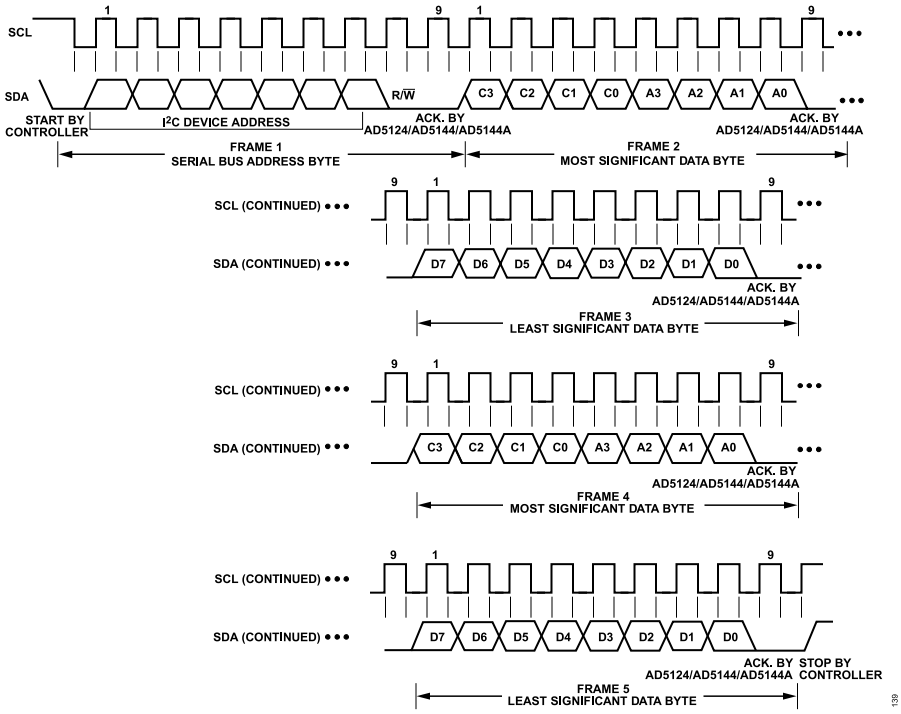

Figure 47. AD5124/AD5144/AD5144A Interface Multiple Write

Downloaded from Arrow.com.

THEORY OF OPERATION

EEPROM Write Acknowledge Polling

After each write operation to the EEPROM, an internal write cycle begins. The I²C interface of the device is disabled. To determine if the internal write cycle is complete and the I²C interface is enabled, interface polling can be executed. I²C interface polling can be conducted by sending a start condition, followed by the target address and the write bit. If the I²C interface responds with an acknowledge, the write cycle is complete, and the interface is ready to proceed with further operations. Otherwise, I²C interface polling can be repeated until it succeeds.

Read Operation

The AD5124/AD5144/AD5144A allow readback of the contents of the RDAC register and EEPROM memory through the I²C interface by using Command 3 (see Table 17).

When reading data back from the AD5124/AD5144/AD5144A, the user must first issue a readback command to the device. The readback begins with a start command, followed by an address byte (R/$\overline{W}$ = 0), after which the device acknowledges that it is prepared to receive data by pulling SDA low.

Two bytes of data are then written to the AD5124/AD5144/AD5144A, the most significant byte followed by the least significant byte. Both of these data bytes are acknowledged by the AD5124/AD5144/AD5144A. A stop condition follows. These bytes contain the read instruction, which enables readback of the RDAC register and EEPROM memory. The user can then read back the data. The readback begins with a start command followed by an address byte (R/$\overline{W}$ = 1), after which the device acknowledges that it is prepared to transmit data by pulling SDA low. Two bytes of data are then read from the device, which are both acknowledged by the controller, as shown in Figure 48. A stop condition follows. If the controller does not acknowledge the first byte, the second byte is not transmitted by the AD5124/AD5144/AD5144A.

The AD5124/AD5144/AD5144A do not support repeat readback.

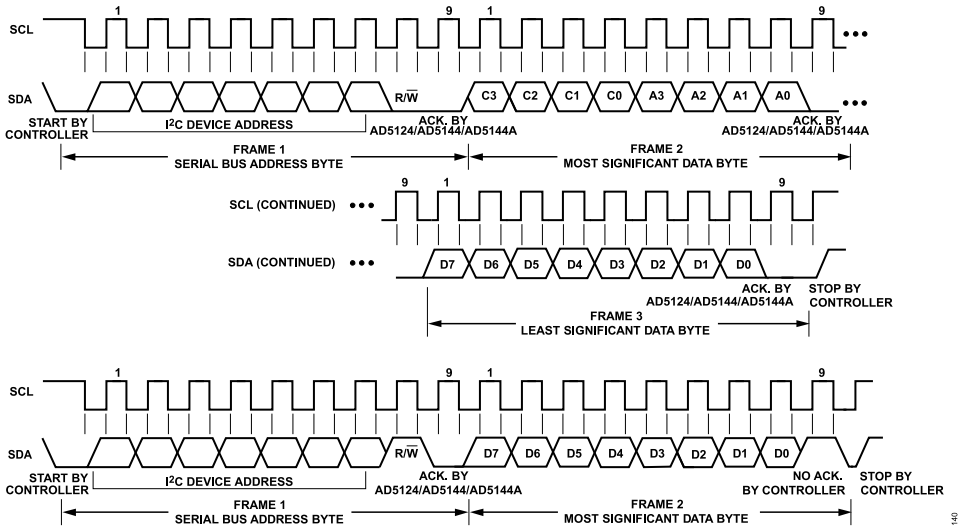

Figure 48. AD5124/AD5144/AD5144A Interface Read Command

Downloaded from Arrow.com.

THEORY OF OPERATION

ADVANCED CONTROL MODES

The AD5124/AD5144/AD5144A digital potentiometers include a set of user programming features to address the wide number of applications for these universal adjustment devices (see Table 17 and Table 19).

Key programming features include the following:

- Input register
- Linear gain setting mode
- Low wiper resistance feature
- Linear increment and decrement instructions
- ±6 dB increment and decrement instructions
- Burst mode (I^2C only)
- Reset
- Shutdown mode

Table 17. Advanced Command Operation Truth Table

Command Number	Control Bits[DB15:DB12]				Address Bits[DB11:DB8][1]				Data Bits[DB7:DB0][1]								Operation
	C3	C2	C1	C0	A3	A2	A1	A0	D7	D6	D5	D4	D3	D2	D1	D0	
0	0	0	0	0	X	X	X	X	X	X	X	X	X	X	X	X	NOP: do nothing
1	0	0	0	1	A3	A2	A1	A0	D7	D6	D5	D4	D3	D2	D1	D0[2]	Write contents of serial register data to RDAC
2	0	0	1	0	A3	A2	A1	A0	D7	D6	D5	D4	D3	D2	D1	D0[2]	Write contents of serial register data to input register
3	0	0	1	1	X	A2	A1	A0	X	X	X	X	X	X	D1	D0	Read back contents D1 D0 Data 0 0 Input register 0 1 EEPROM 1 0 Control register 1 1 RDAC
4	0	1	0	0	A3	A2	A1	A0	X	X	X	X	X	X	X	1	Linear RDAC increment
5	0	1	0	0	A3	A2	A1	A0	X	X	X	X	X	X	X	0	Linear RDAC decrement
6	0	1	0	1	A3	A2	A1	A0	X	X	X	X	X	X	X	1	+6 dB RDAC increment
7	0	1	0	1	A3	A2	A1	A0	X	X	X	X	X	X	X	0	−6 dB RDAC decrement
8	0	1	1	0	A3	A2	A1	A0	X	X	X	X	X	X	X	X	Copy input register to RDAC (software LRDAC)
9	0	1	1	1	0	0	A1	A0	X	X	X	X	X	X	X	1	Copy RDAC register to EEPROM
10	0	1	1	1	0	0	A1	A0	X	X	X	X	X	X	X	0	Copy EEPROM into RDAC
11	1	0	0	0	0	0	A1	A0	D7	D6	D5	D4	D3	D2	D1	D0[2]	Write contents of serial register data to EEPROM
12	1	0	0	1	A3	A2	A1	A0	1	X	X	X	X	X	X	D0	Top scale D0 = 1; enter D0 = 0; exit
13	1	0	0	1	A3	A2	A1	A0	0	X	X	X	X	X	X	D0	Bottom scale D0 = 1; enter D0 = 0; exit
14	1	0	1	1	X	X	X	X	X	X	X	X	X	X	X	X	Software reset
15	1	1	0	0	A3	A2	A1	A0	X	X	X	X	X	X	X	D0	Software shutdown D0 = 0; normal mode D0 = 1; device placed in shutdown mode
16	1	1	0	1	X	X	X	X	X	X	X	X	D3	D2	D1	D0	Copy serial register data to control register, refer to Table 19.

[1] X = don't care.

[2] D0 = don't care for AD5124.

Downloaded from Arrow.com.

THEORY OF OPERATION

Table 18. Address Bits

				Potentiometer Mode		Linear Gain Setting Mode		
A3	A2	A1	A0	Input Register	RDAC Register	Input Register	RDAC Register	Stored RDAC Memory
1	X[1]	X[1]	X[1]	All channels	All channels	All channels	All channels	Not applicable
0	0	0	0	RDAC1	RDAC1	R_{WB1}	R_{WB1}	RDAC1
0	1	0	0	Not applicable	Not applicable	R_{AW1}	R_{AW1}	Not applicable
0	0	0	1	RDAC2	RDAC2	R_{WB2}	R_{WB2}	RDAC2
0	1	0	1	Not applicable	Not applicable	R_{AW2}	R_{AW2}	Not applicable
0	0	1	0	RDAC3	RDAC3	R_{WB3}	R_{WB3}	RDAC3
0	1	1	0	Not applicable	Not applicable	R_{AW3}	R_{AW3}	Not applicable
0	0	1	1	RDAC4	RDAC4	R_{WB4}	R_{WB4}	RDAC4
0	1	1	1	Not applicable	Not applicable	R_{AW4}	R_{AW4}	Not applicable

[1] X = don't care.

Table 19. Control Register Bit Descriptions

Bit Name	Description
D0	RDAC register write protect 0 = wiper position frozen to value in EEPROM memory 1 = allows update of wiper position through digital interface (default)
D1	EEPROM program enable 0 = EEPROM program disabled 1 = enables device for EEPROM program (default)
D2	Linear setting mode/potentiometer mode 0 = potentiometer mode (default) 1 = linear gain setting mode
D3	Burst mode (I^2C only) 0 = disabled (default) 1 = enabled (no disable after stop or repeat start condition)

Downloaded from Arrow.com.

THEORY OF OPERATION

Input Register

The AD5124/AD5144/AD5144A include one input register per RDAC register. These registers allow preloading of the value for the associated RDAC register. These registers can be written to using Command 2 and read back from using Command 3 (see Table 17).

This feature allows a synchronous and asynchronous update of one or all of the RDAC registers at the same time.

The transfer from the input register to the RDAC register is done asynchronously by the $\overline{LRDAC}$ pin or synchronously by Command 8 (see Table 17).

If new data is loaded into an RDAC register, this RDAC register automatically overwrites the associated input register.

Linear Gain Setting Mode

The proprietary architecture of the AD5124/AD5144/AD5144A allows the independent control of each string resistor, R_{AW}, and R_{WB}. To enable this feature, use Command 16 (see Table 17) to set Bit D2 of the control register (see Table 19).

This mode of operation can control the potentiometer as two independent rheostats connected at a single point, the W terminal.

This feature enables a second input and an RDAC register per channel, as shown in Table 18, but the actual RDAC contents remain unchanged. The same operations are valid for potentiometer and linear gain setting modes. The EEPROM commands affect the R_{WB} resistance only. The parts restores in potentiometer mode after a reset or power-up.

Low Wiper Resistance Feature

The AD5124/AD5144/AD5144A include two commands to reduce the wiper resistance between the terminals when the devices achieve full scale or zero scale. These extra positions are called bottom scale, BS, and top scale, TS. The resistance between Terminal A and Terminal W at top scale is specified as R_{TS}. Similarly, the bottom scale resistance between Terminal B and Terminal W is specified as R_{BS}.

The contents of the RDAC registers are unchanged by entering into these positions. There are three ways to exit from top scale and bottom scale: by using Command 12 or Command 13 (see Table 17); by loading new data in an RDAC register, which includes increment/decrement operations; or by entering shutdown mode, Command 15 (see Table 17).

Table 20 and Table 21 show the truth tables for the top scale position and the bottom scale position, respectively, when the potentiometer or linear gain setting mode is enabled.

Table 20. Top Scale Truth Table

Linear Gain Setting Mode		Potentiometer Mode	
R_{AW}	R_{WB}	R_{AW}	R_{WB}
R_{AB}	R_{AB}	R_{TS}	R_{AB}

Table 21. Bottom Scale Truth Table

Linear Gain Setting Mode		Potentiometer Mode	
R_{AW}	R_{WB}	R_{AW}	R_{WB}
R_{TS}	R_{BS}	R_{AB}	R_{BS}

Linear Increment and Decrement Instructions

The increment and decrement commands (Command 4 and Command 5 in Table 17) are useful for linear step adjustment applications. These commands simplify microcontroller software coding by allowing the controller to send an increment or decrement command to the device. The adjustment can be individual or in a ganged potentiometer arrangement, where all wiper positions are changed at the same time.

For an increment command, executing Command 4 automatically moves the wiper to the next RDAC position. This command can be executed in a single channel or multiple channels.

±6 dB Increment and Decrement Instructions

Two programming instructions produce logarithmic taper increment or decrement of the wiper position control by an individual potentiometer or by a ganged potentiometer arrangement where all RDAC register positions are changed simultaneously. The +6 dB increment is activated by Command 6, and the −6 dB decrement is activated by Command 7 (see Table 17). For example, starting with the zero-scale position and executing Command 6 ten times moves the wiper in 6 dB steps to the full-scale position. When the wiper position is near the maximum setting, the last 6 dB increment instruction causes the wiper to go to the full-scale position (see Table 22).

Incrementing the wiper position by +6 dB essentially doubles the RDAC register value, whereas decrementing the wiper position by −6 dB halves the register value. Internally, the AD5124/AD5144/AD5144A use shift registers to shift the bits left and right to achieve a ±6 dB increment or decrement. These functions are useful for various audio/video level adjustments, especially for white LED brightness settings in which human visual responses are more sensitive to large adjustments than to small adjustments.

Table 22. Detailed Left Shift and Right Shift Functions for the ±6 dB Step Increment and Decrement

Left Shift (+6 dB/Step)	Right Shift (−6 dB/Step)
0000 0000	1111 1111
0000 0001	0111 1111
0000 0010	0011 1111
0000 0100	0001 1111
0000 1000	0000 1111
0001 0000	0000 0111
0010 0000	0000 0011
0100 0000	0000 0001
1000 0000	0000 0000
1111 1111	0000 0000

Downloaded from Arrow.com.

THEORY OF OPERATION

Burst Mode (I^2C Only)

By enabling the burst mode, multiple data bytes can be sent to the part consecutively. After the command byte, the part interprets the following consecutive bytes as data bytes for the command.

A new command can be sent by generating a repeat start or by a stop and start condition.

The burst mode is activated by setting Bit D3 of the control register (see Table 19).

Reset

The AD5124/AD5144/AD5144A can be reset through software by executing Command 14 (see Table 17) or through hardware on the low pulse of the $\overline{RESET}$ pin. The reset command loads the RDAC register with the contents of the EEPROM and takes approximately 30 µs. The EEPROM is preloaded to midscale at the factory, and initial power-up is, accordingly, at midscale. Tie $\overline{RESET}$ to V_{DD} if the $\overline{RESET}$ pin is not used.

Shutdown Mode

The AD5124/AD5144/AD5144A can be placed in shutdown mode by executing the software shutdown command, Command 15 (see Table 17), and setting the LSB (D0) to 1. This feature places the RDAC in a zero power consumption state where the device operates in potentiometer mode, Terminal A is open circuited, and the wiper, Terminal W, is connected to Terminal B; however, a finite wiper resistance of 40 Ω is present. When the device is configured in linear gain setting mode, the resistor addressed, R_{AW} or R_{WB}, is internally placed at high impedance. Table 23 shows a truth table depending on the device operating mode. The contents of the RDAC register are unchanged by entering shutdown mode. However, all commands listed in Table 17 are supported while in shutdown mode. Execute Command 15 (see Table 17) and set the LSB (D0) to 0 to exit shutdown mode.

Table 23. Shutdown Mode Truth Table

Linear Gain Setting Mode		Potentiometer Mode	
R_{AW}	R_{WB}	R_{AW}	R_{WB}
High impedance	High impedance	High impedance	R_{BS}

EEPROM OR RDAC REGISTER PROTECTION

The EEPROM and RDAC registers can be protected by disabling any update to these registers. This can be done by using software or by using hardware. If these registers are protected by software, set Bit D0 and/or Bit D1 (see Table 19), which protects the RDAC and EEPROM registers independently.

If the registers are protected by hardware, pull the $\overline{WP}$ pin low (only available in the LFCSP package). If the $\overline{WP}$ pin is pulled low when the part is executing a command, the protection is not enabled until the command is completed (only available in the LFCSP package).

When RDAC is protected, the only operation allowed is to copy the EEPROM into the RDAC register.

LOAD RDAC INPUT REGISTER ($\overline{LRDAC}$)

$\overline{LRDAC}$ software or hardware transfers data from the input register to the RDAC register (and therefore updates the wiper position). By default, the input register has the same value as the RDAC register; therefore, only the input register that has been updated using Command 2 is updated.

Software $\overline{LRDAC}$, Command 8, allows updating of a single RDAC register or all of the channels at once (see Table 17). This is a synchronous update.

The hardware $\overline{LRDAC}$ is completely asynchronous and copies the content of all the input registers into the associated RDAC registers. If a command is being executed, any transition in the $\overline{LRDAC}$ pin is ignored by the part to avoid data corruption.

RDAC ARCHITECTURE

To achieve optimum performance, Analog Devices, Inc., has proprietary RDAC segmentation architecture for all the digital potentiometers. In particular, the AD5124/AD5144 employ a three-stage segmentation approach, as shown in Figure 49. The AD5124/AD5144/AD5144A wiper switch is designed with the transmission gate CMOS topology and with the gate voltage derived from V_{DD} and V_{SS}.

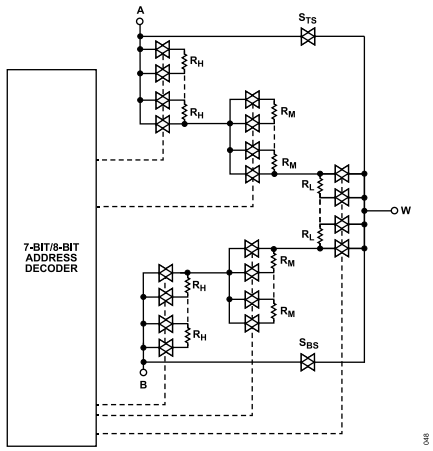

Figure 49. AD5124/AD5144/AD5144A Simplified RDAC Circuit

Top Scale/Bottom Scale Architecture

In addition, the AD5124/AD5144/AD5144A include new positions to reduce the resistance between terminals. These positions are called bottom scale and top scale. At bottom scale, the typical wiper resistance decreases from 130 Ω to 60 Ω (R_{AB} = 100 kΩ). At top scale, the resistance between Terminal A and Terminal W is decreased by 1 LSB, and the total resistance is reduced to 60 Ω (R_{AB} = 100 kΩ).

Downloaded from Arrow.com.

THEORY OF OPERATION

PROGRAMMING THE VARIABLE RESISTOR

Rheostat Operation—±8% Resistor Tolerance

The AD5124/AD5144/AD5144A operate in rheostat mode when only two terminals are used as a variable resistor. The unused terminal can be floating, or it can be tied to Terminal W, as shown in Figure 50.

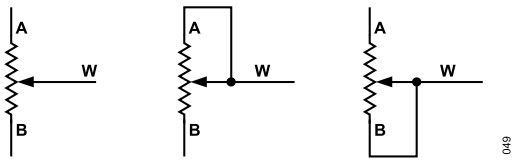

Figure 50. Rheostat Mode Configuration

The nominal resistance between Terminal A and Terminal B, R_{AB}, is 10 kΩ or 100 kΩ, and has 128/256 tap points accessed by the wiper terminal. The 7-bit/8-bit data in the RDAC latch is decoded to select one of the 128/256 possible wiper settings. The general equations for determining the digitally programmed output resistance between Terminal W and Terminal B are

AD5124:

$$R_{WB}(D) = \frac{D}{128} \times R_{AB} + R_W \quad \text{From 0x00 to 0x7F} \tag{1}$$

AD5144/AD5144A:

$$R_{WB}(D) = \frac{D}{256} \times R_{AB} + R_W \quad \text{From 0x00 to 0xFF} \tag{2}$$

where:
D is the decimal equivalent of the binary code in the 7-bit/8-bit RDAC register.
R_{AB} is the end-to-end resistance.
R_W is the wiper resistance.

In potentiometer mode, similar to the mechanical potentiometer, the resistance between Terminal W and Terminal A also produces a digitally controlled complementary resistance, R_{AW}. R_{AW} also gives a maximum of 8% absolute resistance error. R_{AW} starts at the maximum resistance value and decreases as the data loaded into the latch increases. The general equations for this operation are

AD5124:

$$R_{AW}(D) = \frac{128 - D}{128} \times R_{AB} + R_W \quad \text{From 0x00 to 0x7F} \tag{3}$$

AD5144/AD5144A:

$$R_{AW}(D) = \frac{256 - D}{256} \times R_{AB} + R_W \quad \text{From 0x00 to 0xFF} \tag{4}$$

where:
D is the decimal equivalent of the binary code in the 7-bit/8-bit RDAC register.
R_{AB} is the end-to-end resistance.
R_W is the wiper resistance.

If the part is configured in linear gain setting mode, the resistance between Terminal W and Terminal A is directly proportional to the code loaded in the associate RDAC register. The general equations for this operation are

AD5124:

$$R_{WB}(D) = \frac{D}{128} \times R_{AB} + R_W \quad \text{From 0x00 to 0x7F} \tag{5}$$

AD5144/AD5144A:

$$R_{WB}(D) = \frac{D}{256} \times R_{AB} + R_W \quad \text{From 0x00 to 0xFF} \tag{6}$$

where:
D is the decimal equivalent of the binary code in the 7-bit/8-bit RDAC register.
R_{AB} is the end-to-end resistance.
R_W is the wiper resistance.

In the bottom scale condition or top scale condition, a finite total wiper resistance of 40 Ω is present. Regardless of which setting the part is operating in, limit the current between Terminal A to Terminal B, Terminal W to Terminal A, and Terminal W to Terminal B to the maximum continuous current of ±6 mA or to the pulse current specified in Table 7. Otherwise, degradation or possible destruction of the internal switch contact can occur.

PROGRAMMING THE POTENTIOMETER DIVIDER

Voltage Output Operation

The digital potentiometer easily generates a voltage divider at wiper-to-B and wiper-to-A that is proportional to the input voltage at A to B, as shown in Figure 51.

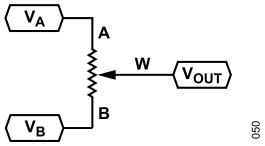

Figure 51. Potentiometer Mode Configuration

Connecting Terminal A to 5 V and Terminal B to ground produces an output voltage at the Wiper W to Terminal B ranging from 0 V to 5 V. The general equation defining the output voltage at V_W with respect to ground for any valid input voltage applied to Terminal A and Terminal B is

$$V_w(D) = \frac{R_{WB}(D)}{R_{AB}} \times V_A + \frac{R_{AW}(D)}{R_{AB}} \times V_B \tag{7}$$

where:
$R_{WB}(D)$ can be obtained from Equation 1 and Equation 2.
$R_{AW}(D)$ can be obtained from Equation 3 and Equation 4.

Operation of the digital potentiometer in the divider mode results in a more accurate operation over temperature. Unlike the rheostat mode, the output voltage is dependent mainly on the ratio of the

Downloaded from Arrow.com.

THEORY OF OPERATION

internal resistors, R_{AW} and R_{WB}, and not the absolute values. Therefore, the temperature drift reduces to 5 ppm/°C.

TERMINAL VOLTAGE OPERATING RANGE

The AD5124/AD5144/AD5144A are designed with internal ESD diodes for protection. These diodes also set the voltage boundary of the terminal operating voltages. Positive signals present on Terminal A, Terminal B, or Terminal W that exceed V_{DD} are clamped by the forward-biased diode. There is no polarity constraint between V_A, V_W, and V_B, but they cannot be higher than V_{DD} or lower than V_{SS}.

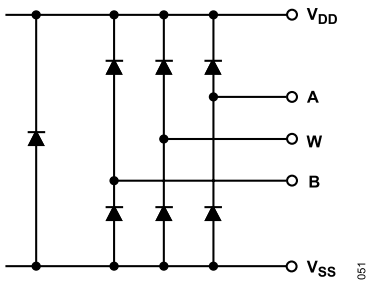

Figure 52. Maximum Terminal Voltages Set by V_{DD} and V_{SS}

POWER-UP SEQUENCE

Because there are diodes to limit the voltage compliance at Terminal A, Terminal B, and Terminal W (see Figure 52), it is important to power up V_{DD} first before applying any voltage to Terminal A, Terminal B, and Terminal W. Otherwise, the diode is forward-biased such that V_{DD} is powered unintentionally. The ideal power-up sequence is V_{SS}, V_{DD}, V_{LOGIC}, digital inputs, and V_A, V_B, and V_W. The order of powering V_A, V_B, V_W, and digital inputs is not important as long as they are powered after V_{SS}, V_{DD}, and V_{LOGIC}. Regardless of the power-up sequence and the ramp rates of the power supplies, once V_{DD} is powered, the power-on preset activates, which restores EEPROM values to the RDAC registers.

LAYOUT AND POWER SUPPLY BIASING

It is always a good practice to use a compact, minimum lead length layout design. Ensure that the leads to the input are as direct as possible with a minimum conductor length. Ground paths should have low resistance and low inductance. It is also good practice to bypass the power supplies with quality capacitors. Apply low equivalent series resistance (ESR) 1 µF to 10 µF tantalum or electrolytic capacitors at the supplies to minimize any transient disturbance and to filter low frequency ripple. Figure 53 illustrates the basic supply bypassing configuration for the AD5124/AD5144/AD5144A.

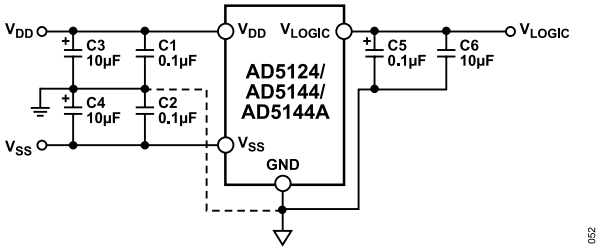

Figure 53. Power Supply Bypassing

Downloaded from Arrow.com.

OUTLINE DIMENSIONS

Package Drawing (Option)	Package Type	Package Description
CP-24-10	LFCSP	24-Lead Lead Frame Chip Scale Package
RU-20	TSSOP	20-Lead Thin Shrink Small Outline Package

For the latest package outline information and land patterns (footprints), go to Package Index.

Updated: September 01, 2026

ORDERING GUIDE

Model[1]	Temperature Range	Package Description	Packing Quantity	Package Option
AD5124BCPZ100-RL7	-40°C to +125°C	24-Lead LFCSP (4mm x 4mm x 0.75mm w/ EP)	REEL, 1500	CP-24-10
AD5124BCPZ10-RL7	-40°C to +125°C	24-Lead LFCSP (4mm x 4mm x 0.75mm w/ EP)	REEL, 1500	CP-24-10
AD5124BRUZ10	-40°C to +125°C	20-Lead TSSOP	TUBE, 75	RU-20
AD5124BRUZ100	-40°C to +125°C	20-Lead TSSOP	TUBE, 75	RU-20
AD5124BRUZ100-RL7	-40°C to +125°C	20-Lead TSSOP	REEL, 1000	RU-20
AD5124BRUZ10-RL7	-40°C to +125°C	20-Lead TSSOP	REEL, 1000	RU-20
AD5144ABRUZ10	-40°C to +125°C	20-Lead TSSOP	TUBE, 75	RU-20
AD5144ABRUZ100	-40°C to +125°C	20-Lead TSSOP	TUBE, 75	RU-20
AD5144ABRUZ100-RL7	-40°C to +125°C	20-Lead TSSOP	REEL, 1000	RU-20
AD5144ABRUZ10-RL7	-40°C to +125°C	20-Lead TSSOP	REEL, 1000	RU-20
AD5144BCPZ100-RL7	-40°C to +125°C	24-Lead LFCSP (4mm x 4mm x 0.75mm w/ EP)	REEL, 1500	CP-24-10
AD5144BCPZ10-RL7	-40°C to +125°C	24-Lead LFCSP (4mm x 4mm x 0.75mm w/ EP)	REEL, 1500	CP-24-10
AD5144BRUZ10	-40°C to +125°C	20-Lead TSSOP	TUBE, 75	RU-20
AD5144BRUZ100	-40°C to +125°C	20-Lead TSSOP	TUBE, 75	RU-20
AD5144BRUZ100-RL7	-40°C to +125°C	20-Lead TSSOP	REEL, 1000	RU-20
AD5144BRUZ10-RL7	-40°C to +125°C	20-Lead TSSOP	REEL, 1000	RU-20

[1] Z = RoHS Compliant Part.

R_{AB} (KΩ), RESOLUTION, AND INTERFACE OPTIONS

Model[1]	R_{AB} (kΩ)	Resolution	Interface
AD5124BCPZ10-RL7	10	128	SPI/I^2C
AD5124BCPZ100-RL7	100	128	SPI/I^2C
AD5124BRUZ10	10	128	SPI
AD5124BRUZ100	100	128	SPI
AD5124BRUZ10-RL7	10	128	SPI
AD5124BRUZ100-RL7	100	128	SPI
AD5144BCPZ10-RL7	10	256	SPI/I^2C
AD5144BCPZ100-RL7	100	256	SPI/I^2C
AD5144BRUZ10	10	256	SPI
AD5144BRUZ100	100	256	SPI
AD5144BRUZ10-RL7	10	256	SPI
AD5144BRUZ100-RL7	100	256	SPI
AD5144ABRUZ10	10	256	I^2C
AD5144ABRUZ100	100	256	I^2C
AD5144ABRUZ10-RL7	10	256	I^2C
AD5144ABRUZ100-RL7	100	256	I^2C

[1] Z = RoHS Compliant Part.

Downloaded from Arrow.com.

OUTLINE DIMENSIONS

EVALUATION BOARDS

Model[1, 2]	Description
EVAL-AD5144DBZ	Evaluation Board

[1] Z = RoHS Compliant Part.

[2] The evaluation board is shipped with the 10 kΩ R_{AB} resistor option; however, the board is compatible with both of the available resistor value options.

I^2C refers to a communications protocol originally developed by Philips Semiconductors (now NXP Semiconductors).

Legal Terms and Conditions
Analog Devices, Inc. (“ADI”) believes the information in this data sheet is accurate and reliable as of its date of publication and provides it “as is” without any representation or warranty of any kind. ADI reserves the right to make changes, corrections, modifications, enhancements, improvements, and other updates to the information described in this data sheet, with use of the product subject to ADI’s Terms and Conditions of Sale, available on Analog.com. ANALOG DEVICES word mark and logo, AD, and ADI are registered trademarks and trademarks owned by ADI. This data sheet, trademarks, and its content are owned by ADI and may not be reproduced, distributed, or used except with ADI’s prior written authorization. TO THE MAXIMUM EXTENT PERMITTED BY LAW, IN NO EVENT SHALL ADI BE LIABLE FOR ANY DAMAGES WHATSOEVER, WHETHER DIRECT OR INDIRECT, ARISING OUT OF OR IN CONNECTION WITH THE USE OF, INABILITY TO USE, OR RELIANCE UPON THIS DATA SHEET OR THE INFORMATION CONTAINED HEREIN.

Downloaded from Arrow.com.