390-011
Splash-Proof EMI/RFI Cable Sealing Backshell
Light-Duty with Strain Relief
Type C - Rotatable Coupling - Standard Profile

CONNECTOR DESIGNATORS

A-F-H-L-S

ROTATABLE COUPLING

TYPE C OVERALL SHIELD TERMINATION

390 F K 011 M 16 05 L

- Product Series
- Connector Designator
- Angle and Profile
  - K = 45°
  - L = 90°
  - See 39-38 for straight
- Strain Relief Style (L, G)
- Cable Entry (Table IV)
- Shell Size (Table I)
- Finish (Table II)
- Basic Part No.

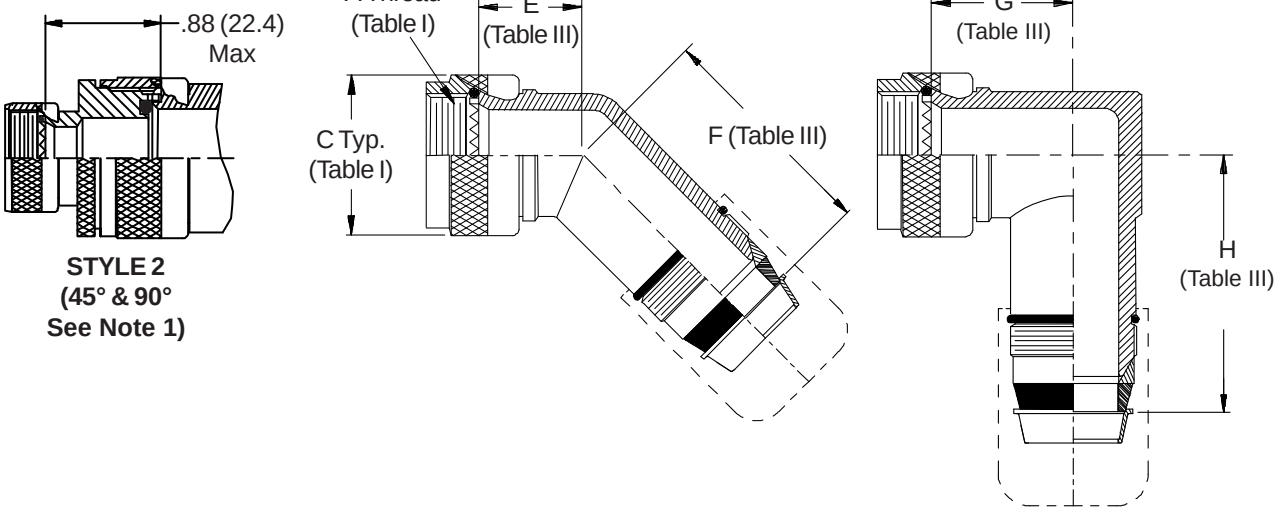

STYLE 2 (45° & 90° See Note 1)

STYLE L
Light Duty
(Table IV)

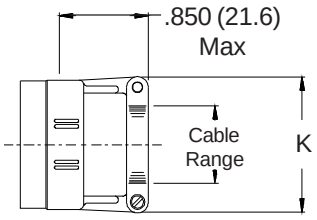

STYLE G
Light Duty
(Table IV)

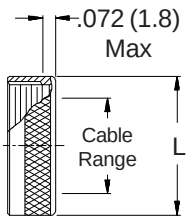

-445 Now Available with the "NESTOR"

Add "-445" to Specify Glenair's Non-Detent, Spring-Loaded, Self-Locking Coupling. See Page 41 for Details.

© 2005 Glenair, Inc.

Downloaded from Arrow.com.

See inside back cover fold-out or pages 13 and 14 for Tables I and II.

TABLE III: ELBOW DIMENSIONS

Shell Size Conn. Desig.		E		F		G		H	
A-F-L-S	H	±.062	±(1.6)	±.062	±(1.6)	±.062	±(1.6)	±.062	±(1.6)
08	09	.398	(10.1)	2.210	(56.1)	.438	(11.1)	2.080	(52.8)
10	11	.458	(11.6)	2.270	(57.7)	.533	(13.5)	2.120	(53.8)
12	13	.518	(13.2)	2.330	(59.2)	.548	(13.9)	2.090	(53.1)
14	15	.588	(14.9)	2.420	(61.5)	.638	(16.2)	2.090	(53.1)
16	17	.678	(17.2)	2.530	(64.3)	.823	(20.9)	2.130	(54.1)
18	19	.868	(22.0)	2.720	(69.1)	.913	(23.2)	2.250	(57.2)
20	21	.868	(22.0)	2.720	(69.1)	.913	(23.2)	2.180	(55.4)
22	23	.958	(24.3)	2.870	(72.9)	1.063	(27.0)	2.240	(56.9)
24	25	.958	(24.3)	2.870	(72.9)	1.063	(27.0)	2.170	(55.1)
28		1.041	(26.4)	3.020	(76.7)	1.230	(31.2)	2.320	(58.9)
32		1.092	(27.7)	3.270	(83.1)	1.610	(40.9)	2.570	(65.3)
36		1.138	(28.9)	3.500	(88.9)	1.720	(43.7)	2.800	(71.1)

TABLE IV: CABLE ENTRY

Dash No.	K Max		L Max		Cable Range Min		Cable Range Max	
01	.781	(19.8)	.593	(15.1)	.062	(1.6)	.125	(3.2)
02	.968	(24.6)	.718	(18.2)	.125	(3.2)	.250	(6.4)
03	1.046	(26.6)	.843	(21.4)	.250	(6.4)	.375	(9.5)
04	1.156	(29.4)	.968	(24.6)	.375	(9.5)	.500	(12.7)
05	1.218	(30.9)	1.109	(28.2)	.500	(12.7)	.625	(15.9)
06	1.343	(34.1)	1.218	(30.9)	.625	(15.9)	.750	(19.1)
07	1.468	(37.3)	1.343	(34.1)	.750	(19.1)	.875	(22.2)
08	1.593	(40.5)	1.468	(37.3)	.875	(22.2)	1.000	(25.4)
09	1.718	(43.6)	1.593	(40.5)	1.000	(25.4)	1.125	(28.6)
10	1.843	(46.8)	1.718	(43.6)	1.125	(28.6)	1.250	(31.8)

1. When maximum cable entry (page 21) is exceeded, Style 2 will be supplied. Dimensions E, F, G and H will not apply. Please consult factory.
2. Metric dimensions (mm) are indicated in parentheses.
3. Cable range is defined as the accommodations range for the wire bundle or cable. Dimensions shown are not intended for inspection criteria.
4. Consult factory for shorter lengths on straight backshells.
5. Interface O-Ring not supplied with Connector Designator A.
6. -445 modification not available on MIL-DTL-38999 Series II.

© 2005 Glenair, Inc.

Downloaded from Arrow.com.