TRACO POWER

DC/DC Railway Converter

TEN 60WIR Series, 60 Watt

- **Compact 2”x1” package (without heatsink)**
- **Wide 4:1 input voltage range: 9–36, 18–75, 36–160 VDC**
- **EN 50155 and EN 61373 approval for railway applications**
- **Qualification for fire behavior according to EN 45545-2**
- **Operating temperature range –40°C to +85°C**
- **I/O-isolation 3‘000 VDC**
- **High efficiency up to 92%**
- **Under voltage lock out circuit**
- **Adjustable output voltage and Remote On/Off**
- **3-year product warranty**

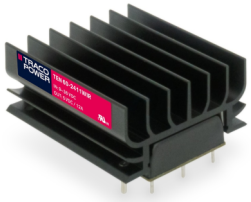

UL 62368-1 IEC 62368-1

The TEN 60WIR is a ruggedized 60 Watt railway approved DC/DC converter series with a wide 4:1 input voltage range and increased resistance against electromagnetic interference, shock/vibration and thermal shock. The standard version comes with a preassembled heatsink which was specifically designed for this 2” x 1” metal package converter. Together with a high efficiency of up to 92% this gives the converter an effective operating temperature range of -40° to +70°C without derating. The approvals according to standards EN 50155 and EN 61373 qualify them for railway and transportation systems. Additional qualification for the fire behavior of components according to EN 45545-2 and the safety approval according IEC/EN 62368-1, UL62368-1 support a potential compliance test of the application. All models offer an I/O-isolation voltage of 3’000 VDC and feature an active under voltage lockout function, remote on/off and adjustable outputs to ensure that these converters fit in any ruggedized application setup.

Models

Order Code	Input Voltage Range	Output 1 Vnom	Output 1 Imax	Output 2 Vnom	Output 2 Imax	Efficiency typ.
TEN 60-2411WIR	9 - 36 VDC (24 VDC nom.)	5 VDC	12'000 mA			91 %
TEN 60-2412WIR		12 VDC	5'000 mA			93 %
TEN 60-2413WIR		15 VDC	4'000 mA			93 %
TEN 60-2415WIR		24 VDC	2'500 mA			91 %
TEN 60-2418WIR		48 VDC	1'250 mA			92 %
TEN 60-2422WIR		+12 VDC	2'500 mA	–12 VDC	2'500 mA	91 %
TEN 60-2423WIR		+15 VDC	2'000 mA	–15 VDC	2'000 mA	91 %
TEN 60-2425WIR		+24 VDC	1'250 mA	–24 VDC	1'250 mA	92 %
TEN 60-4811WIR	18 - 75 VDC (48 VDC nom.)	5 VDC	12'000 mA			92 %
TEN 60-4812WIR		12 VDC	5'000 mA			93 %
TEN 60-4813WIR		15 VDC	4'000 mA			94 %
TEN 60-4815WIR		24 VDC	2'500 mA			92 %
TEN 60-4818WIR		48 VDC	1'250 mA			92 %
TEN 60-4822WIR		+12 VDC	2'500 mA	–12 VDC	2'500 mA	92 %
TEN 60-4823WIR		+15 VDC	2'000 mA	–15 VDC	2'000 mA	92 %
TEN 60-4825WIR		+24 VDC	1'250 mA	–24 VDC	1'250 mA	92 %
TEN 60-7211WIR	36 - 160 VDC (110 VDC nom.)	5 VDC	12'000 mA			91 %
TEN 60-7212WIR		12 VDC	5'000 mA			92 %
TEN 60-7213WIR		15 VDC	4'000 mA			92 %
TEN 60-7215WIR		24 VDC	2'500 mA			91 %
TEN 60-7218WIR		48 VDC	1'250 mA			91 %
TEN 60-7222WIR		+12 VDC	2'500 mA	–12 VDC	2'500 mA	91 %
TEN 60-7223WIR		+15 VDC	2'000 mA	–15 VDC	2'000 mA	91 %
TEN 60-7225WIR		+24 VDC	1'250 mA	–24 VDC	1'250 mA	91 %

Downloaded from Arrow.com.

Options

TEN-HS8	- Optional Heat Sink with Height = 0.3 inch: www.tracopower.com/overview/ten-hs8
on demand (backorder with MOQ non stocking item)	- Optional Heat Sink with Height = 0.8 inch: www.tracopower.com/overview/ten-hs10 - Optional Heat Sink with Height = 0.5 inch: www.tracopower.com/overview/ten-hs9 - Optional models without heatsink

Input Specifications

Input Current	- At no load	24 Vin models:	**15 mA typ.**
		48 Vin models:	**15 mA typ.**
		110 Vin models:	**15 mA typ.**
Surge Voltage		24 Vin models:	**50 VDC max.** (1 s max.)
		48 Vin models:	**100 VDC max.** (1 s max.)
		110 Vin models:	**200 VDC max.** (1 s max.)
Under Voltage Lockout		24 Vin models:	**7 VDC min. / 8 VDC typ. / 8.8 VDC max.**
		48 Vin models:	**15 VDC min. / 16 VDC typ. / 17.5 VDC max.**
		110 Vin models:	**32 VDC min. / 34 VDC typ. / 35.8 VDC max.**
Recommended Input Fuse		24 Vin models:	**10'000 mA** (fast acting)
		48 Vin models:	**6'300 mA** (slow blow)
		110 Vin models:	**3'150 mA** (slow blow)
			(The need of an external fuse has to be assessed in the final application.)
Input Filter			Internal Pi-Type

Output Specifications

Output Voltage Adjustment			**−10% to +20%** (15 & 24 Vout models) **±10%** (other models) (single output models only) (By external trim resistor)
		See application note:	www.tracopower.com/ten60wir-adj Output power must not exceed rated power!
Voltage Set Accuracy			**±1% max.**
Regulation	- Input Variation (Vmin - Vmax)	single output models:	**0.2% max.**
		dual output models:	**0.2% max.**
	- Load Variation (0 - 100%)	single output models:	**0.5% max.**
		dual output models:	**1% max.** (Output 1)
			1% max. (Output 2)
	- Cross Regulation (25% / 100% asym. load)	dual output models:	**5% max.**
Ripple and Noise (20 MHz Bandwidth)	- single output	5 Vout models:	**100 mVp-p max.** (w/ 1 µF X7R)
		12 Vout models:	**125 mVp-p max.** (w/ 1 µF X7R)
		15 Vout models:	**125 mVp-p max.** (w/ 1 µF X7R)
		24 Vout models:	**200 mVp-p max.** (w/ 1 µF X7R)
		48 Vout models:	**350 mVp-p max.** (w/ 1 µF X7R)
	- dual output	12 / -12 Vout models:	**125 / 125 mVp-p max.** (w/ 1 µF X7R)
		15 / -15 Vout models:	**125 / 125 mVp-p max.** (w/ 1 µF X7R)
		24 / -24 Vout models:	**200 / 200 mVp-p max.** (w/ 1 µF X7R)
	- single output	5 Vout models:	**75 mVp-p typ.** (w/ 1 µF X7R)
		12 Vout models:	**100 mVp-p typ.** (w/ 1 µF X7R)
		15 Vout models:	**100 mVp-p typ.** (w/ 1 µF X7R)
		24 Vout models:	**150 mVp-p typ.** (w/ 1 µF X7R)
		48 Vout models:	**300 mVp-p typ.** (w/ 1 µF X7R)
	- dual output	12 / -12 Vout models:	**100 / 100 mVp-p typ.** (w/ 1 µF X7R)
		15 / -15 Vout models:	**100 / 100 mVp-p typ.** (w/ 1 µF X7R)
		24 / -24 Vout models:	**150 / 150 mVp-p typ.** (w/ 1 µF X7R)

All specifications valid at nominal voltage, resistive full load and +25°C after warm-up time, unless otherwise stated.

Downloaded from Arrow.com.

Capacitive Load	- single output	5 Vout models:	17'000 µF max.
		12 Vout models:	3'000 µF max.
		15 Vout models:	1'900 µF max.
		24 Vout models:	730 µF max.
		48 Vout models:	190 µF max.
	- dual output	12 / -12 Vout models:	1'500 / 1'500 µF max.
		15 / -15 Vout models:	940 / 940 µF max.
		24 / -24 Vout models:	370 / 370 µF max.
Minimum Load			Not required
Temperature Coefficient			±0.02 %/K max.
Hold-up Time			10 ms min. (acc. to EN 50155 Class S2, see application note for ext. capacitor calculation: www.tracopower.com/info/holdup_en50155.pdf)
Start-up Time			30 ms typ. / 60 ms max.
Short Circuit Protection			Continuous, Automatic recovery
Output Current Limitation			150% typ. of Iout max.
Overvoltage Protection			124 - 133% of Vout nom. (By Zener diode)
Transient Response	- Response Time		250 µs typ. (25% Load Step)

Safety Specifications

Standards	- IT / Multimedia Equipment	EN 62368-1 IEC 62368-1 UL 62368-1
	- Railway Applications	EN 50155
	- Certification Documents	www.tracopower.com/ten60wir-safety-cert
Energy Source	- Output, acc. to 62368-1	ES1
Power Source	- Output, acc. to 62368-1	PS2
Pollution Degree		PD 2
Over Voltage Category		Not mains connected

EMC Specifications

EMI (Emissions)			EN 50121-3-2 (EMC for Rolling Stock)
	- Conducted Emissions		EN 55032 class A (with external filter)
			EN 55032 class B (with external filter)
	- Radiated Emissions		EN 55032 class A (with external filter)
			EN 55032 class B (with external filter)
		External filter proposal:	www.tracopower.com/ten60wir-emc-filter
EMS (Immunity)			EN 50121-3-2 (EMC for Rolling Stock)
			EN 55024 (IT Equipment)
			EN 55035 (Multimedia)
	- Electrostatic Discharge	Air:	EN 61000-4-2, ±8 kV, perf. criteria A
		Contact:	EN 61000-4-2, ±6 kV, perf. criteria A
	- RF Electromagnetic Field		EN 61000-4-3, 20 V/m, perf. criteria A
	- EFT (Burst) / Surge		EN 61000-4-4, ±2 kV, perf. criteria A
			EN 61000-4-5, ±2 kV, perf. criteria A
		Ext. input component:	24 Vin models: 2x KY 220 µF || TVS SMDJ58A 48 Vin models: 2x KY 220 µF || TVS SMDJ120A 110 Vin models: 2x KXJ 150 µF || TVS SMDJ170A
	- Conducted RF Disturbances		EN 61000-4-6, 10 Vrms, perf. criteria A
	- PF Magnetic Field	Continuous:	EN 61000-4-8, 100 A/m, perf. criteria A
		1 s:	EN 61000-4-8, 1000 A/m, perf. criteria A
EMC / Environmental	- Certification Documents		www.tracopower.com/ten60wir-emc-cert

General Specifications

Relative Humidity	95% max. (non condensing)

All specifications valid at nominal voltage, resistive full load and +25°C after warm-up time, unless otherwise stated.

Downloaded from Arrow.com.

Temperature Ranges	- Operating Temperature - Case Temperature - Storage Temperature	–40°C to +85°C +105°C max. –55°C to +125°C
Power Derating	- High Temperature See application note:	2.86 %/K above 70°C www.tracopower.com/ten60wir-cc
Over Temperature Protection Switch Off	- Protection Mode	115°C typ.
Cooling System		Natural convection (20 LFM)
Remote Control	- Voltage Controlled Remote (passive = on) - Off Idle Input Current - Remote Pin Input Current	On: 3.0 to 12 VDC or open circuit Off: 0 to 1.2 VDC or short circuit Refers to 'Remote' and '-Vin' Pin 3 mA typ. -0.5 to 0.5 mA
Altitude During Operation		5'000 m max.
Switching Frequency		200 - 275 kHz (PWM) 250 kHz typ. (PWM)
Insulation System		Functional Insulation
Isolation Test Voltage	- Input to Output, 60 s - Input to Case, 60 s	3'000 VDC 2'250 VDC
Isolation Resistance	- Input to Output, 500 VDC	1'000 MΩ min.
Isolation Capacitance	- Input to Output, 100 kHz, 1 V	1'500 pF max.
Reliability	- Calculated MTBF	724'500 h (MIL-HDBK-217F, ground benign)
Washing Process		According to Cleaning Guideline www.tracopower.com/info/cleaning.pdf
Environment	- Vibration - Mechanical Shock - Thermal Shock - Flammability	MIL-STD-810F EN 61373 MIL-STD-810F EN 61373 MIL-STD-810F EN 45545-2 www.tracopower.com/info/en45545-declaration.pdf
Housing Material		Copper
Base Material		Non-conductive FR4 (UL 94 V-0 rated)
Potting Material		Silicone (UL 94 V-0 rated)
Pin Material		Copper
Pin Foundation Plating		Nickel (2 - 3 µm)
Pin Surface Plating		Tin (3 - 5 µm), matte
Housing Type		Metal Case
Mounting Type		PCB Mount
Connection Type		THD (Through-Hole Device)
Footprint Type		2" x 1"
Soldering Profile		Lead-Free Wave Soldering 260°C / 6 s max.
Weight		66.9 g
Thermal Impedance	- Case to Ambient	5.9 K/W typ. (standard version) 8.3 K/W typ. (with heatsink TEN-HS8) 7.0 K/W typ. (with heatsink TEN-HS9) 5.7 K/W typ. (with heatsink TEN-HS10) 10.8 K/W typ. (without heatsink)

All specifications valid at nominal voltage, resistive full load and +25°C after warm-up time, unless otherwise stated.

Downloaded from Arrow.com.

Environmental Compliance	- REACH Declaration	www.tracopower.com/info/reach-declaration.pdf
		REACH SVHC list compliant REACH Annex XVII compliant
	- RoHS Declaration	www.tracopower.com/info/rohs-declaration.pdf
		Exemptions: 7(a), 7(c)-I (RoHS exemptions refer to the component concentration only, not to the overall concentration in the product (O5A rule).)
	- SCIP Reference Number	a10288ba-6d67-42a5-a41f-60dc3b8d3e82

Additional Information

Supporting Documents	www.tracopower.com/overview/ten60wir
Frequently Asked Questions	www.tracopower.com/glossary-faq
Glossary	www.tracopower.com/info/glossary.pdf

Outline Dimensions

Standard model

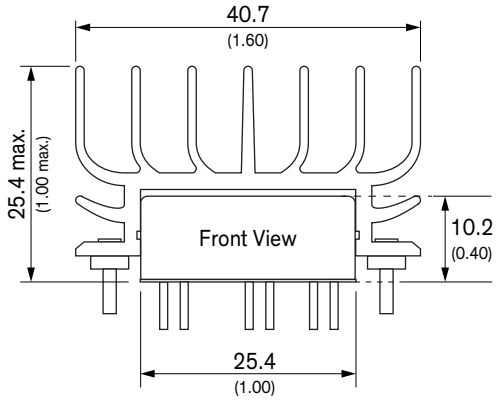

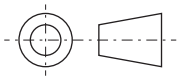

Dimensions in mm (inch)
Tolerances: x.x ±0.5 (±0.02)
x.xx ±0.25 (±0.01)
Pin diameter ±0.1 (±0.004)

Pinout		
Pin	**Single**	**Dual**
1	+Vin (Vcc)	+Vin (Vcc)
2	−Vin (GND)	−Vin (GND)
3	Remote On/Off	Remote On/Off
4	+Vout	+Vout
5	−Vout	Common
6	Trim	−Vout
7	Heatsink	Heatsink
8	Heatsink	Heatsink

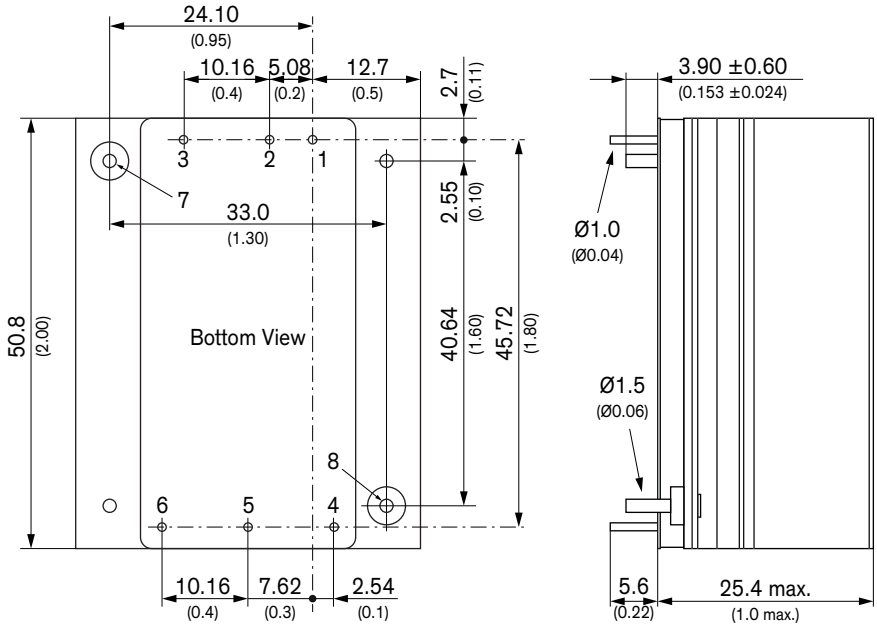

All specifications valid at nominal voltage, resistive full load and +25°C after warm-up time, unless otherwise stated.

Downloaded from Arrow.com.

Optional model without heatsink

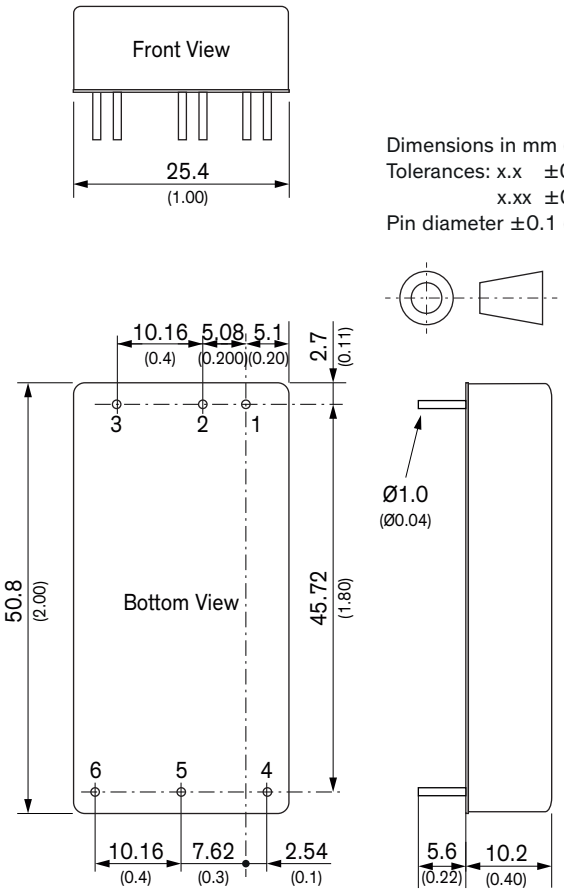

Pinout		
Pin	**Single**	**Dual**
1	+Vin (Vcc)	+Vin (Vcc)
2	–Vin (GND)	–Vin (GND)
3	Remote On/Off	Remote On/Off
4	+Vout	+Vout
5	–Vout	Common
6	Trim	–Vout

© Copyright 2025 Traco Electronic AG

Downloaded from Arrow.com.