FAIRCHILD SEMICONDUCTOR®

July 2025

FDMS7660AS

N-Channel PowerTrench® SyncFET™

30 V, 42 A, 2.4 mΩ

Features

- Max $r_{DS(on)}$ = 2.4 mΩ at V_{GS} = 10 V, I_D = 25 A
- Max $r_{DS(on)}$ = 2.6 mΩ at V_{GS} = 7 V, I_D = 23 A
- Advanced Package and Silicon combination for low $r_{DS(on)}$ and high efficiency
- SyncFET Schottky Body Diode
- MSL1 robust package design
- 100% UIL tested
- RoHS Compliant

General Description

The FDMS7660AS has been designed to minimize losses in power conversion application. Advancements in both silicon and package technologies have been combined to offer the lowest $r_{DS(on)}$ while maintaining excellent switching performance. This device has the added benefit of an efficient monolithic Schottky body diode.

Applications

- Synchronous Rectifier for DC/DC Converters
- Notebook Vcore / GPU low side switch
- Networking Point of Load low side switch
- Telecom secondary side rectification

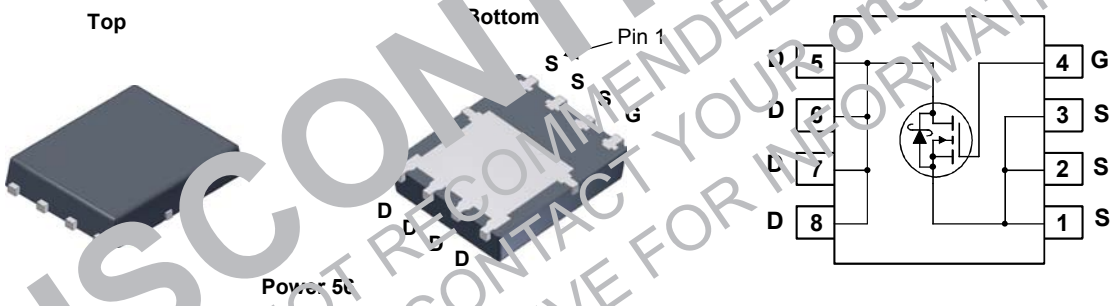

MOSFET Maximum Ratings T_C = 25 °C unless otherwise noted

Symbol	Parameter			Ratings	Units
V_{DS}	Drain to Source Voltage			30	V
V_{GS}	Gate to Source Voltage		(Note 4)	±20	V
I_D	Drain Current -Continuous (Package limited)	T_C = 25 °C		42	A
	-Continuous (Silicon limited)	T_C = 25 °C		152	
	-Continuous	T_A = 25 °C	(Note 1a)	26	
	-Pulsed			150	
dv/dt	MOSFET dv/dt			1.7	V/ns
E_{AS}	Single Pulse Avalanche Energy		(Note 3)	128	mJ
P_D	Power Dissipation	T_C = 25 °C		83	W
	Power Dissipation	T_A = 25 °C	(Note 1a)	2.5	
T_J, T_{STG}	Operating and Storage Junction Temperature Range			-55 to +150	°C

Thermal Characteristics

$R_{\theta JC}$	Thermal Resistance, Junction to Case	1.5	°C/W
$R_{\theta JA}$	Thermal Resistance, Junction to Ambient (Note 1a)	50	

Package Marking and Ordering Information

Device Marking	Device	Package	Reel Size	Tape Width	Quantity
FDMS7660AS	FDMS7660AS	Power 56	13 ”	12 mm	3000 units

DISCONTINUED
THIS DEVICE IS NOT RECOMMENDED FOR NEW DESIGN
PLEASE CONTACT YOUR onsemi REPRESENTATIVE FOR INFORMATION

Downloaded from Arrow.com.

Electrical Characteristics T_A = 25 °C unless otherwise noted

Symbol	Parameter	Test Conditions	Min	Typ	Max	Units
Off Characteristics						
BV_{DSS}	Drain to Source Breakdown Voltage	I_D = 1 mA, V_{GS} = 0 V	30			V
$\frac{\Delta BV_{DSS}}{\Delta T_J}$	Breakdown Voltage Temperature Coefficient	I_D = 10 mA, referenced to 25 °C		14		mV/°C
I_{DSS}	Zero Gate Voltage Drain Current	V_{DS} = 24 V, V_{GS} = 0 V			500	µA
I_{GSS}	Gate to Source Leakage Current, Forward	V_{GS} = 20 V, V_{DS} = 0 V			100	nA
On Characteristics (Note 2)						
$V_{GS(th)}$	Gate to Source Threshold Voltage	V_{GS} = V_{DS}, I_D = 1 mA	1.2	1.9	3.0	V
$\frac{\Delta V_{GS(th)}}{\Delta T_J}$	Gate to Source Threshold Voltage Temperature Coefficient	I_D = 10 mA, referenced to 25 °C		[illegible]		mV/°C
$r_{DS(on)}$	Static Drain to Source On Resistance	V_{GS} = 10 V, I_D = 25 A		1.9	2.4	mΩ
		V_{GS} = 7 V, I_D = 23 A		[illegible]	2.6	
		V_{GS} = 4.5 V, I_D = 21 A		2.5	3.0	
		V_{GS} = 10 V, I_D = 25 A, T_J = 125 °C		[illegible]	3.1	
g_{FS}	Forward Transconductance	V_{DS} = 5 V, I_D = 25 A		455		S
Dynamic Characteristics						
C_{iss}	Input Capacitance	V_{DS} = 15 V, V_{GS} = 0 V, f = 1 MHz		4600	6120	pF
C_{oss}	Output Capacitance			1560	2065	pF
C_{rss}	Reverse Transfer Capacitance			125	190	pF
R_g	Gate Resistance			0.8	1.7	Ω
Switching Characteristics						
$t_{d(on)}$	Turn-On Delay Time	V_{DD} = 15 V, I_D = 25 A, V_{GS} = 10 V, R_{GEN} = 6 Ω		19	34	ns
t_r	Rise Time			8	15	ns
$t_{d(off)}$	Turn-Off Delay Time			40	65	ns
t_f	Fall Time			5	10	ns
Q_g	Total Gate Charge	V_{GS} = 0 V to 10 V; V_{DD} = 15 V, I_D = 25 A		64	90	nC
Q_g	Total Gate Charge	V_{GS} = 0 V to 4.5 V; V_{DD} = 15 V, I_D = 25 A		29	42	nC
Q_{gs}	Gate to Source Gate Charge			14.4		nC
Q_{gd}	Gate to Drain "Miller" Charge			5.9		nC
Drain-Source Diode Characteristics						
V_{SD}	Source to Drain Diode Forward Voltage	V_{GS} = 0 V, I_S = 2 A (Note 2)		0.41	0.7	V
		V_{GS} = 0 V, I_S = 25 A (Note 2)		0.76	1.2	
t_{rr}	Reverse Recovery Time	I_F = 25 A, di/dt = 300 A/µs		39	62	ns
Q_{rr}	Reverse Recovery Charge			55	88	nC

Notes:

1. $R_{\theta JA}$ is determined with the device mounted on a 1in^2 pad 2 oz copper pad on a 1.5 x 1.5 in. board of FR-4 material. $R_{\theta JC}$ is guaranteed by design while $R_{\theta CA}$ is determined by the user's board design.

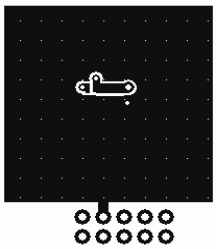

a. 50 °C/W when mounted on a 1 in^2 pad of 2 oz copper.

b. 125 °C/W when mounted on a minimum pad of 2 oz copper.

2. Pulse Test: Pulse Width < 300 µs, Duty cycle < 2.0%.

3. E_{AS} of 128 mJ is based on starting T_J = 25 °C, L = 1 mH, I_{AS} = 16 A, V_{DD} = 27 V, V_{GS} = 10 V. 100% test at L = 0.3 mH, I_{AS} = 25 A.

4. As an N-ch device, the negative Vgs rating is for low duty cycle pulse occurrence only. No continuous rating is implied.

DISCONTINUED
THIS DEVICE IS NOT RECOMMENDED FOR NEW DESIGN
PLEASE CONTACT YOUR onsemi
REPRESENTATIVE FOR INFORMATION

Downloaded from Arrow.com.

Typical Characteristics T_J = 25 °C unless otherwise noted

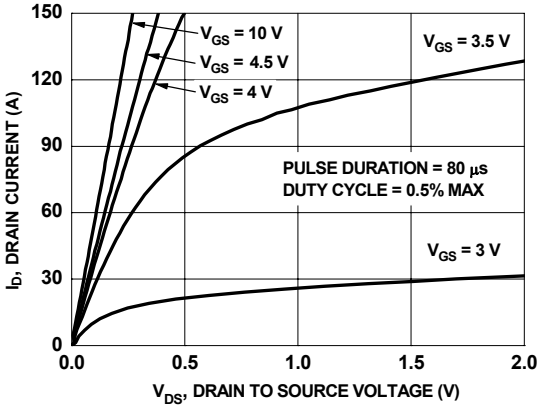

Figure 1. On-Region Characteristics

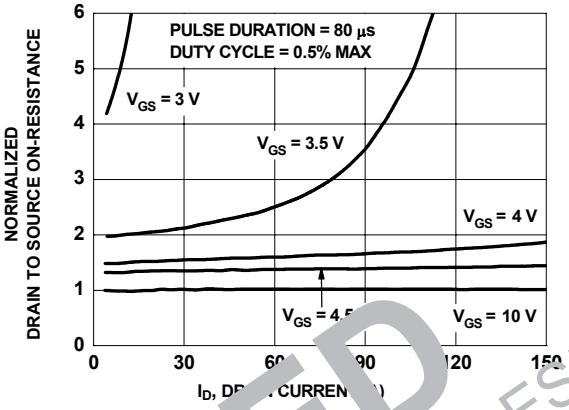

Figure 2. Normalized On-Resistance vs Drain Current and Gate Voltage

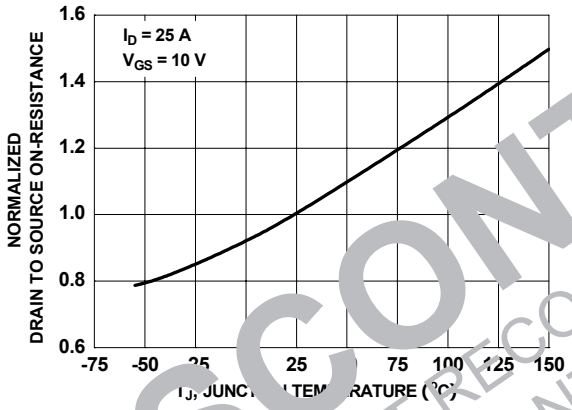

Figure 3. Normalized On-Resistance vs Junction Temperature

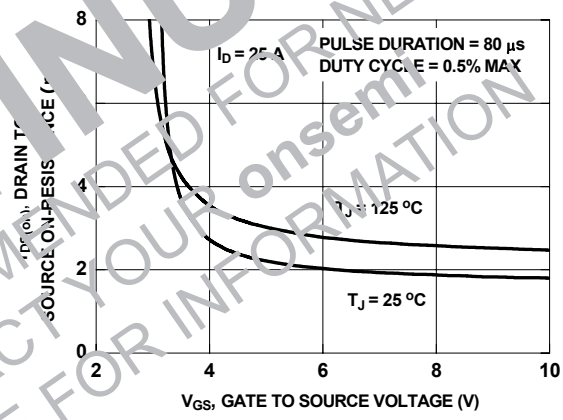

Figure 4. On-Resistance vs Gate to Source Voltage

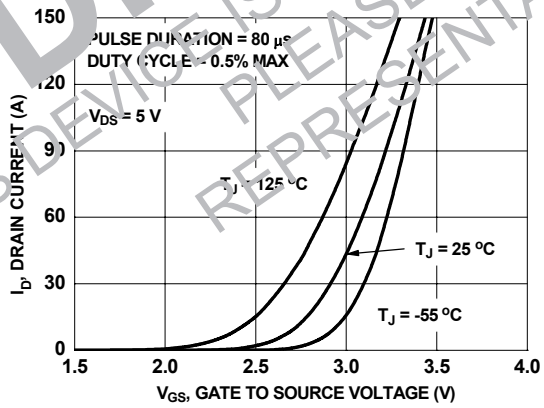

Figure 5. Transfer Characteristics

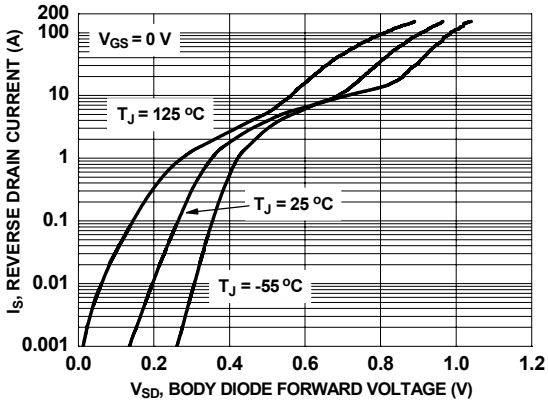

Figure 6. Source to Drain Diode Forward Voltage vs Source Current

DISCONTINUED
THIS DEVICE IS NOT RECOMMENDED FOR NEW DESIGN
PLEASE CONTACT YOUR onsemi
REPRESENTATIVE FOR INFORMATION

Downloaded from Arrow.com.

Typical Characteristics T_J = 25 °C unless otherwise noted

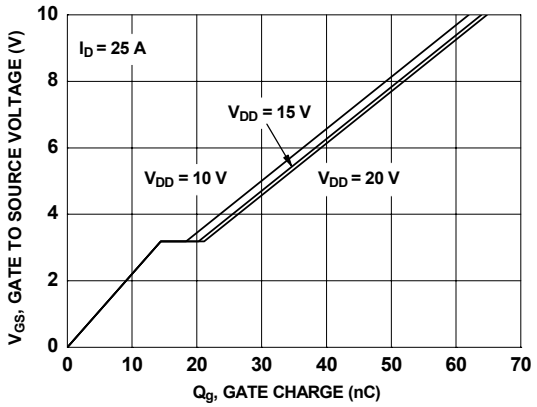

Figure 7. Gate Charge Characteristics

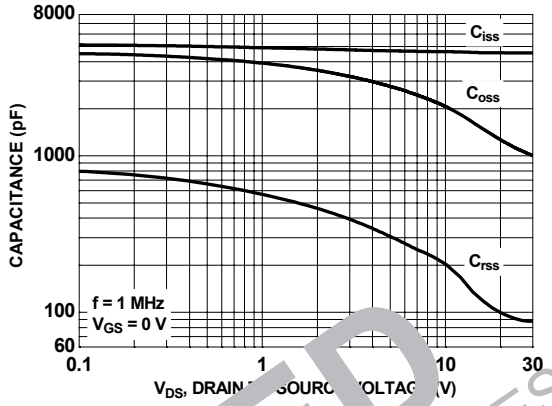

Figure 8. Capacitance vs Drain to Source Voltage

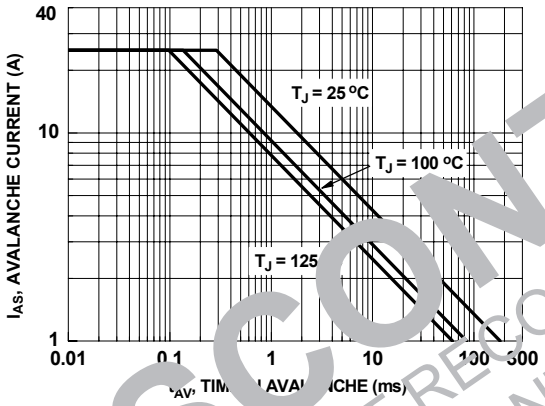

Figure 9. Unclamped Inductive Switching Capability

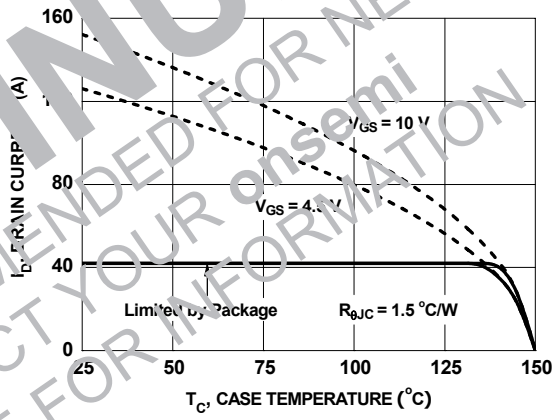

Figure 10. Maximum Continuous Drain Current vs Case Temperature

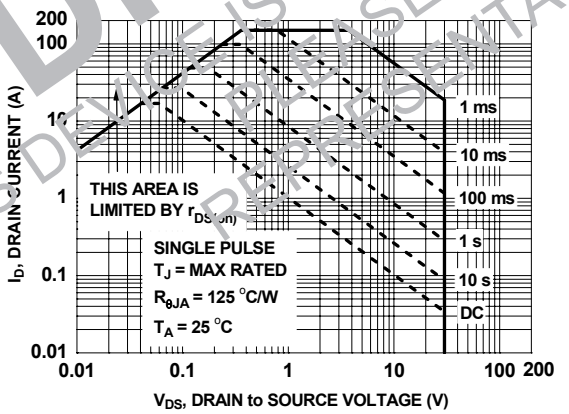

Figure 11. Forward Bias Safe Operating Area

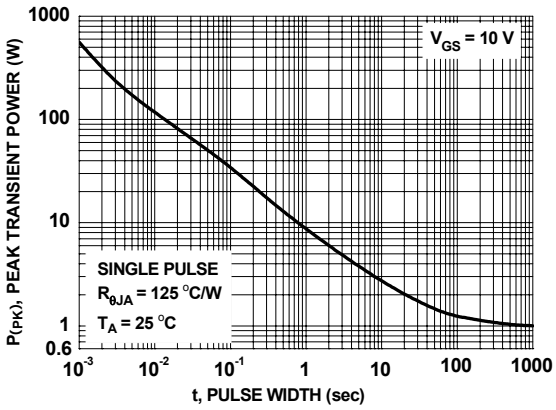

Figure 12. Single Pulse Maximum Power Dissipation

DISCONTINUED
THIS DEVICE IS NOT RECOMMENDED FOR NEW DESIGN
PLEASE CONTACT YOUR onsemi
REPRESENTATIVE FOR INFORMATION

Downloaded from Arrow.com.

Typical Characteristics T_J = 25 °C unless otherwise noted

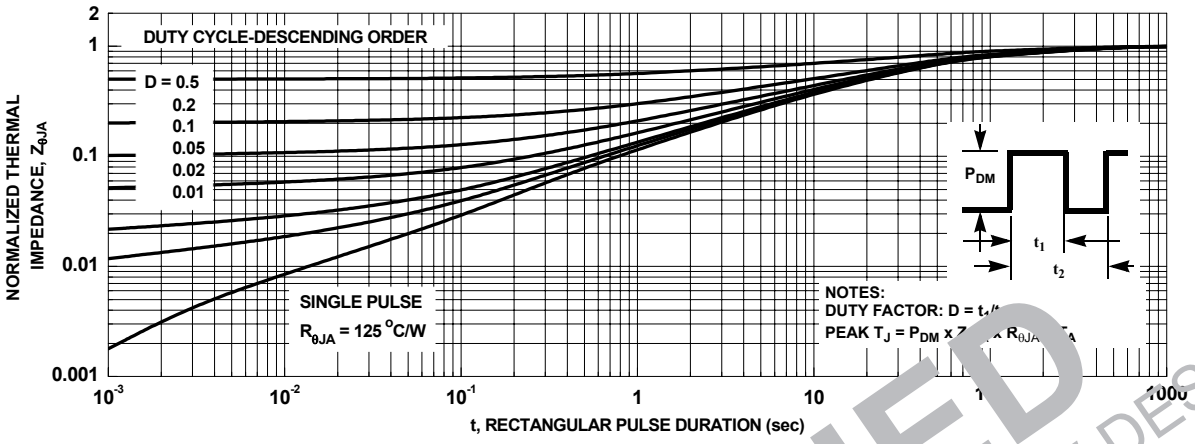

Figure 13. Junction-to-Ambient Transient Thermal Response Curve

DISCONTINUED
THIS DEVICE IS NOT RECOMMENDED FOR NEW DESIGN
PLEASE CONTACT YOUR onsemi
REPRESENTATIVE FOR INFORMATION

Downloaded from Arrow.com.

Typical Characteristics (continued)

SyncFET Schottky body diode Characteristics

Fairchild's SyncFET process embeds a Schottky diode in parallel with PowerTrench MoSFET. This diode exhibits similar characteristics to a discrete external Schottky diode in parallel with a MOSFET. Figure 14 shows the reverses recovery characteristic of the FDMS7660AS.

Schottky barrier diodes exhibit significant leakage at high temperature and high reverse voltage. This will increase the power in the device.

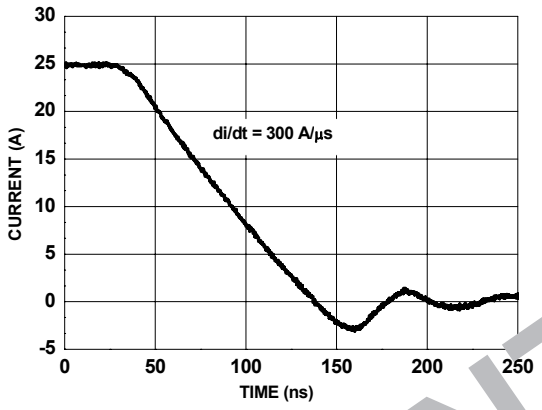

Figure 14. FDMS7660AS Sy[illegible] bo[illegible] diode reverse recovery ch[illegible]acteri[illegible]c

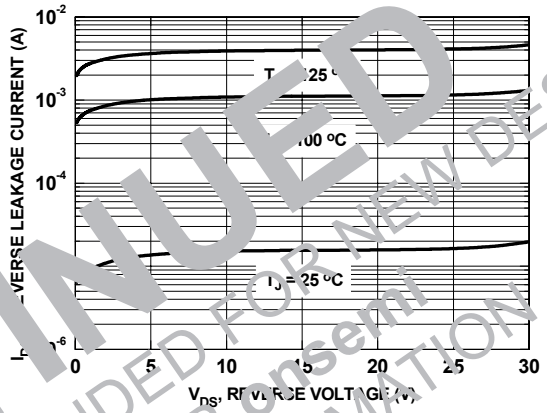

Figure 15. SyncFET body diode reverses leakage versus drain-source voltage

DISCONTINUED
THIS DEVICE IS NOT RECOMMENDED FOR NEW DESIGN
PLEASE CONTACT YOUR onsemi
REPRESENTATIVE FOR INFORMATION

Downloaded from Arrow.com.

PQFN8 5X6, 1.27P
CASE 483AE
ISSUE A

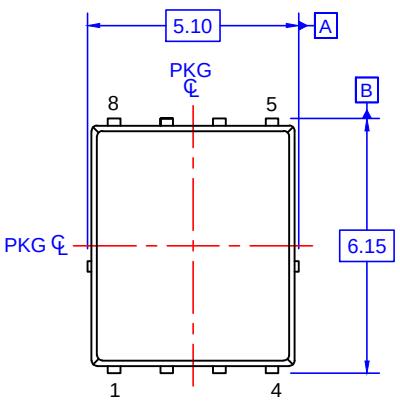

TOP VIEW

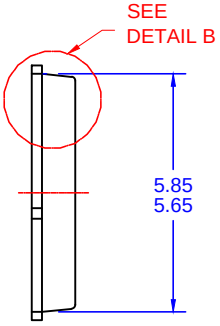

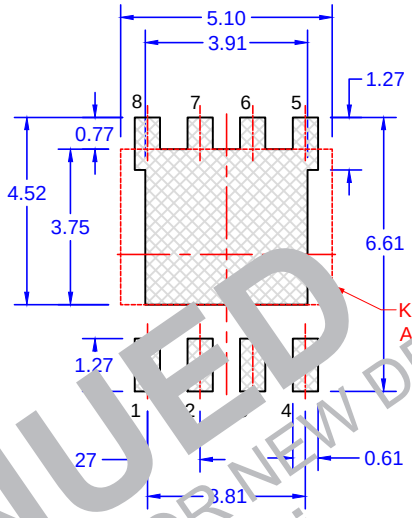

LAND PATTERN
RECOMMENDATION

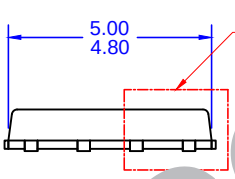

SIDE VIEW

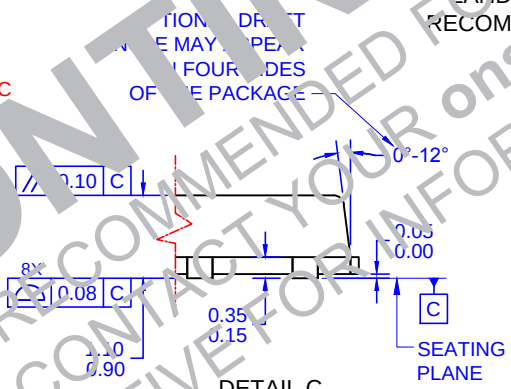

DETAIL C
SCALE: 2:1

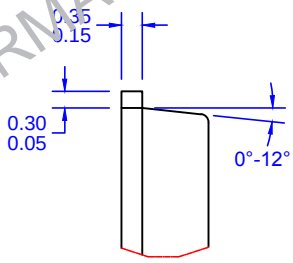

DETAIL B
SCALE: 2:1

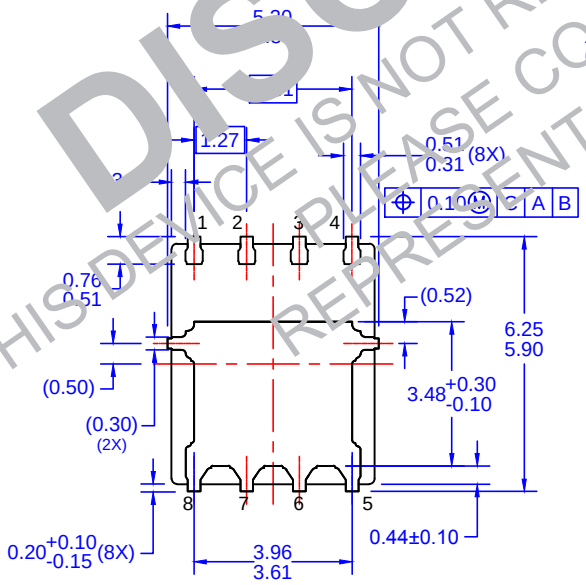

BOTTOM VIEW

NOTES: UNLESS OTHERWISE SPECIFIED

A. PACKAGE STANDARD REFERENCE: JEDEC MO-240, ISSUE A, VAR. AA,.
B. DIMENSIONS DO NOT INCLUDE BURRS OR MOLD FLASH. MOLD FLASH OR BURRS DOES NOT EXCEED 0.10MM.
C. ALL DIMENSIONS ARE IN MILLIMETERS.
D. DIMENSIONING AND TOLERANCING PER ASME Y14.5M-2009.
E. IT IS RECOMMENDED TO HAVE NO TRACES OR VIAS WITHIN THE KEEP OUT AREA.

ON Semiconductor

DISCONTINUED
THIS DEVICE IS NOT RECOMMENDED FOR NEW DESIGN
PLEASE CONTACT YOUR onsemi
REPRESENTATIVE FOR INFORMATION

Downloaded from Arrow.com.

DISCONTINUED
THIS DEVICE IS NOT RECOMMENDED FOR NEW DESIGN
PLEASE CONTACT YOUR onsemi
REPRESENTATIVE FOR INFORMATION

ON Semiconductor and ON are trademarks of Semiconductor Components Industries, LLC dba ON Semiconductor or its subsidiaries in the United States and/or other countries. ON Semiconductor owns the rights to a number of patents, trademarks, copyrights, trade secrets, and other intellectual property. A listing of ON Semiconductor's product/patent coverage may be accessed at www.onsemi.com/site/pdf/Patent−Marking.pdf. ON Semiconductor reserves the right to make changes without further notice to any products herein. ON Semiconductor makes no warranty, representation or guarantee regarding the suitability of its products for any particular purpose, nor does ON Semiconductor assume any liability arising out of the application or use of any product or circuit, and specifically disclaims any and all liability, including without limitation special, consequential or incidental damages. Buyer is responsible for its products and applications using ON Semiconductor products, including compliance with all laws, regulations and safety requirements or standards, regardless of any support or applications information provided by ON Semiconductor. "Typical" parameters which may be provided in ON Semiconductor data sheets and/or specifications can and do vary in different applications and actual performance may vary over time. All operating parameters, including "Typicals" must be validated for each customer application by customer's technical experts. ON Semiconductor does not convey any license under its patent rights nor the rights of others. ON Semiconductor products are not designed, intended, or authorized for use as a critical component in life support systems or any FDA Class 3 medical devices or medical devices with a same or similar classification in a foreign jurisdiction or any devices intended for implantation in the human body. Should Buyer purchase or use ON Semiconductor products for any such unintended or unauthorized application, Buyer shall indemnify and hold ON Semiconductor and its officers, employees, subsidiaries, affiliates, and distributors harmless against all claims, costs, damages, and expenses, and reasonable attorney fees arising out of, directly or indirectly, any claim of personal injury or death associated with such unintended or unauthorized use, even if such claim alleges that ON Semiconductor was negligent regarding the design or manufacture of the part. ON Semiconductor is an Equal Opportunity/Affirmative Action Employer. This literature is subject to all applicable copyright laws and is not for resale in any manner.

PUBLICATION ORDERING INFORMATION

LITERATURE FULFILLMENT:
Literature Distribution Center for ON Semiconductor
19521 E. 32nd Pkwy, Aurora, Colorado 80011 USA
Phone: 303−675−2175 or 800−344−3860 Toll Free USA/Canada
Fax: 303−675−2176 or 800−344−3867 Toll Free USA/Canada
Email: orderlit@onsemi.com

N. American Technical Support: 800−282−9855 Toll Free USA/Canada
Europe, Middle East and Africa Technical Support:
Phone: 421 33 790 2910
Japan Customer Focus Center
Phone: 81−3−5817−1050

ON Semiconductor Website: **www.onsemi.com**

Order Literature: http://www.onsemi.com/orderlit

For additional information, please contact your local Sales Representative

Downloaded from Arrow.com.