Digital output Pressure Sensor

MMR920 Datasheet

DESCRIPTION

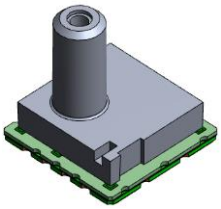

The MMR920 digitally outputs pressure value which was corrected. Customers need no correction because it corrects and outputs the differences of sensors and temperature characteristics. It does not require complicated sensor drive or control circuit, and devices with high performance can be made only with this module and an external microcontroller which will be the host.

FEATURES

- Small package:7.0(W) ×7.0(D) ×7.2(H)mm
- Operating pressure range
  C02 rank: -20~20cmH2O(-1.961~1.961kPa)
  C04 rank: -40~40cmH2O(-3.922~3.922kPa)
  C07 rank: -70~70cmH2O(-6.865~6.865kPa)
  C10 rank: -100~100cmH2O(-9.807~9.807kPa)
- Effective resolution: 0.002cmH2ORMS (0.196PaRMS) (at MODE4)
- Pressure measurement error
  C02 rank: ±2.0[%FS]
  C04,C07,C10 rank: ±1.0 [%FS]
- It corrects the differences of sensors and temperature characteristics when shipped from our factory.
- It digitally outputs pressure value corrected in the module. (SPI/I2C)
  I2C slave address (7 bits) is 0x67
- Noise reduction is possible by a built-in Low Pass Filter.
- This product complies with RoHS.
- This product contains halogen.

rank		Pressure Unit Conversion Table						
	cmH2O	mbar	bar	psi	inchH2O	i.w.c	Pa	kPa
C02	±20	±19.61	±0.01961	±0.2845	±7.9402	±7.9402	±1961	±1.961
C04	±40	±39.23	±0.03923	±0.5689	±15.8804	±15.8804	±3922	±3.922
C07	±70	±68.65	±0.06865	±0.9956	±27.7907	±27.7907	±6865	±6.865
C10	±100	±98.07	±0.09807	±1.4223	±39.7010	±39.7010	±9807	±9.807

©2024 Mitsumi Electric Co., Ltd. All rights reserved. The contents of this document are subject to change without notice. The details listed here are not a guarantee.

Downloaded from Arrow.com.

INDEX

DESCRIPTION 1
FEATURES 1
BLOCK DIAGRAM 4
PIN CONFIGURATION 5
TERMINAL EXPLANATIONS 6
ABSOLUTE MAXIMUM RATINGS 7
RECOMMENDED OPERATING CONDITIONS 7
ELECTRICAL CHARACTERISTICS 8
Analog characteristics 8
Digital I/O 8
C02 rank Pressure sensor characteristics 9
C04 rank Pressure sensor characteristics 10
C07 rank Pressure sensor characteristics 11
C10 rank Pressure sensor characteristics 12
Temperature sensor characteristics 13
Definition of characteristics 13
FUNCTION EXPLANATION 15
Function Outline 15
State transition table 16
Command code 17
Flow chart of pressure/temperature measurement 20
Product code obtain flow chart 21
Timing Chart 22
Low Pass Filter 23
SERIAL COMMUNICATION INTERFACE 24
Baud rate 24
SPI AC Characteristics 25
SPI format 26
I2C AC Characteristics 28
I2C format 29
TYPICAL APPLICATION CIRCUIT 31
TYPICAL PERFORMANCE CHARACTERISTICS 32
Analog characteristics 32
C02 rank Pressure sensor characteristics 36
C04 rank Pressure sensor characteristics 36
C07 rank Pressure sensor characteristics 38
C10 rank Pressure sensor characteristics 38
PACKAGE STRUCTURE 40
DIMENSIONS 41
MARKING CONTENTS 42
PRODUCT NAME 43
PRODUCT LINEUP 43
PRESSURE SENSOR LINEUP 44
NOTES 45
ATTENTION 46
ADDTTIONAL NOTES 46
PACKING SPECIFICATIONS (TRAY) 47
PACKING SPECIFICATIONS (TAPING, R HOUSING) 52

©2024 Mitsumi Electric Co., Ltd. All rights reserved. The contents of this document are subject to change without notice. The details listed here are not a guarantee.

Downloaded from Arrow.com.

CONDITION FOR PACKAGE MOUNTING 58
Design example of mount pad 58
Pb-Free recommended profile condition 59
Storage method 60

©2024 Mitsumi Electric Co., Ltd. All rights reserved. The contents of this document are subject to change without notice. The details listed here are not a guarantee.

Downloaded from Arrow.com.

BLOCK DIAGRAM

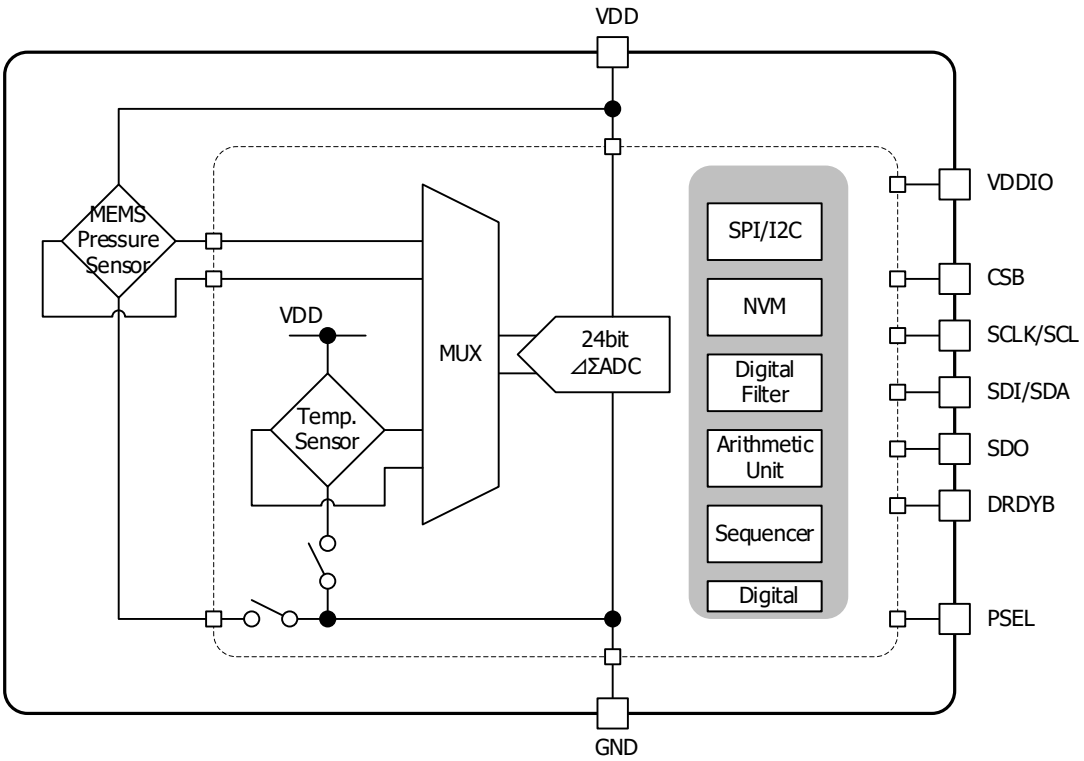

Fig. 1 Block diagram

©2024 Mitsumi Electric Co., Ltd. All rights reserved. The contents of this document are subject to change without notice. The details listed here are not a guarantee.

Downloaded from Arrow.com.

PIN CONFIGURATION

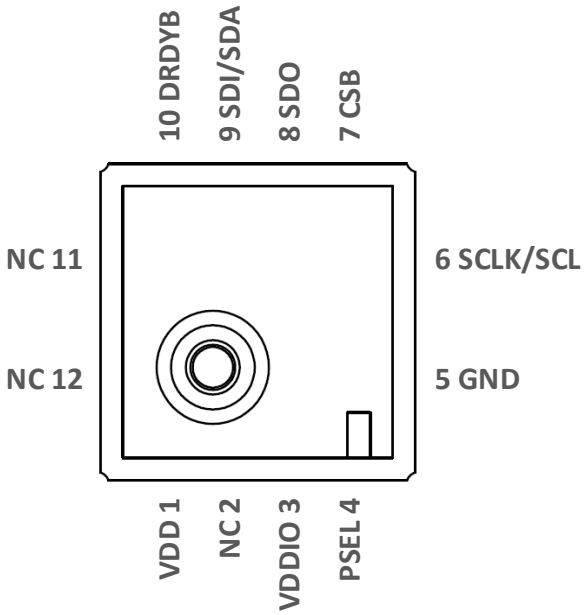

Fig. 2 Pin configuration (Top view)

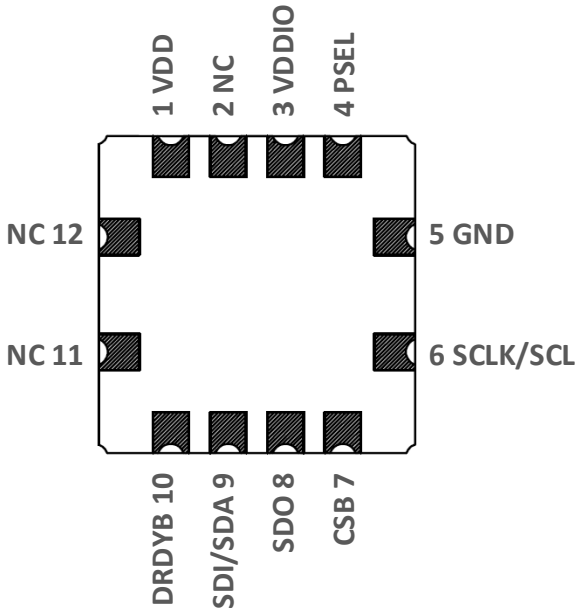

Fig. 3 Pin configuration (Bottom view)

©2024 Mitsumi Electric Co., Ltd. All rights reserved. The contents of this document are subject to change without notice. The details listed here are not a guarantee.

Downloaded from Arrow.com.

TERMINAL EXPLANATIONS

Table 1 Pin table

No.	Pin Name	Type	Function
1	VDD	I	Power-supply for analog circuit
2	NC	-	No connect.
3	VDDIO	I	Power-supply for digital I/O
4	PSEL	I	Protocol select terminal(High：SPI/Low:I2C) * PSEL is not pull-up / pull-down in the internal circuit. Please use it must be connected to VDDIO or GND.
5	GND	-	GND
6	SCLK SCL	I I/O	Serial clock for SPI communication (SCLK) Serial clock for I2C communication (SCL)
7	CSB	I	Chip select for SPI communication *Please set to open circuit when I2C is used
8	SDO	O	Serial Data Output for SPI communication (SDO=MISO) *Please set to open circuit when I2C is used
9	SDI SDA	I I/O	Serial Data Input for SPI communication (SDI=MOSI) Serial Data (Input and output) for I2C communication (SDA)
10	DRDYB	O	Output terminal which notifies the completion of pressure measurement and calculation correction (negative logic)
11	NC	-	No connect.
12	NC	-	No connect.

©2024 Mitsumi Electric Co., Ltd. All rights reserved. The contents of this document are subject to change without notice. The details listed here are not a guarantee.

Downloaded from Arrow.com.

ABSOLUTE MAXIMUM RATINGS

(unless otherwise specified, Ta=25°C)

Item	Symbol	Min.	Max.	Unit
Storage temperature range	T_{STG}	-40	85	°C
Analog supply voltage	VDD_{MAX}	-0.3	4.0	V
Digital I/O voltage	$VDDIO_{MAX}$	-0.3	4.0	V
Overpressure (note[1])	P_{MAX}	-200 (-19.6)	200 (19.6)	cmH2O (kPa)
Burst pressure (note[2])	P_{Burst}	-500 (-49)	500 (49)	cmH2O (kPa)
Pressure medium (note[3])	-	Non-Corrosive Gas (non-condensing)		-

note[1]: Overpressure is the maximum pressure that can be repeatedly applied to a product. If the pressure returns to the Operating pressure range, the product meets specifications. (Tested to 1 million cycles)
note[2]: Burst pressure is the pressure that will cause damage and leakage to the product , if applied even once.
note[3]: Storage and operation in an environment of dry and non-corrosive gases.

RECOMMENDED OPERATING CONDITIONS

(unless otherwise specified, Ta=25°C)

Item		Symbol	Min.	Typ.	Max.	Unit
Operating temperature range		T_{OPR}	-40	-	85	°C
Analog supply voltage		VDD_{OPR}	3.0	3.3	3.6	V
Digital I/O voltage		$VDDIO_{OPR}$	1.2	-	3.6	V
Operating pressure range	C02 rank	P_{OPR}	-20 (-1.961)	-	20 (1.961)	cmH2O (kPa)
	C04 rank		-40 (-3.922)	-	40 (3.922)	
	C07 rank		-70 (-6.865)	-	70 (6.865)	
	C10 rank		-100 (-9.807)	-	100 (9.807)	
Full Scale	C02 rank	FS	-	20 (1.961)	-	cmH2O (kPa)
	C04 rank		-	40 (3.922)	-	
	C07 rank		-	70 (6.865)	-	
	C10 rank		-	100 (9.807)	-	

©2024 Mitsumi Electric Co., Ltd. All rights reserved. The contents of this document are subject to change without notice. The details listed here are not a guarantee.

Downloaded from Arrow.com.

ELECTRICAL CHARACTERISTICS

Analog characteristics

(unless otherwise specified, Ta=25°C, VDD=VDDIO=3.3V)

Item	Symbol	Condition	Min.	Typ.	Max.	Unit.
VDD Current consumption	I_{VDDact}	Pressure measure active	640	800	960	μA
	I_{VDDsd}	Shutdown	-	0.01	0.1	
VDDIO Current consumption	$I_{VDDIOact}$	Pressure measure active	1.4	2.5	3.0	μA
	$I_{VDDIOsd}$	Shutdown	-	0.1	1.0	
Conversion time (note[4])	t_{con1}	MODE1	0.385	0.395	0.405	msec
	t_{con2}	MODE2	0.770	0.790	0.810	
	t_{con3}	MODE3	1.54	1.58	1.62	
	t_{con4}	MODE4	3.08	3.16	3.24	

note[4]: The conversion time is longer when the temperature is measured once every 256 times and the characteristic correction is updated.

Digital I/O

(unless otherwise specified, Ta=25°C, VDD=3.0~3.6V, VDDIO=1.2~3.6V)

Item	Symbol	Conditions	Min.	Typ.	Max.	Unit
Input voltage High level	V_{IH}	-	0.8 × VDDIO	-	VDDIO +0.3	V
Input voltage Low level	V_{IL}	-	-0.3	-	0.2 × VDDIO	V
Output voltage High level	V_{OH1}	VDDIO ≧ 2.0V I_{OH}=-3mA	VDDIO -0.4	-	-	V
	V_{OH2}	VDDIO < 2.0V I_{OH}=-1mA	0.8 × VDDIO		-	V
Output voltage Low level	V_{OL1}	VDDIO ≧ 2.0V I_{OL}=3mA	-	-	0.4	V
	V_{OL2}	VDDIO < 2.0V I_{OL}=1mA	-	-	0.2 × VDDIO	V

©2024 Mitsumi Electric Co., Ltd. All rights reserved. The contents of this document are subject to change without notice. The details listed here are not a guarantee.

Downloaded from Arrow.com.

C02 rank Pressure sensor characteristics

(unless otherwise specified, Ta=25°C, VDD=3.3V, VDDIO=1.2~3.6V)

Item	Symbol	Condition	Min.	Typ.	Max.	Unit
Operating pressure range	P_{OPR}	-	-20	-	20	cmH2O
Full Scale	FS	-	-	20	-	cmH2O
Pressure resolution	P_{Res}	-	-	0.00001	-	cmH2O
Pressure effective resolution	P_{Eres1}	MODE1 (tcon1 = Typ 0.395ms)	-	0.019	0.076	cmH2O RMS
	P_{Eres2}	MODE2 (tcon2 = Typ 0.790ms)	-	0.009	0.036	
	P_{Eres3}	MODE3 (tcon3 = Typ 1.58ms)	-	0.004	0.016	
	P_{Eres4}	MODE4 (tcon4 = Typ 3.16ms)	-	0.002	0.008	
Pressure measurement error	P_{Err}	-20 ~ 20cmH2O Ta = 0°C～50°C	-2.0	-	2.0	%FS (note[5])
		-20 ~ 20cmH2O Ta = -20°C～85°C	-6.0	-	6.0	
Pressure span accuracy	P_{Sacc}	-20 ~ 20cmH2O Ta = 0°C～50°C	-1.30	-	1.30	%FS (note[5])
		-20 ~ 20cmH2O Ta = -20°C～85°C	-4.00	-	4.00	
Pressure span accuracy Long term drift	P_{Sltd}	-20 ~ 20cmH2O Ta = 0°C～50°C Test condition = 0～50°C 1000h	-	-	±0.7	%FS (note[5])
Pressure linearity	P_L	-20 ~ 20cmH2O Ta = 0°C～50°C	-0.44	-	0.44	%FS (note[5])
		-20 ~ 20cmH2O Ta = -20°C～85°C	-1.20	-	1.20	

note[5]: Ratio to Full Scale (20cmH2O).

©2024 Mitsumi Electric Co., Ltd. All rights reserved. The contents of this document are subject to change without notice. The details listed here are not a guarantee.

Downloaded from Arrow.com.

C04 rank Pressure sensor characteristics

(unless otherwise specified, Ta=25°C, VDD=3.3V, VDDIO=1.2~3.6V)

Item	Symbol	Condition	Min.	Typ.	Max.	Unit
Operating pressure range	P_{OPR}	-	-40	-	40	cmH2O
Full Scale	FS	-	-	40	-	cmH2O
Pressure resolution	P_{Res}	-	-	0.00001	-	cmH2O
Pressure effective resolution	P_{Eres1}	MODE1 (tcon1 = Typ 0.395ms)	-	0.019	0.076	cmH2O RMS
	P_{Eres2}	MODE2 (tcon2 = Typ 0.790ms)	-	0.009	0.036	
	P_{Eres3}	MODE3 (tcon3 = Typ 1.58ms)	-	0.004	0.016	
	P_{Eres4}	MODE4 (tcon4 = Typ 3.16ms)	-	0.002	0.008	
Pressure measurement error	P_{Err}	-40 ~ 40cmH2O Ta = 0°C～50°C	-1.0	-	1.0	%FS (note[6])
		-40 ~ 40cmH2O Ta = -20°C～85°C	-3.0		3.0	
Pressure span accuracy	P_{Sacc}	-40 ~ 40cmH2O Ta = 0°C～50°C	-0.65	-	0.65	%FS (note[6])
		-40 ~ 40cmH2O Ta = -20°C～85°C	-2.00		2.00	
Pressure span accuracy Long term drift	P_{Sltd}	-40 ~ 40cmH2O Ta = 0°C～50°C Test condition = 0～50°C 1000h	-	-	±0.35	%FS (note[6])
Pressure linearity	P_L	-40 ~ 40cmH2O Ta = 0°C～50°C	-0.22	-	0.22	%FS (note[6])
		-40 ~ 40cmH2O Ta = -20°C～85°C	-0.60		0.60	

note[6]: Ratio to Full Scale (40cmH2O).

©2024 Mitsumi Electric Co., Ltd. All rights reserved. The contents of this document are subject to change without notice. The details listed here are not a guarantee.

Downloaded from Arrow.com.

C07 rank Pressure sensor characteristics

(unless otherwise specified, Ta=25°C, VDD=3.3V, VDDIO=1.2~3.6V)

Item	Symbol	Condition	Min.	Typ.	Max.	Unit
Operating pressure range	P_{OPR}	-	-70	-	70	cmH2O
Full Scale	FS	-	-	70	-	cmH2O
Pressure resolution	P_{Res}	-	-	0.00002	-	cmH2O
Pressure effective resolution	P_{Eres1}	MODE1 (tcon1 = Typ 0.395ms)	-	0.019	0.076	cmH2O RMS
	P_{Eres2}	MODE2 (tcon2 = Typ 0.790ms)	-	0.009	0.036	
	P_{Eres3}	MODE3 (tcon3 = Typ 1.58ms)	-	0.004	0.016	
	P_{Eres4}	MODE4 (tcon4 = Typ 3.16ms)	-	0.002	0.008	
Pressure measurement error	P_{Err}	-70 ~ 70cmH2O Ta = 0°C～50°C	-1.0	-	1.0	%FS (note[7])
		-70 ~ 70cmH2O Ta = -20°C～85°C	-3.0	-	3.0	
Pressure span accuracy	P_{Sacc}	-70 ~ 70cmH2O Ta = 0°C～50°C	-0.65	-	0.65	%FS (note[7])
		-70 ~ 70cmH2O Ta = -20°C～85°C	-2.00	-	2.00	
Pressure span accuracy Long term drift	P_{Sltd}	-70 ~ 70cmH2O Ta = 0°C～50°C Test condition = 0～50°C 1000h	-	-	±0.35	%FS (note[7])
Pressure linearity	P_L	-70 ~ 70cmH2O Ta = 0°C～50°C	-0.40	-	0.40	%FS (note[7])
		-70 ~ 70cmH2O Ta = -20°C～85°C	-0.60	-	0.60	

note[7]: Ratio to Full Scale (70cmH2O).

©2024 Mitsumi Electric Co., Ltd. All rights reserved. The contents of this document are subject to change without notice. The details listed here are not a guarantee.

Downloaded from Arrow.com.

C10 rank Pressure sensor characteristics

(unless otherwise specified, Ta=25°C, VDD=3.3V, VDDIO=1.2~3.6V)

Item	Symbol	Condition	Min.	Typ.	Max.	Unit
Operating pressure range	P_{OPR}	-	-100	-	100	cmH2O
Full Scale	FS	-	-	100	-	cmH2O
Pressure resolution	P_{Res}	-	-	0.00002	-	cmH2O
Pressure effective resolution	P_{Eres1}	MODE1 (tcon1 = Typ 0.395ms)	-	0.019	0.076	cmH2O RMS
	P_{Eres2}	MODE2 (tcon2 = Typ 0.790ms)	-	0.009	0.036	
	P_{Eres3}	MODE3 (tcon3 = Typ 1.58ms)	-	0.004	0.016	
	P_{Eres4}	MODE4 (tcon4 = Typ 3.16ms)	-	0.002	0.008	
Pressure measurement error	P_{Err}	-100 ~ 100cmH2O Ta = 0°C～50°C	-1.0	-	1.0	%FS (note[8])
		-100 ~ 100cmH2O Ta = -20°C～85°C	-3.0	-	3.0	
Pressure span accuracy	P_{Sacc}	-100 ~ 100cmH2O Ta = 0°C～50°C	-0.65	-	0.65	%FS (note[8])
		-100 ~ 100cmH2O Ta = -20°C～85°C	-2.00	-	2.00	
Pressure span accuracy Long term drift	P_{Sltd}	-100 ~ 100cmH2O Ta = 0°C～50°C Test condition = 0～50°C 1000h	-	-	±0.35	%FS (note[8])
Pressure linearity	P_L	-100 ~ 100cmH2O Ta = 0°C～50°C	-0.40	-	0.40	%FS (note[8])
		-100 ~ 100cmH2O Ta = -20°C～85°C	-0.60	-	0.60	

note[8]: Ratio to Full Scale (100cmH2O).

©2024 Mitsumi Electric Co., Ltd. All rights reserved. The contents of this document are subject to change without notice. The details listed here are not a guarantee.

Downloaded from Arrow.com.

Temperature sensor characteristics

(unless otherwise specified, Ta=25°C, VDD=3.3V VDDIO=1.2~3.6V)

Item	Symbol	Conditions	Min.	Typ.	Max.	Unit
Temperature measurement error	T_{acc}	0°C ~ 50°C Initial temperature ADC value (Timing Chart Temperature n=1st)	-2.0	-	2.0	°C

Definition of characteristics

Pressure measurement value P_{Result}
It is the device output value obtained by Read Pressure Result Command.

Pressure resolution P_{Res}
This Value is equivalent to 1LSB of output digital value.

Pressure effective resolution P_{Eres}
Measure 16 points after the pressure output is stable, and it is the standard deviation of the 16 points.

Pressure measurement error P_{Err}
It is the deviation amount of the Pressure measurement value from the ideal line. (Refer to Fig. 4)
Fig. 5 shows source of error included in the pressure measurement error.

Pressure linearity P_L
It is the amount of deviation from the Ref. line connecting measurement value – FS cmH2O with FS cmH2O.
(Refer to Fig. 4)

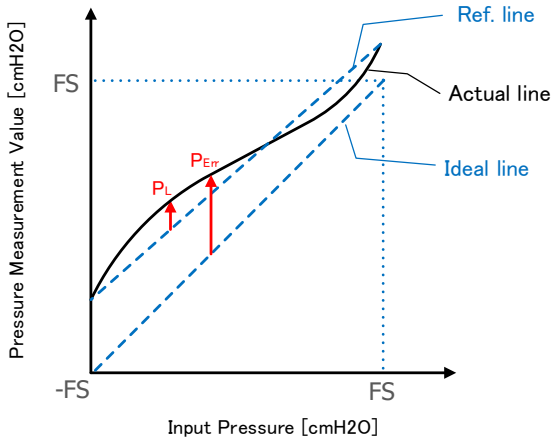

Fig. 4 Definition of Characteristics

©2024 Mitsumi Electric Co., Ltd. All rights reserved. The contents of this document are subject to change without notice. The details listed here are not a guarantee.

Downloaded from Arrow.com.

Pressure span accuracy P_{Sacc}

It is the accuracy removing the error caused by the offset from the pressure measurement error. (Refer to Fig. 5)

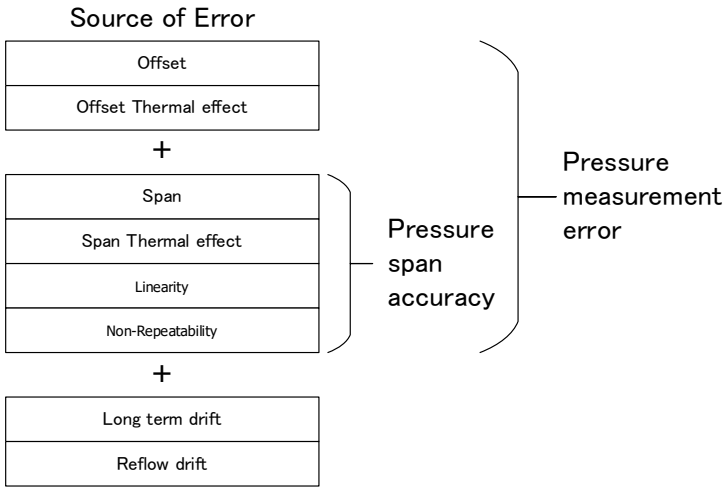

Fig. 5 Source of Error

Pressure span accuracy Long term drift P_{Sltd}

The amount of fluctuation in Pressure span accuracy over a long term.

©2024 Mitsumi Electric Co., Ltd. All rights reserved. The contents of this document are subject to change without notice. The details listed here are not a guarantee.

Downloaded from Arrow.com.

FUNCTION EXPLANATION

Function Outline

The MMR920 is consists of piezo resistive pressure sensor and an analog front end IC.

It converts analog output voltage from piezo resistive pressure sensor to digital value of 24 bits, and corrects and outputs variations of sensor characteristics due to variations of temperature and process.

Conversion time and Pressure effective resolution are selectable with the mode of different four. Conversion time and Pressure effective resolution are in the relationship of trade-off.

Noise reduction is possible by a built-in Low Pass Filter. Cutoff frequency of Low Pass Filter can be changed.

©2024 Mitsumi Electric Co., Ltd. All rights reserved. The contents of this document are subject to change without notice. The details listed here are not a guarantee.

Downloaded from Arrow.com.

State transition table

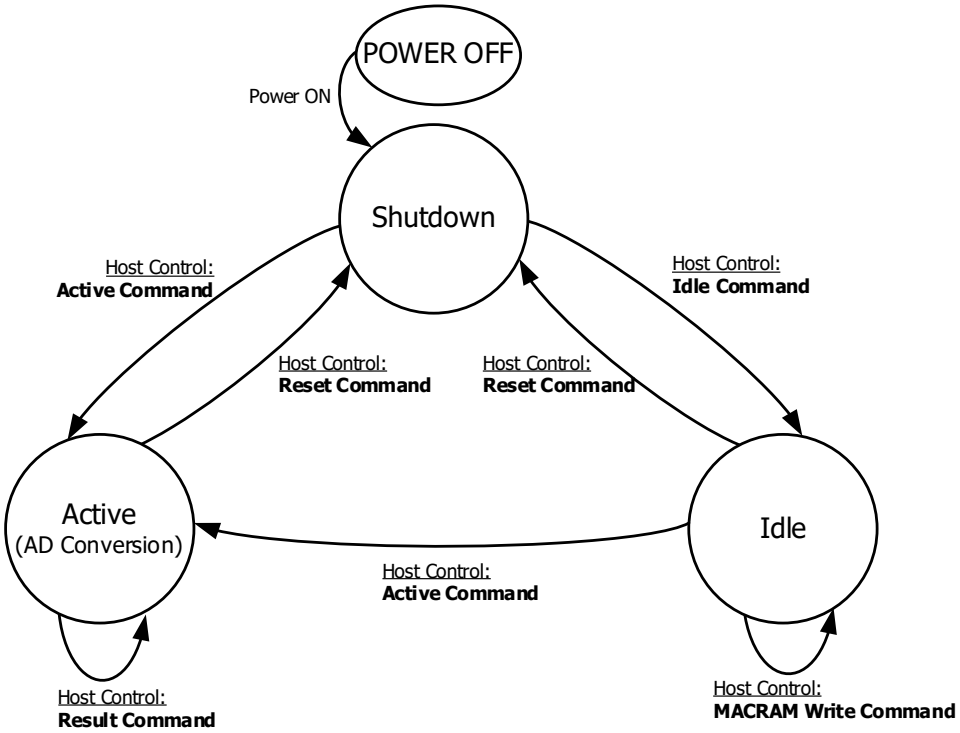

Fig. 6 State transition diagram

Table 2 State transition table

State / Command	Shutdown	Active	Idle
Reset	Power on Reset & Initial Boot =>Shutdown	Power on Reset & Initial Boot =>Shutdown	Power on Reset & Initial Boot =>Shutdown
Active	Reset & Boot Load =>Active state(AD conversion)	Ignore(note[9]) =>Keep state	=>Active state (AD conversion)
Result	Ignore(note[9]) =>Keep state	Output result =>Keep state	Do not issue(note[10]) =>Keep state
Idle	Reset & Boot Load =>Idle state	Do not issue(note[11]) =>Idle state	=>Keep state
MACRAM Write	Ignore(note[9]) =>Keep state	Do not issue(note[11]) =>Keep state	Change cutoff frequency =>Keep state
Status	Output code =>Keep state	Output code =>Keep state	Output code =>Keep state

note[9]: NACK is returned to the command.
note[10]: The correct result isn't output. Additionally, ACK is returned to the command.
note[11]: Although command is acceptable, it goes unintended behavior since sequence is running.

©2024 Mitsumi Electric Co., Ltd. All rights reserved. The contents of this document are subject to change without notice. The details listed here are not a guarantee.

Downloaded from Arrow.com.

Command code

Table 3 Command code list

Command Name		Command Code									Applicable format
		HEX.	BIN.								
			C7	C6	C5	C4	C3	C2	C1	C0	
Reset		0x72	0	1	1	1	0	0	1	0	SPI Write format I2C Write format
		Reset and Return to Shutdown state. It becomes busy for the maximum 10msec.									
Idle		0x94	1	0	0	1	0	1	0	0	SPI Write format I2C Write format
		Start up the internal circuit and put it in the idle state.									
Active	Measure at MODE 1	0xA0	1	0	1	0	0	0	0	0	SPI Write format I2C Write format
	Measure at MODE 2	0xA2	1	0	1	0	0	0	1	0	
	Measure at MODE 3	0xA4	1	0	1	0	0	1	0	0	
	Measure at MODE 4	0xA6	1	0	1	0	0	1	1	0	
		Start AD conversion.									

©2024 Mitsumi Electric Co., Ltd. All rights reserved. The contents of this document are subject to change without notice. The details listed here are not a guarantee.

Downloaded from Arrow.com.

Table 4 Command code list (continued)

Command Name		Command Code									Applicable format
		HEX.	BIN.								
			C7	C6	C5	C4	C3	C2	C1	C0	
	Normal	0xC0	1	1	0	0	0	0	0	0	SPI Write/Read format I2C Combined format
	With Low Pass Filter	0xC4	1	1	0	0	0	1	0	0	
Read Pressure Result		Read compensated pressure result. It outputs the result of pressure measurement at 24bits, MSB first. A negative number is expressed by 2's complement. About output range, in case of positive output : 000000 h ~ 7FFFFF h (in decimal number : 0 ~ 8388607), in case of negative output : FFFFFF h ~ 800000 h (in decimal number : -1 ~ -8388608) However, the result of measurement when being used beyond a recommended operating condition can't be guaranteed. C02 rank, C04 rank Pressure value = DEC. / 10^5 Output example:									

HEX.	DEC.	Pressure
800000 h	-8388608	-83.88608 cmH2O
C2F700 h	-4000000	-40.00000 cmH2O
E17B80 h	-2000000	-20.00000 cmH2O
FFFFFF h	-1	-0.00001 cmH2O
000000 h	0	0.00000 cmH2O
000001 h	1	0.00001 cmH2O
1E8480 h	2000000	20.00000 cmH2O
3D0900 h	4000000	40.00000 cmH2O
7FFFFF h	8388607	83.88607 cmH2O

C07 rank, C10 rank
Pressure value = DEC. x 2 / 10^5

Output example:

HEX.	DEC.	Pressure
800000 h	-8388608	-167.77216 cmH2O
B3B4C0 h	-5000000	-100.00000 cmH2O
CA9820 h	-3500000	-70.00000 cmH2O
FFFFFF h	-1	-0.00002 cmH2O
000000 h	0	0.00000 cmH2O
000001 h	1	0.00002 cmH2O
3567E0 h	3500000	70.00000 cmH2O
4C4B40 h	5000000	100.00000 cmH2O
7FFFFF h	8388607	167.77214 cmH2O

©2024 Mitsumi Electric Co., Ltd. All rights reserved. The contents of this document are subject to change without notice. The details listed here are not a guarantee.

Downloaded from Arrow.com.

Table 5 Command code list (continued)

<table>
<tr><th rowspan="3">Command Name</th><th colspan="9">Command Code</th><th rowspan="3">Applicable format</th></tr>
<tr><th rowspan="2">HEX.</th><th colspan="8">BIN.</th></tr>
<tr><th>C7</th><th>C6</th><th>C5</th><th>C4</th><th>C3</th><th>C2</th><th>C1</th><th>C0</th></tr>
<tr><td rowspan="2">Read Temperature Result</td><td>0xC2</td><td>1</td><td>1</td><td>0</td><td>0</td><td>0</td><td>0</td><td>1</td><td>0</td><td>SPI Write/Read format
I2C Combined format</td></tr>
<tr><td colspan="10">Read compensated temperature result.
It outputs the result of pressure measurement at 24bits, MSB first.
A negative number is expressed by 2’s complement.
About output range, in case of positive output : 000000 h ~ 7FFFFF h (in decimal number : 0 ~ 8388607), in case of negative output : FFFFFF h ~ 800000 h (in decimal number : -1 ~ -8388608)
However, the result of measurement when being used beyond a recommended operating condition can't be guaranteed.

Temperature value = DEC. / 2^7

Output example:
<table>
<tr><th>HEX.</th><th>DEC.</th><th>Temperature</th></tr>
<tr><td>000000 h</td><td>0</td><td>0.000 °C</td></tr>
<tr><td>000C80 h</td><td>3200</td><td>25.000 °C</td></tr>
<tr><td>001900 h</td><td>6400</td><td>50.000 °C</td></tr>
</table></td></tr>
<tr><td rowspan="2">Status</td><td>0x80</td><td>1</td><td>0</td><td>0</td><td>0</td><td>0</td><td>0</td><td>0</td><td>0</td><td>SPI Write/Read format
I2C Combined format</td></tr>
<tr><td colspan="10">Output 8bits data depending on the IC conditions
<table>
<tr><th>D7</th><th>D6</th><th>D5</th><th>D4</th><th>D3</th><th>D2</th><th>D1</th><th>D0</th><th>State</th></tr>
<tr><td>0</td><td>0</td><td>0</td><td>0</td><td>0</td><td>0</td><td>0</td><td>0</td><td>Shutdown</td></tr>
<tr><td>1</td><td>1</td><td>1</td><td>0</td><td>0</td><td>1</td><td>0</td><td>1</td><td>Idle</td></tr>
<tr><td>1</td><td>1</td><td>1</td><td>0</td><td>1</td><td>1</td><td>0</td><td>1</td><td>Active</td></tr>
</table></td></tr>
<tr><td rowspan="2">MACRAM Write</td><td>0xE4</td><td>1</td><td>1</td><td>1</td><td>0</td><td>0</td><td>1</td><td>0</td><td>0</td><td>SPI MACRAM Write format
I2C MACRAM Write format
(special format)</td></tr>
<tr><td colspan="10">It is used for writing filter coefficient. For the filter coefficient, refer to LowPassFilter.</td></tr>
<tr><td rowspan="2">Register Write</td><td>0xE0</td><td>1</td><td>1</td><td>1</td><td>0</td><td>0</td><td>0</td><td>0</td><td>0</td><td>SPI Register Write format
I2C Register Write format</td></tr>
<tr><td colspan="10">Write data to the register.</td></tr>
<tr><td rowspan="2">NVM Read</td><td>0xD6</td><td>1</td><td>1</td><td>0</td><td>1</td><td>0</td><td>1</td><td>1</td><td>0</td><td>SPI NVM Read format
I2C NVM Read format</td></tr>
<tr><td colspan="10">Read data from NVM.</td></tr>
</table>

©2024 Mitsumi Electric Co., Ltd. All rights reserved. The contents of this document are subject to change without notice. The details listed here are not a guarantee.

Downloaded from Arrow.com.

Flow chart of pressure/temperature measurement

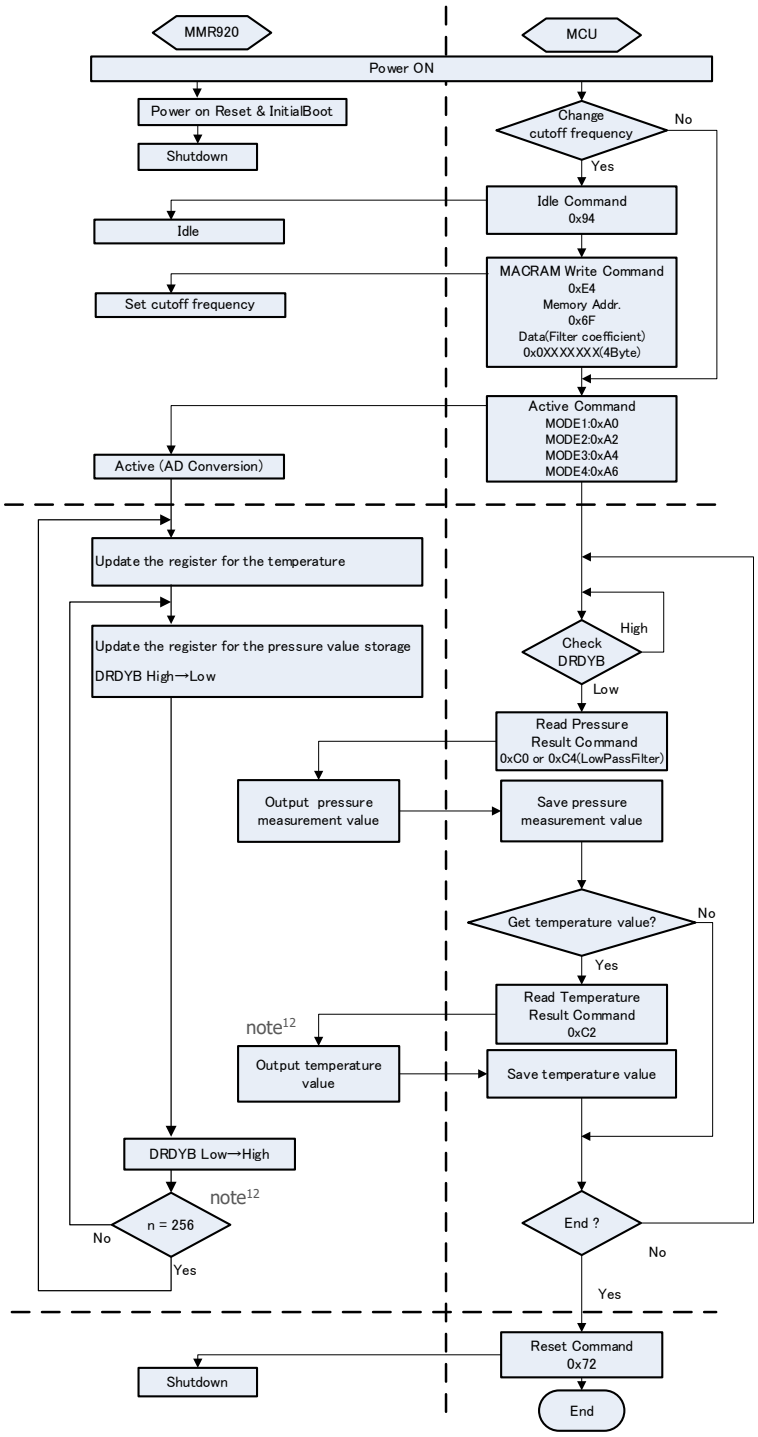

Fig. 7 Flow chart of pressure/temperature measurement

note[12]: Temperature is measured once every 256 times and the pressure characteristic correction is updated. Conversion time will be longer at this timing.

©2024 Mitsumi Electric Co., Ltd. All rights reserved. The contents of this document are subject to change without notice. The details listed here are not a guarantee.

Downloaded from Arrow.com.

Product code obtain flow chart

Product code has been recorded in internal memory (NVM(Non-volatile memory)) of the MMR920. Product code can be obtained by the process of Fig. 8.

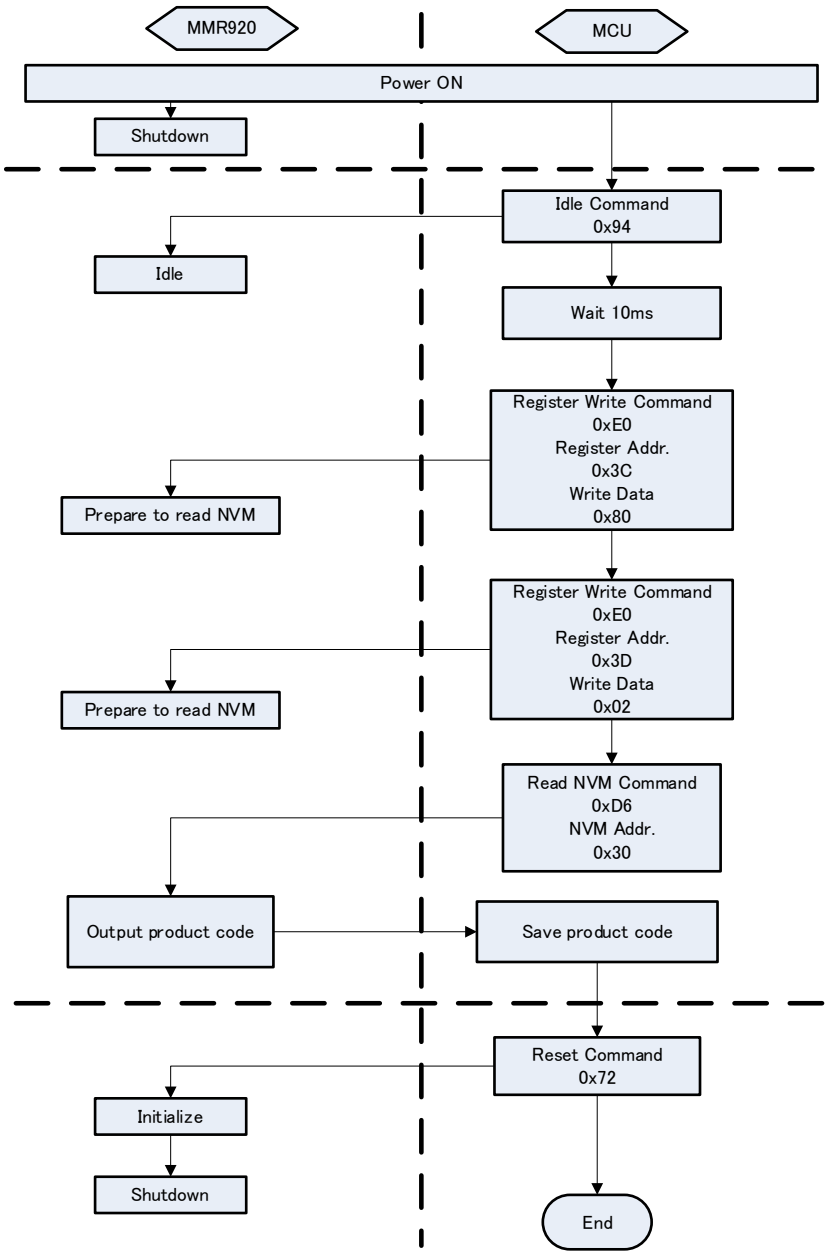

Fig. 8 Flow chart of product code gets

Table 6 Description of the product code

Rank	Product code
C02	0xC2
C04	0xC4
C07	0xC7
C10	0xCA

©2024 Mitsumi Electric Co., Ltd. All rights reserved. The contents of this document are subject to change without notice. The details listed here are not a guarantee.

Downloaded from Arrow.com.

Timing Chart

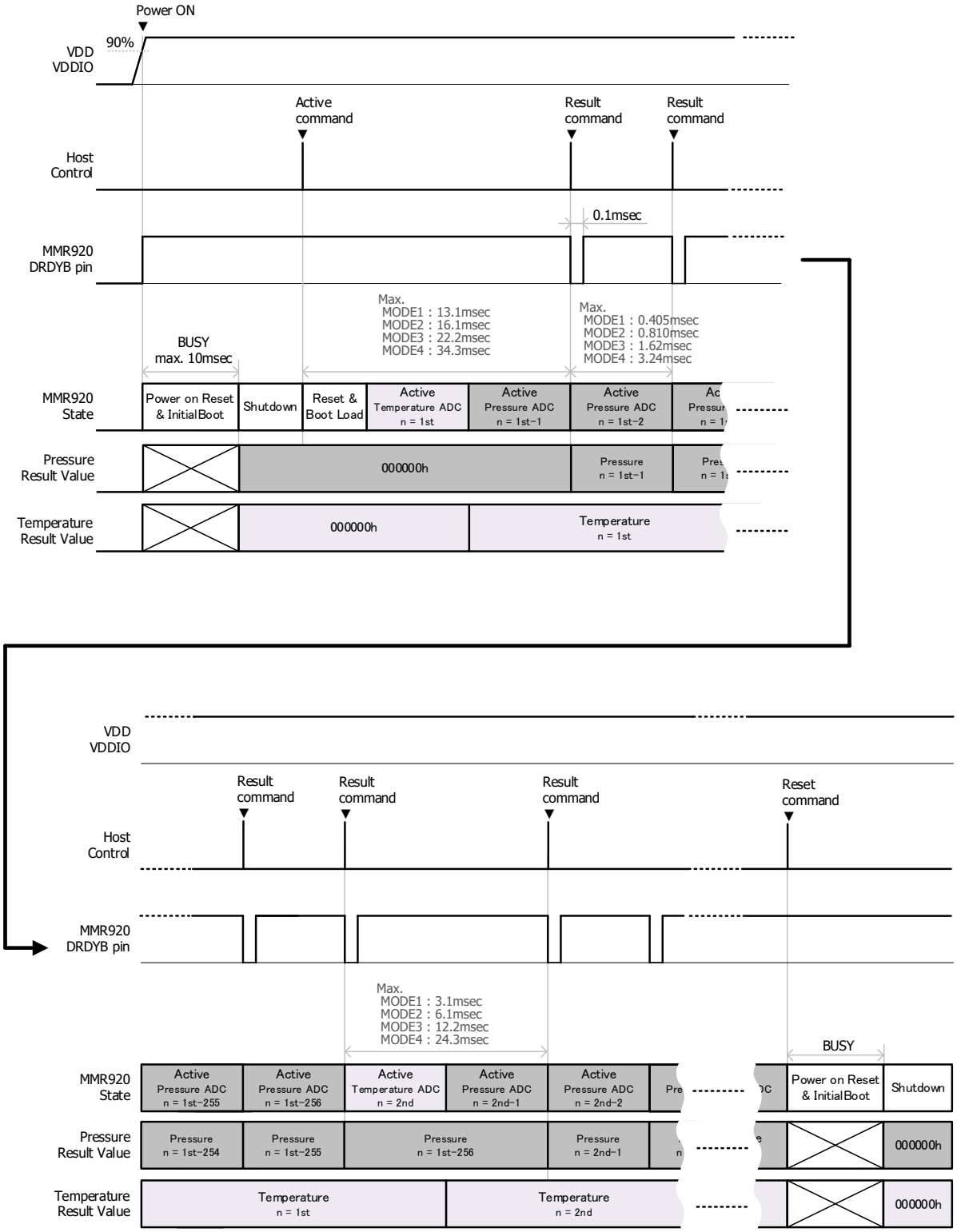

Fig. 9 Timing Chart

©2024 Mitsumi Electric Co., Ltd. All rights reserved. The contents of this document are subject to change without notice. The details listed here are not a guarantee.

Downloaded from Arrow.com.

Low Pass Filter

Noise reduction is possible by a built-in Low Pass Filter. Pressure value with Low Pass Filter applied can be got using command code 0xC4. Cutoff frequency fc can be changed by filter coefficient 4Bytes calculated by the equation (1). Filter coefficient is written to the IC using the MACRAM Write command in the idle state. Filter coefficient is cleared to the default value in the shutdown state.

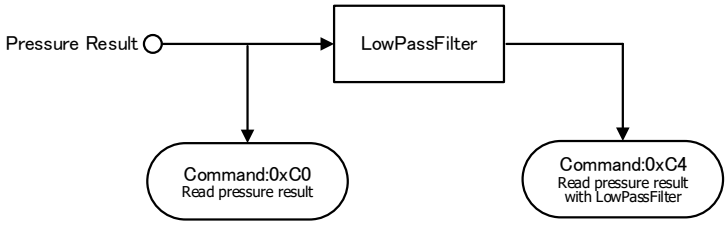

Fig. 10 Low Pass Filter Configuration

Table 7 example of character with Low Pass Filter

Cutoff frequency		No filter	fc=100Hz	fc=10Hz
Pressure effective resolution example [cmH2O RMS]	MODE1	0.019	0.012	0.0068
	MODE2	0.008	0.0064	0.0034
	MODE3	0.0044	0.0036	0.0022
	MODE4	0.0025	0.0023	0.0013

Filter coefficient equation

$$\text{Filter coefficient(4Bytes)} = 2^{27} \times \exp(-2\pi \times f_c \times t_{con}) \cdots\cdots\cdots\cdots\cdots\cdots\text{(Eq1)}$$

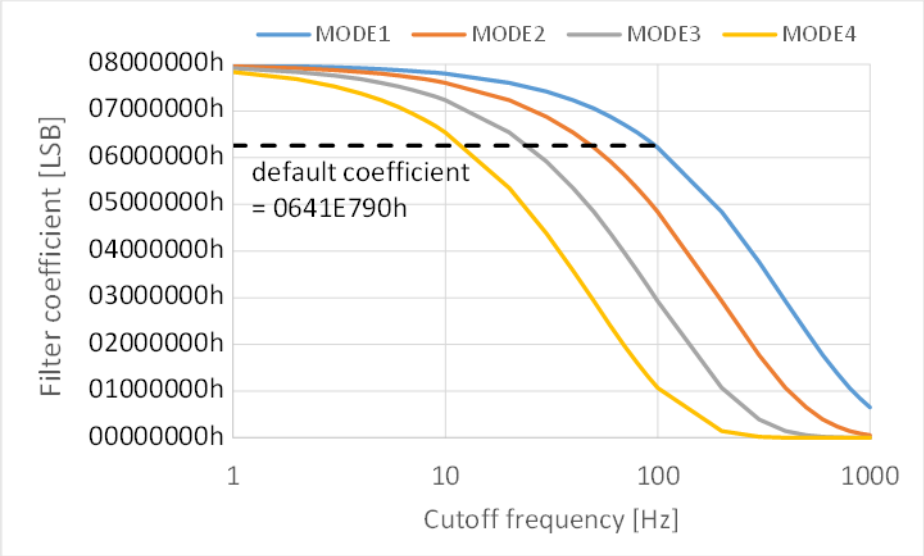

Fig. 11 Filter coefficient example

©2024 Mitsumi Electric Co., Ltd. All rights reserved. The contents of this document are subject to change without notice. The details listed here are not a guarantee.

Downloaded from Arrow.com.

SERIAL COMMUNICATION INTERFACE

It supports SPI and I2C as an interface for serial communication. SPI (max. 5Mbps) or I2C (max.3.4Mbps) can be selected by PSEL terminal. When PSEL terminal is set to High, SPI will be selected. When it is set to Low, I2C will be selected. Please set High voltage of PSEL terminal the same potential as VDDIO terminal.

Baud rate

※This item is not inspected at the time of shipment.
(unless otherwise specified, Ta=25°C, VDD=3.0~3.6V)

Item	Symbol	Conditions	Min.	Typ.	Max.	Unit
I2C communication speed	BR_{I2C1}	VDDIO ≧ 2.0V Cb≦100pF	-	-	3.4	Mbps
	BR_{I2C2}	VDDIO < 2.0V Cb≦100pF	-	-	0.4	
	BR_{I2C3}	VDDIO ≧ 2.0V Cb≦400pF	-	-	1.7	
	BR_{I2C4}	VDDIO < 2.0V Cb≦400pF	-	-	0.4	
SPI communication speed	BR_{SPI1}	VDDIO ≧ 2.0V Cb≦100pF	-	-	5.0	
	BR_{SPI2}	VDDIO < 2.0V Cb≦100pF	-	-	1.0	
	BR_{SPI3}	VDDIO ≧ 2.0V Cb≦400pF	-	-	2.5	
	BR_{SPI4}	VDDIO < 2.0V Cb≦400pF	-	-	0.5	

©2024 Mitsumi Electric Co., Ltd. All rights reserved. The contents of this document are subject to change without notice. The details listed here are not a guarantee.

Downloaded from Arrow.com.

SPI AC Characteristics

※This item is not inspected at the time of shipment.

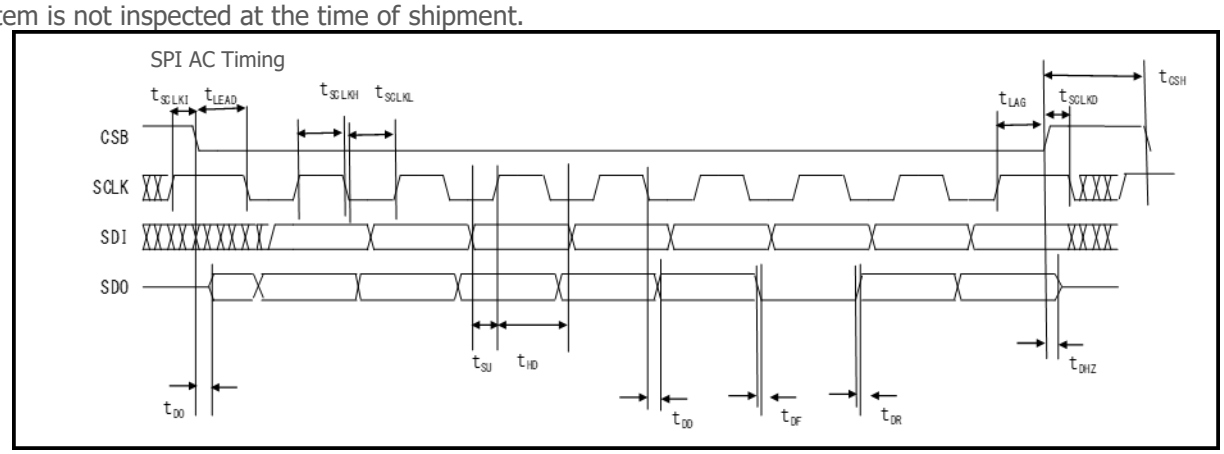

Fig. 12 SPI AC timing chart

Table 8 SPI AC Characteristics

Items	Symbol	VDDIO<2V		VDDIO≧2V		Unit
		min.	max.	min.	max.	
SCLK frequency (Duty 50±10%)	f_{SCLK}	-	1	-	5	MHz
SCLK High period (90%～90%)	t_{SCLKH}	400		80	-	ns
SCLK Low period (10%～10%)	t_{SCLKL}	400		80	-	ns
SCLK wait time	t_{SCLKI}	500	-	100	-	ns
SCLK Delay time	t_{SCLKD}	0	-	0	-	ns
CSB High period (90%～90%)	t_{CSH}	1000	-	200	-	ns
Time from CSB falling to SCLK falling	t_{LEAD}	0	-	0	-	ns
Time from SCLK rising to CSB rising	t_{LAG}	500	-	100	-	ns
SDI setup time	t_{SU}	100	-	10	-	ns
SDI hold time	t_{HD}	10	-	10	-	ns
SDO rise time (Load 100pF)(10%～90%)	t_{DR}		50	-	50	ns
SDO fall time (Load 100pF)(10%～90%)	t_{DF}		50	-	50	ns
SDO output delay time (Load 100pF)	t_{DD}	-	120	-	60	ns
Time from CSB falling to SDO output (Load 100pF)	t_{DO}	-	120	-	60	ns
Time from CSB rising to SDO output HiZ (Load 100pF)	t_{DHZ}	-	170	-	170	ns

©2024 Mitsumi Electric Co., Ltd. All rights reserved. The contents of this document are subject to change without notice. The details listed here are not a guarantee.

Downloaded from Arrow.com.

SPI format

The basic format of SPI is shown below. The relationship between clock(SCLK) and data(SDI/SDO) is Mode3. Data send/receive is started when CSB becomes low level from the status when SCLK is high level. Data is updated on falling edges of the SCLK, and sampled on rising edges of the SCLK. Data send/receive is ended when CSB becomes high level from the status when SCLK is high level.

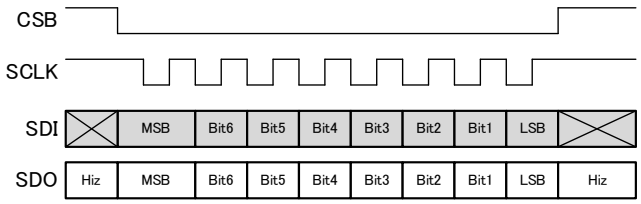

Fig. 13 SPI Waveform

SPI Write format

Please send command code of 8 bits. When their commands are received, it turns over ACK to 8 bits.

Fig. 14 SPI Write format

SPI Write/Read format

Please send command code of 8 bits. When the command is received, it turns over ACK to 8 bits and it outputs the data MSB first.

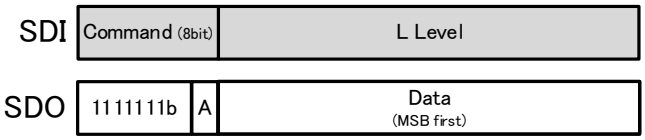

Fig. 15 SPI Write/Read format

©2024 Mitsumi Electric Co., Ltd. All rights reserved. The contents of this document are subject to change without notice. The details listed here are not a guarantee.

Downloaded from Arrow.com.

SPI MACRAM Write format

Please send command code (0xE4) and memory address (0x6F). When command is received, it turns over ACK to 8 bits. Then please send Filter coefficient of 4Bytes MSB first. After receiving data, it becomes busy for the maximum 15msec in order to data- writing. During this time, 00h which indicates busy is output. When data- writing is completed, 01h is output.

How to discern busy:

After sending write data, continue to input clock with maintaining communicating mode. Then, 00h is output to indicate that it is busy. When the writing has been completed, 01h will be output. *The "00h" to indicate busy may sometimes be output or not depending on the clock frequency.

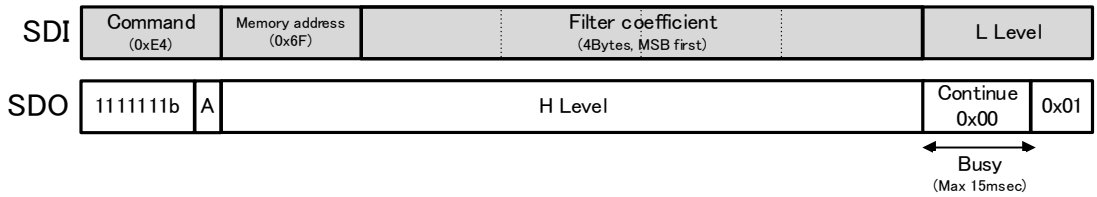

Fig. 16 SPI MACRAM Write format

SPI Register Write format

Please send command code (0xE0) and memory address (0x3C or 0x3D). When command is received, it turns over ACK to 8 bits. Then please send data of 8bits (0x80 or 0x02).

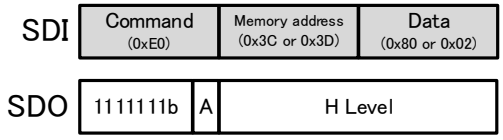

Fig. 17 SPI Register Write format

SPI NVM Read format

Please send command code (0xD6) and memory address (0x30). When command is received, it turns over ACK to 8 bits. After receiving memory address, the internal area becomes busy for the maximum 25usec in order to prepare for data sending. During this time, 0x00 which indicates busy is output. When the preparation of data is completed, 0x01 is output, and continuously, 1byte data is output.

How to discern busy:

After sending Memory address, continue to input clock with maintaining communicating mode. Then, 0x00 is output to indicate that it is busy. When the preparation of data is completed, 0x01 will be output. *The "00h" to indicate busy may sometimes be output or not depending on the clock frequency.

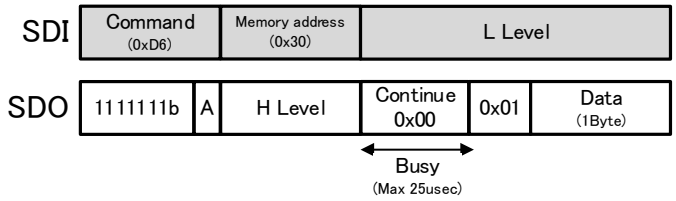

Fig. 18 SPI NVM Read format

SPI ACK

When command code which is send in each SPI format is received, it outputs L level to 8 bits as ACK. If command code is not accepted or command code is not valid, it outputs H Level to 8 bits as NACK.

©2024 Mitsumi Electric Co., Ltd. All rights reserved. The contents of this document are subject to change without notice. The details listed here are not a guarantee.

Downloaded from Arrow.com.

I2C AC Characteristics

※This item is not inspected at the time of shipment

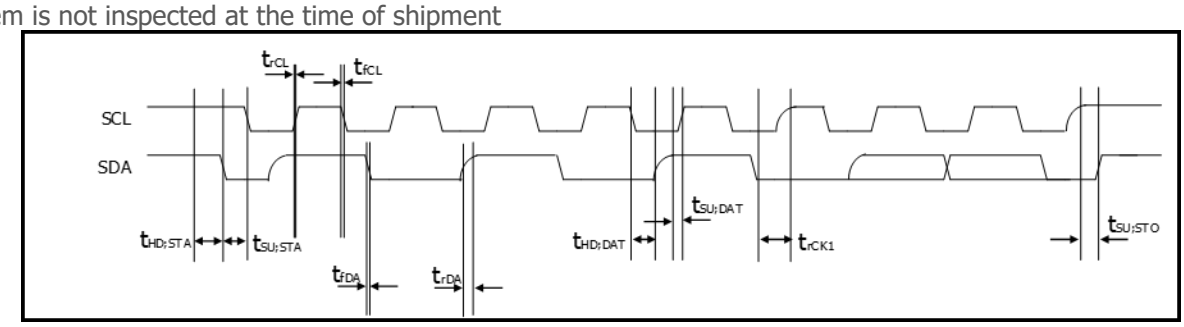

Fig. 19 I2C AC timing chart

Table 9 I2C AC Characteristics

Items	Symbol	VDDIO < 2.0V		VDDIO ≧ 2.0V				Unit
		Fast mode		Hsmode				
				Cb=100pF		Cb=400pF		
		min.	max.	min.	max.	min.	max.	
SCL frequency	f_{SCL}	0	400kHz	0	3.4	0	1.7	MHz
Start condition setup time	$t_{SU;STA}$	600	-	160	-	160	-	ns
Start condition hold time	$t_{HD;STA}$	600	-	160	-	160	-	ns
Stop condition setup time	$t_{SU;STO}$	600	-	160	-	160	-	ns
Data setup time	$t_{SU;DAT}$	100	-	20	-	20	-	ns
Data hold time (note[13])	$t_{HD;DAT}$	20	-	20	70	20	150	ns
SCL rise time	t_{rCL}	-	300	10	40	20	80	ns
Rise time of SCL after ACK (When clock stretch is released.)	t_{rCL1}	-	300	10	80	20	160	ns
SCL fall time	t_{fCL}	10	300	10	-	20	80	ns
SDA rise time	t_{rDA}	-	300	10	80	20	160	ns
SDA fall time	t_{fDA}	10	300	10	80	20	160	ns

note[13]: This product does not have the function to retain data in SDA.
Please ensure the hold of SDA with 20nsec for the area where SCL falling edge is not defined.

©2024 Mitsumi Electric Co., Ltd. All rights reserved. The contents of this document are subject to change without notice. The details listed here are not a guarantee.

Downloaded from Arrow.com.

I2C format

It conforms to I2C protocol except some special formats. I2C address is the total of 8 bits. The first 7 bits are slave address and the rest of 1 bit is R/W bit. Slave address for MMR920 (7 bits) is 0x67. I2C address (8 bits) will be 0xCE (Write) and 0xCF (Read) by combining with R/W bit.

Table 10 I2C address

	I2C Address (8 bit)							
	Slave address (7 bit)							R/W bit
HEX.	A6	A5	A4	A3	A2	A1	A0	
0xCE	1	1	0	0	1	1	1	0
0xCF	1	1	0	0	1	1	1	1

I2C Write format

Please send I2C address of 8 bits (0xCE) by Write Mode. Then please send command code.

Fig. 20 Write format

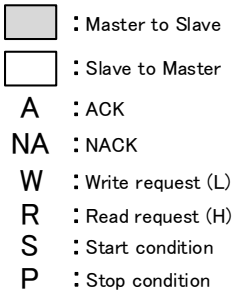

I2C Combined format

Please send I2C address (0xCE) and the command code by Write Mode. Then please send I2C address (0xCF) by Read Mode. It outputs the data MSB first

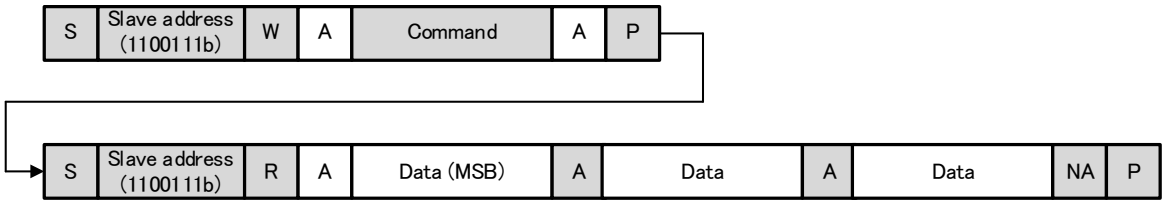

Fig. 21 I2C Combined format

©2024 Mitsumi Electric Co., Ltd. All rights reserved. The contents of this document are subject to change without notice. The details listed here are not a guarantee.

Downloaded from Arrow.com.

I2C MACRAM Write format (special format)

It is a format unique to this product that does not partially conform to I2C protocol. Please send I2C address (0xCE), the command (0xE4), and memory address (0x6F) by Write Mode. Then send the data of 4Bytes Filter coefficient. At this time, please be careful that NACK is returned after transmitting LSB. After receiving data, it becomes busy for the maximum 15msec in order to data- writing. During this time, SCL is put in clock stretch. When data- writing is completed, SCL is released.

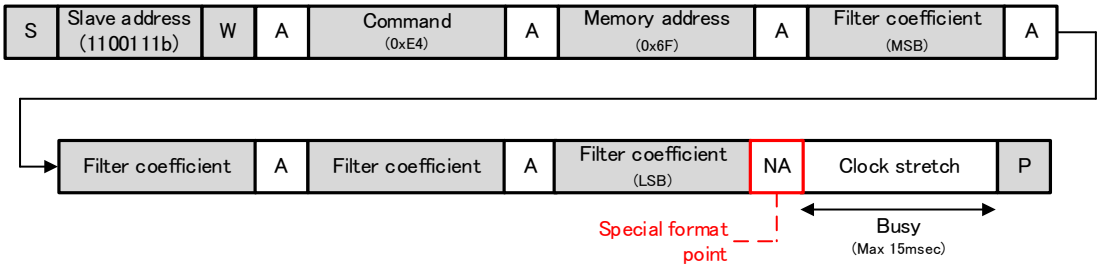

Fig. 22 I2C MACRAM Write format

I2C Register Write format

Please send I2C address 0xCE), the command (0xE0), and memory address (0x3C or 0x3D) by Write Mode. Then send the data of 1Byte (0x80 or 0x02).

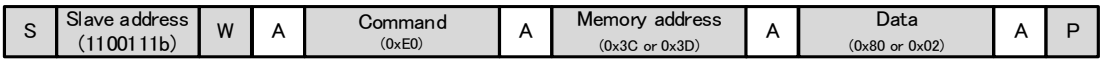

Fig. 23 I2C Register Write format

I2C NVM Read format

Please send I2C address (0xCE) command code (0xD6), and memory address (0x30) by Write Mode. After receiving memory address, it becomes busy during preparing to send data. During this time, SCL is in a clock stretch. SCL is released when data-preparation is completed. Then please send I2C address (0xCF) by Read Mode. When the address is received, 1byte data is output.

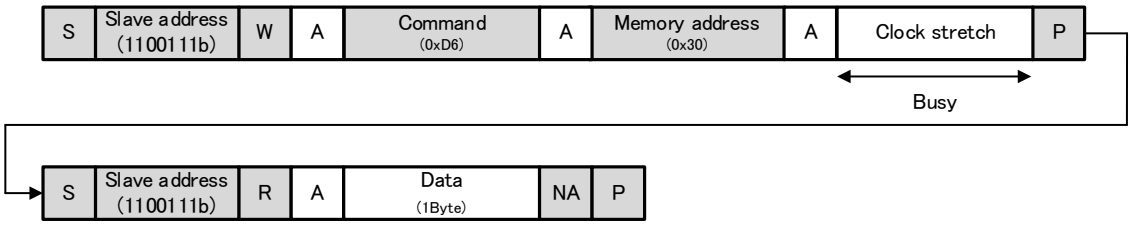

Fig. 24 I2C NVM Read format

©2024 Mitsumi Electric Co., Ltd. All rights reserved. The contents of this document are subject to change without notice. The details listed here are not a guarantee.

Downloaded from Arrow.com.

TYPICAL APPLICATION CIRCUIT

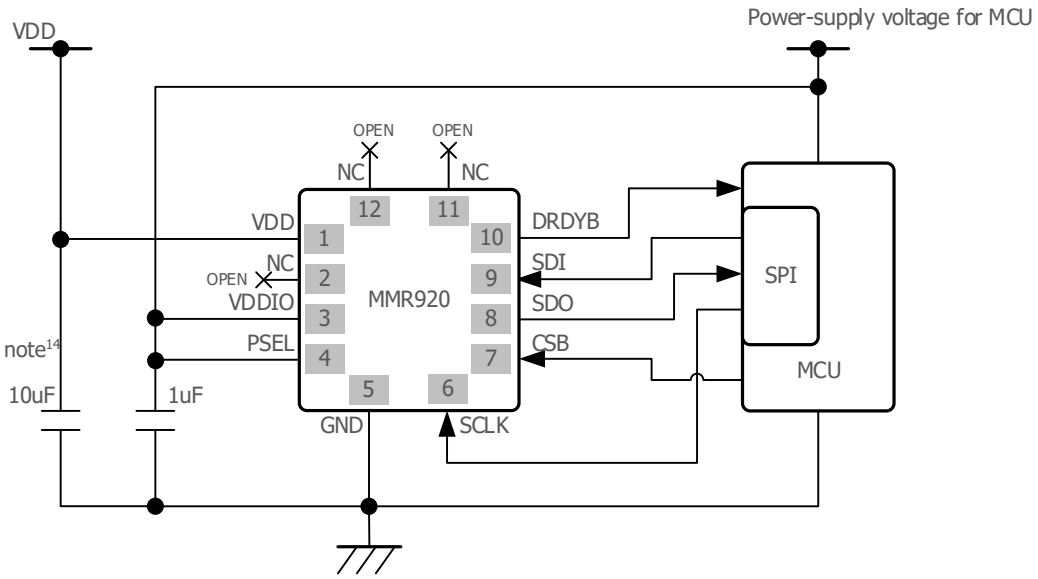

Fig. 25 Typical Electrical Connection (SPI)

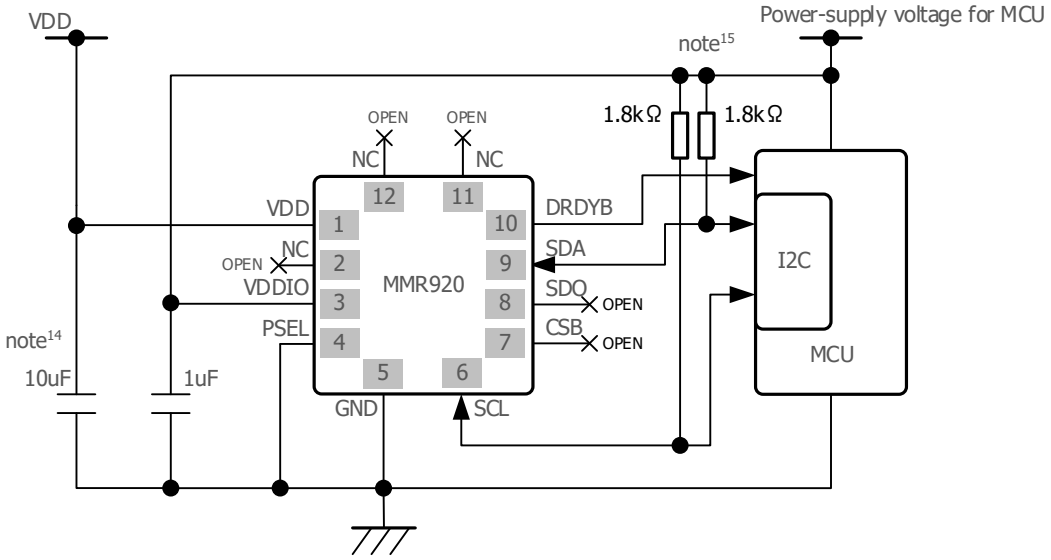

Fig. 26 Typical Electrical Connection (I2C)

note[14]: Place the bypass capacitor for the power supply as close to the IC as possible.

note[15]: The longer the bus line on the board, the larger the parasitic capacitance and communication waveform rounding becomes.
In this case, reduce the pull-up resistor to improve the communication waveform. (Min 1.2k ohm)
※It should be designed in accordance with "NXP's UM10204: I2C-bus specification and user manual".

©2024 Mitsumi Electric Co., Ltd. All rights reserved. The contents of this document are subject to change without notice. The details listed here are not a guarantee.

Downloaded from Arrow.com.

TYPICAL PERFORMANCE CHARACTERISTICS

Analog characteristics

(unless otherwise specified, Ta=25°C, VDD=VDDIO=3.3V)

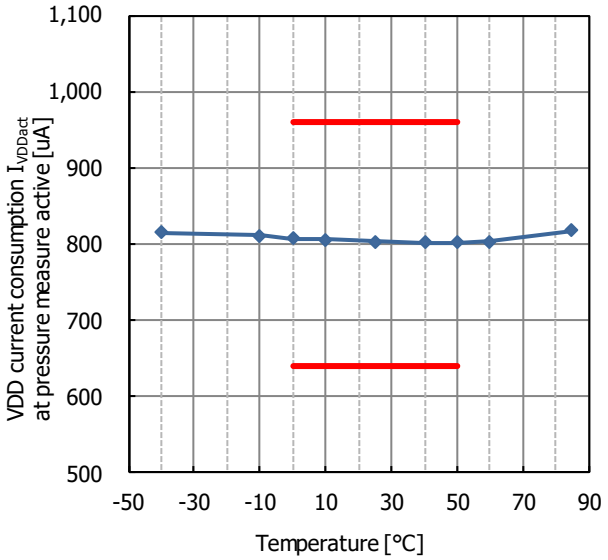

Fig. 27.1 VDD current consumption I_{VDDact} at pressure measure active temperature characteristic

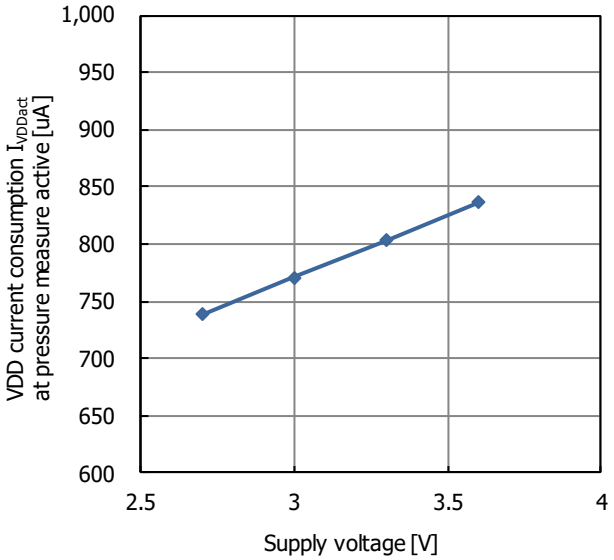

Fig. 27.2 VDD current consumption I_{VDDact} at pressure measure active supply voltage characteristic

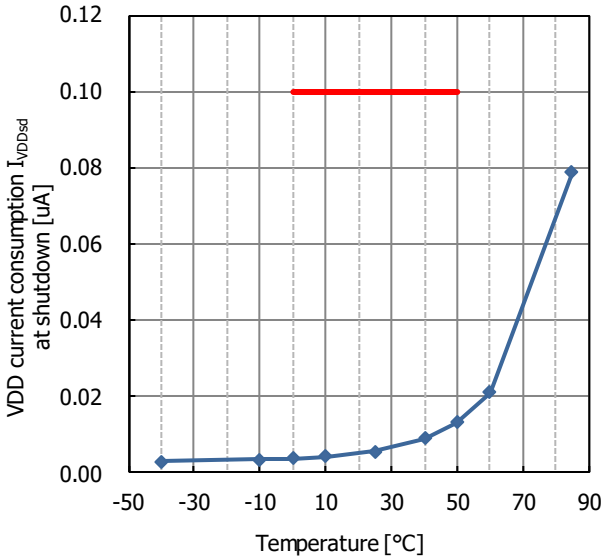

Fig. 27.3 VDD current consumption I_{VDDsd} at shutdown temperature characteristic

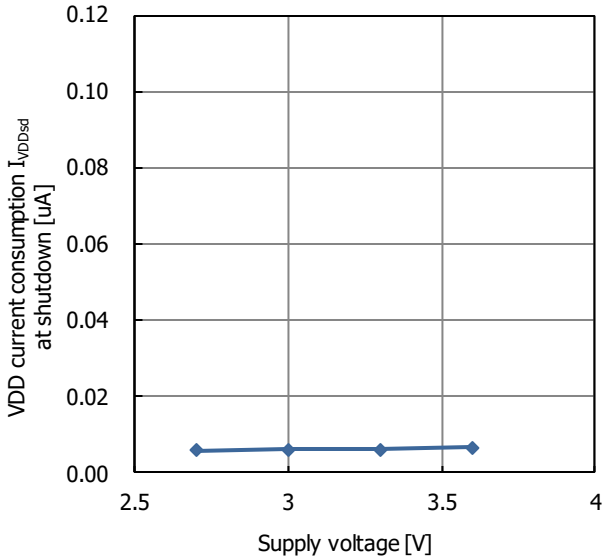

Fig. 27.4 VDD current consumption I_{VDDsd} at shutdown supply voltage characteristic

©2024 Mitsumi Electric Co., Ltd. All rights reserved. The contents of this document are subject to change without notice. The details listed here are not a guarantee.

Downloaded from Arrow.com.

(unless otherwise specified, Ta=25°C,VDD=VDDIO=3.3V)

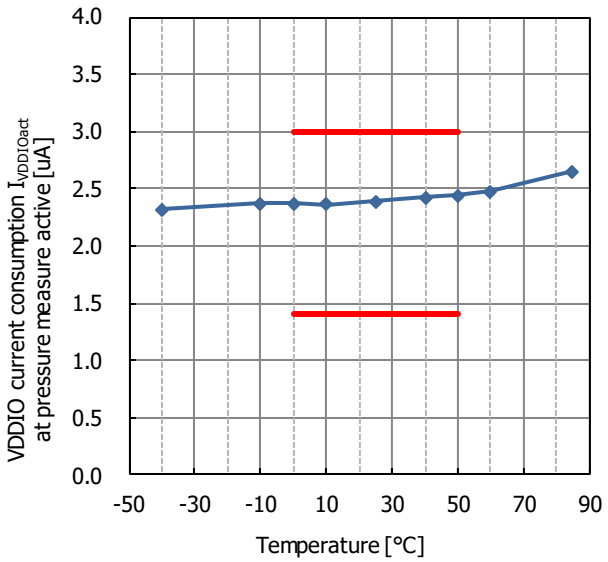

Fig. 27.5 VDDIO current consumption $I_{VDDIOact}$ at pressure measure active temperature characteristic

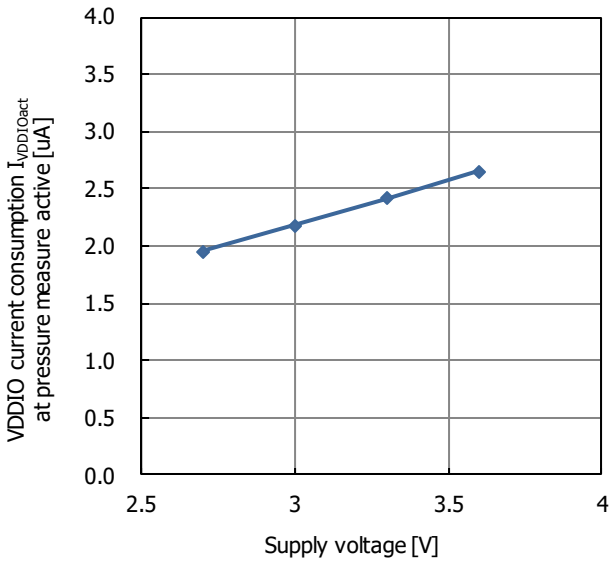

Fig. 27.6 VDDIO current consumption $I_{VDDIOact}$ at pressure measure active supply voltage characteristic

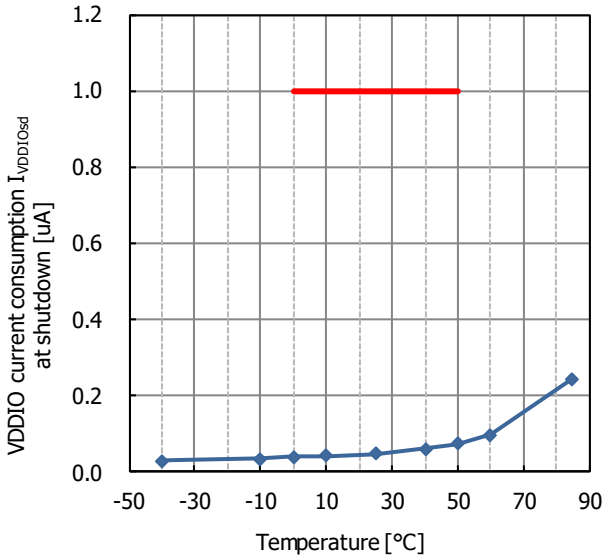

Fig. 27.7 VDDIO current consumption $I_{VDDIOsd}$ at shutdown temperature characteristic

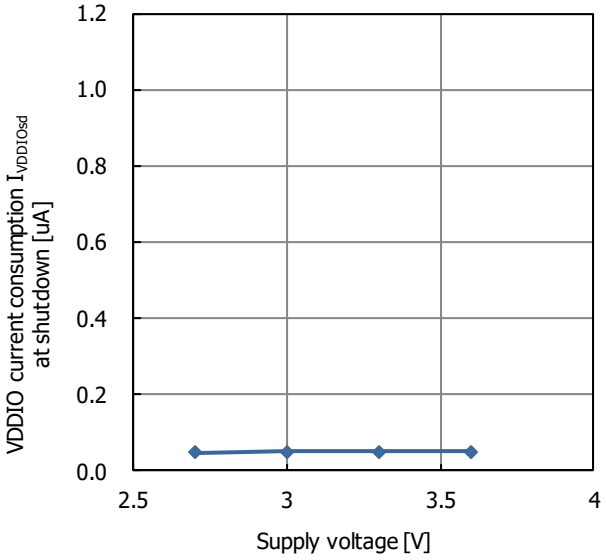

Fig. 27.8 VDDIO current consumption $I_{VDDIOsd}$ at shutdown supply voltage characteristic

©2024 Mitsumi Electric Co., Ltd. All rights reserved. The contents of this document are subject to change without notice. The details listed here are not a guarantee.

Downloaded from Arrow.com.

(unless otherwise specified, Ta=25°C,VDD=VDDIO=3.3V)

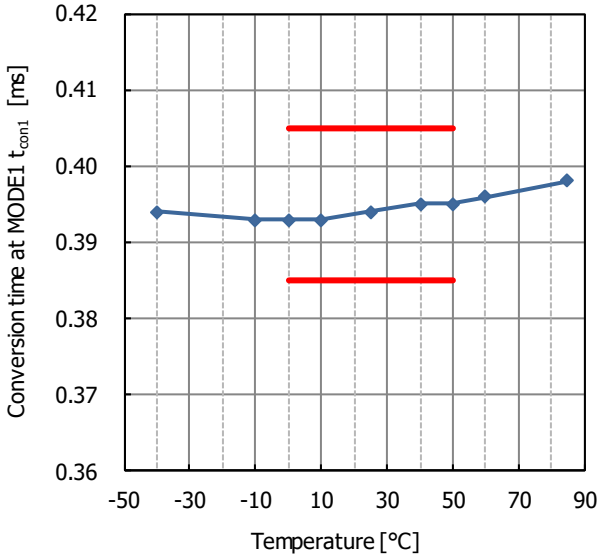

Fig. 27.9 Conversion time at MODE 1 temperature characteristic

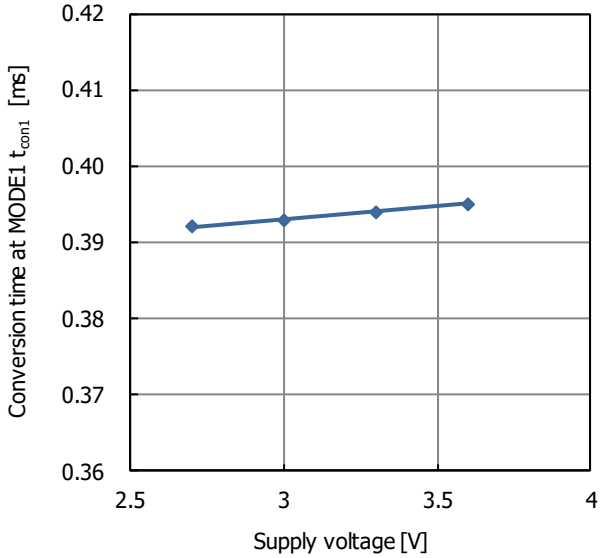

Fig. 27.10 Conversion time at MODE 1 supply voltage characteristic

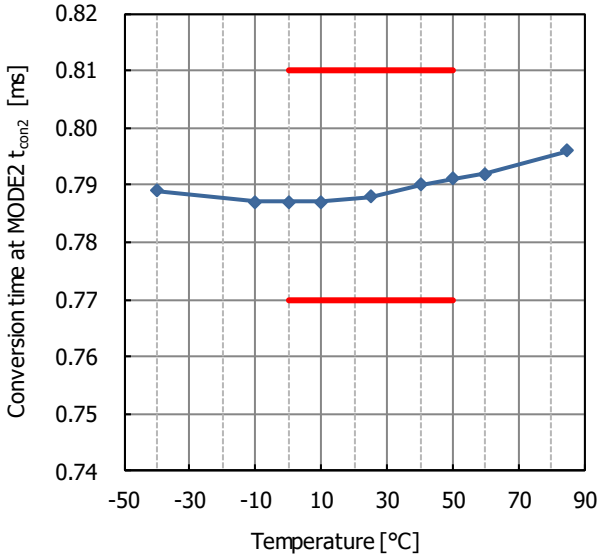

Fig. 27.11 Conversion time at MODE 2 temperature characteristic

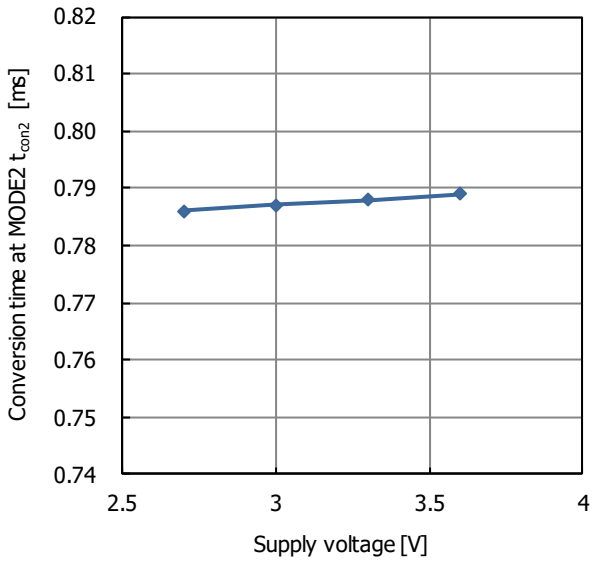

Fig. 27.12 Conversion time at MODE 2 supply voltage characteristic

©2024 Mitsumi Electric Co., Ltd. All rights reserved. The contents of this document are subject to change without notice. The details listed here are not a guarantee.

Downloaded from Arrow.com.

(unless otherwise specified, Ta=25°C,VDD=VDDIO=3.3V)

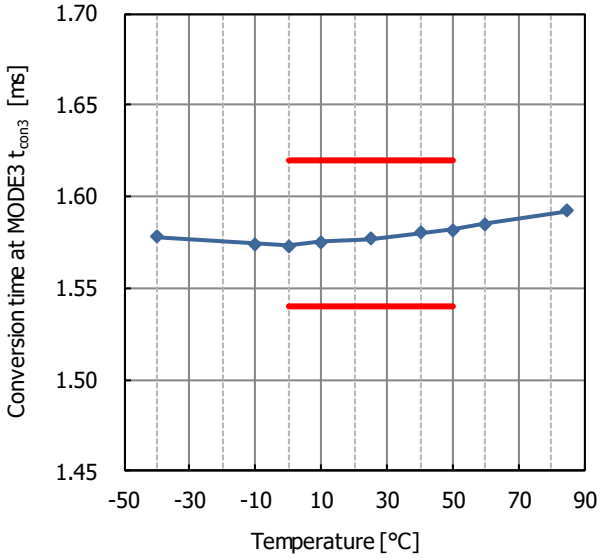

Fig. 27.13 Conversion time at MODE 3 temperature characteristic

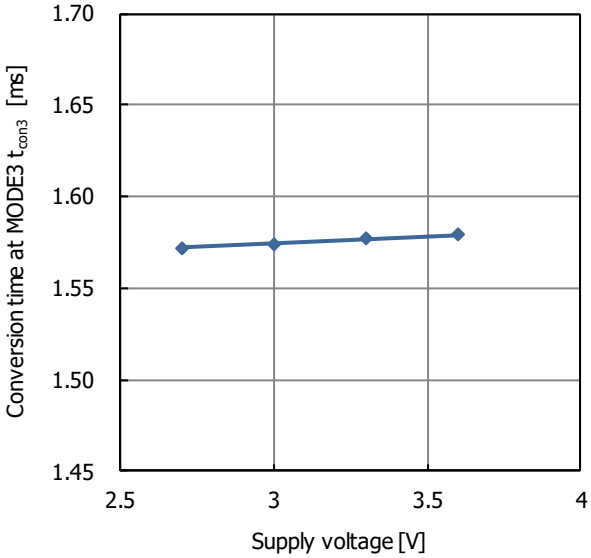

Fig. 27.14 Conversion time at MODE 3 supply voltage characteristic

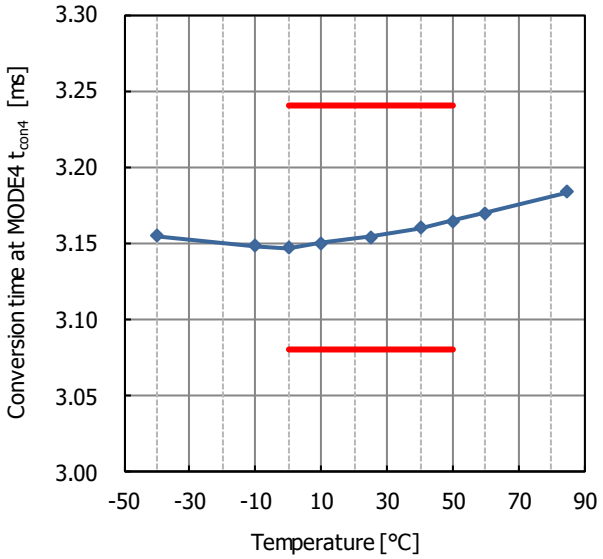

Fig. 27.15 Conversion time at MODE 4 temperature characteristic

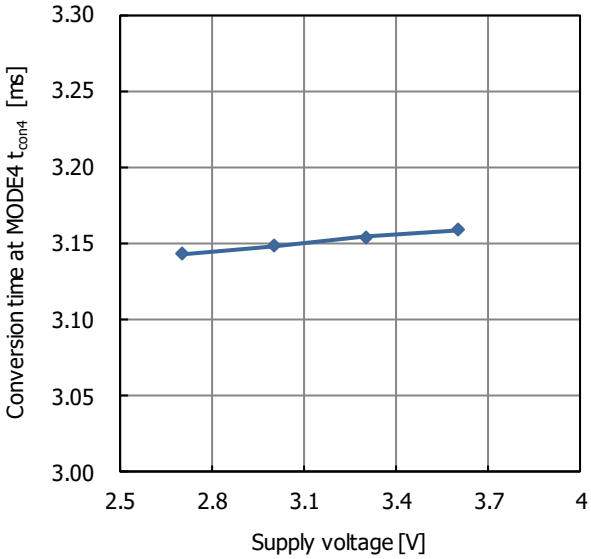

Fig. 27.16 Conversion time at MODE 4 supply voltage characteristic

©2024 Mitsumi Electric Co., Ltd. All rights reserved. The contents of this document are subject to change without notice. The details listed here are not a guarantee.

Downloaded from Arrow.com.

C02 rank Pressure sensor characteristics

(unless otherwise specified, Ta=25°C,VDD=VDDIO=3.3V)
TBD

C04 rank Pressure sensor characteristics

(unless otherwise specified, Ta=25°C,VDD=VDDIO=3.3V)

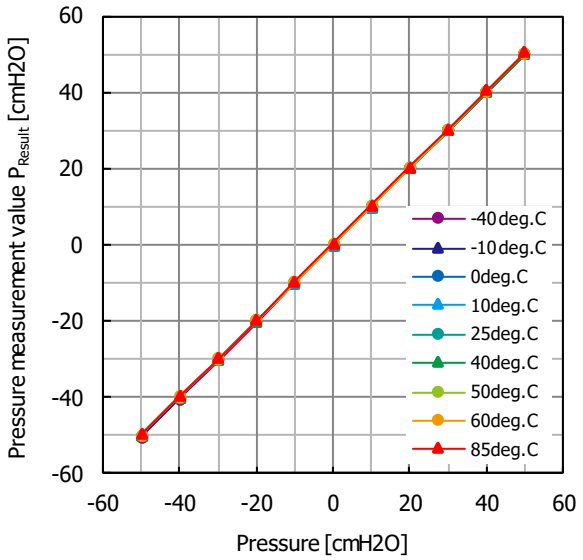

Fig. 28.1 Pressure measurement value P_{Result} temperature characteristic

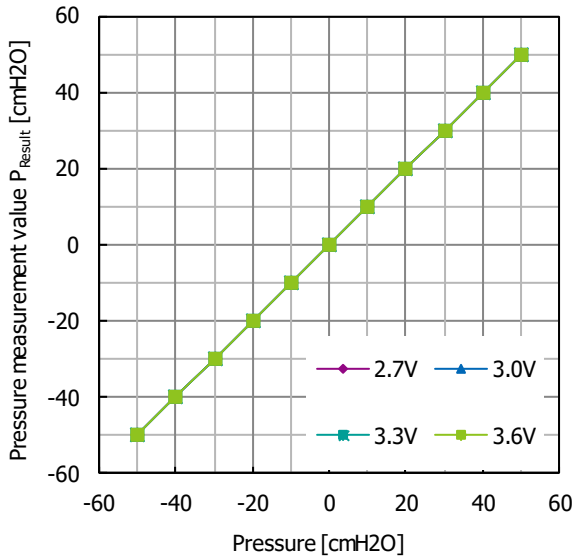

Fig. 28.2 Pressure measurement value P_{Result} supply voltage characteristic

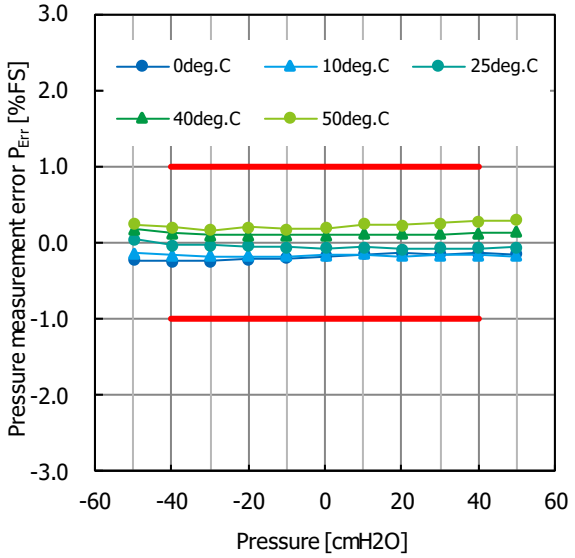

Fig. 28.3 Pressure measurement error P_{Err} temperature characteristic 0~50deg.C

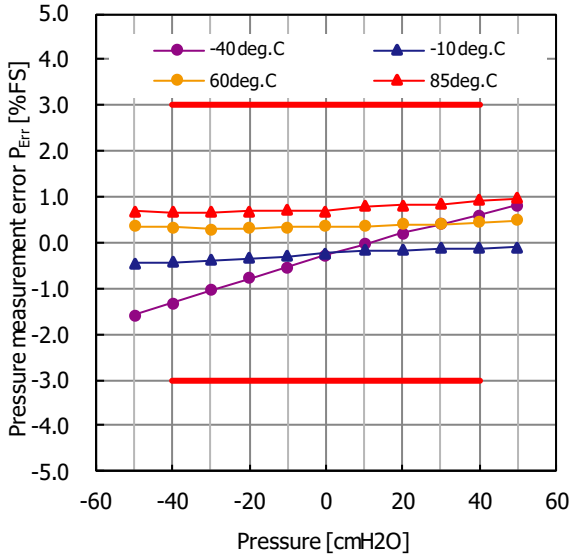

Fig. 28.4 Pressure measurement error P_{Err} temperature characteristic -40~85deg.C

©2024 Mitsumi Electric Co., Ltd. All rights reserved. The contents of this document are subject to change without notice. The details listed here are not a guarantee.

Downloaded from Arrow.com.

(unless otherwise specified, Ta=25°C,VDD=VDDIO=3.3V)

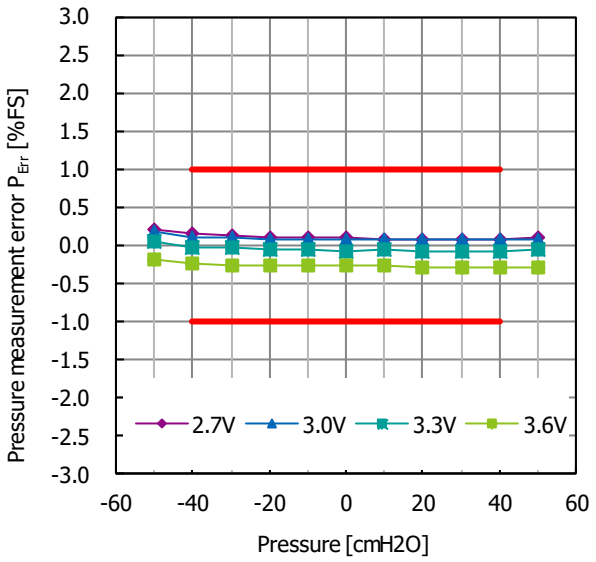

Fig. 28.5 Pressure measurement error P_{Err} supply voltage characteristic

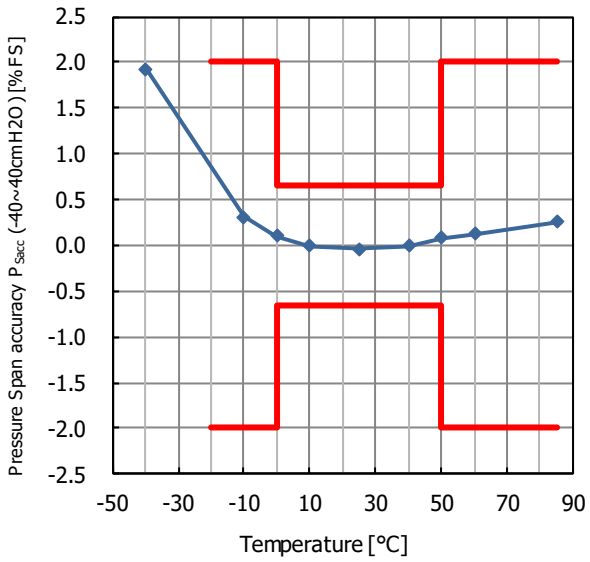

Fig. 28.6 Pressure Span accuracy P_{Sacc} temperature characteristic

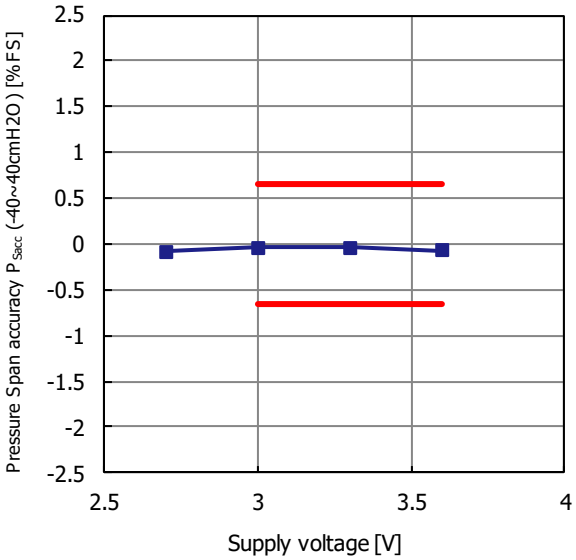

Fig. 28.7 Pressure Span accuracy P_{Sacc} supply voltage characteristic

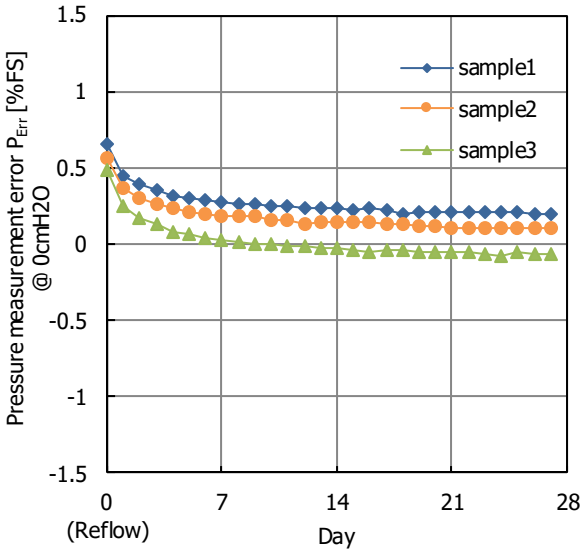

Fig. 28.8 Pressure measurement error P_{Err} @0cmH2O Reflow drift

©2024 Mitsumi Electric Co., Ltd. All rights reserved. The contents of this document are subject to change without notice. The details listed here are not a guarantee.

Downloaded from Arrow.com.

C07 rank Pressure sensor characteristics

(unless otherwise specified, Ta=25°C,VDD=VDDIO=3.3V)
TBD

C10 rank Pressure sensor characteristics

(unless otherwise specified, Ta=25°C,VDD=VDDIO=3.3V)

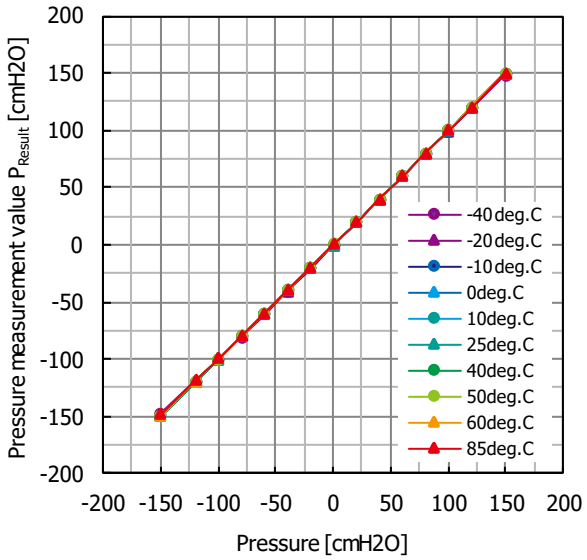

Fig. 29.1 Pressure measurement value P_{Result} temperature characteristic

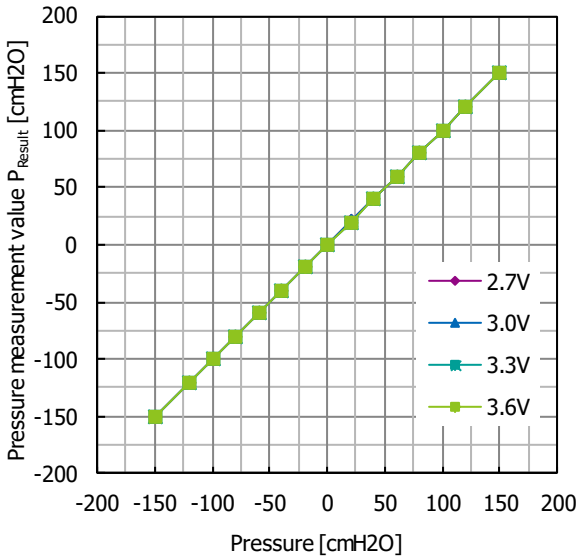

Fig. 29.2 Pressure measurement value P_{Result} supply voltage characteristic

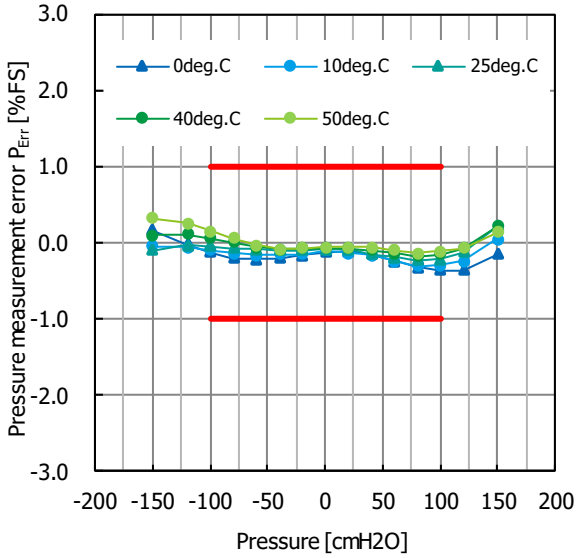

Fig. 29.3 Pressure measurement error P_{Err} temperature characteristic 0~50deg.C

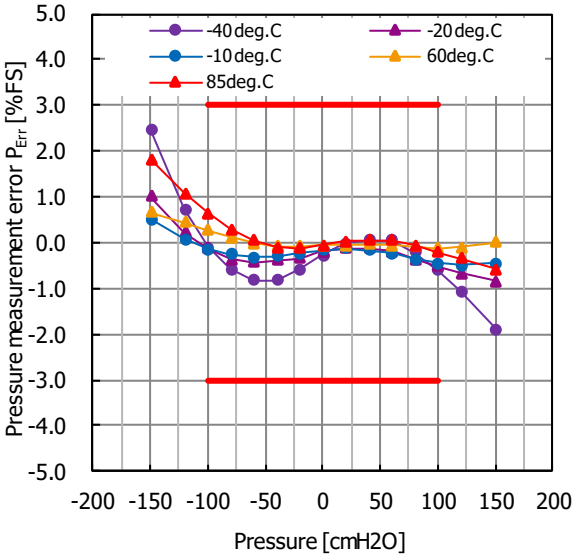

Fig. 29.4 Pressure measurement error P_{Err} temperature characteristic -40~85deg.C

©2024 Mitsumi Electric Co., Ltd. All rights reserved. The contents of this document are subject to change without notice. The details listed here are not a guarantee.

Downloaded from Arrow.com.

(unless otherwise specified, Ta=25°C,VDD=VDDIO=3.3V)

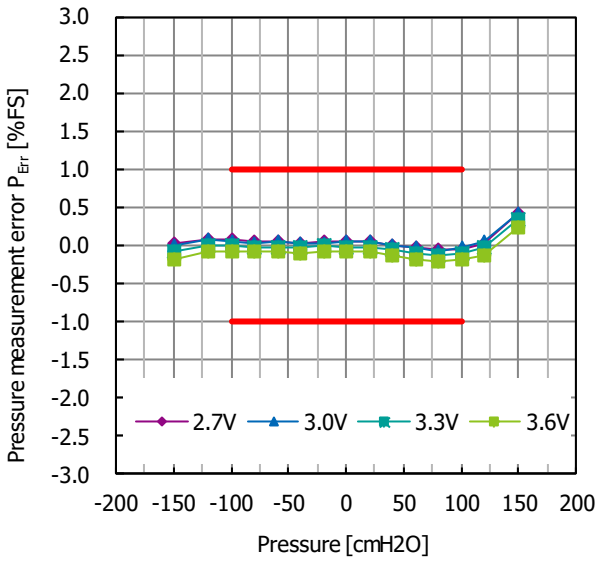

Fig. 29.5 Pressure measurement error P_{Err} supply voltage characteristic

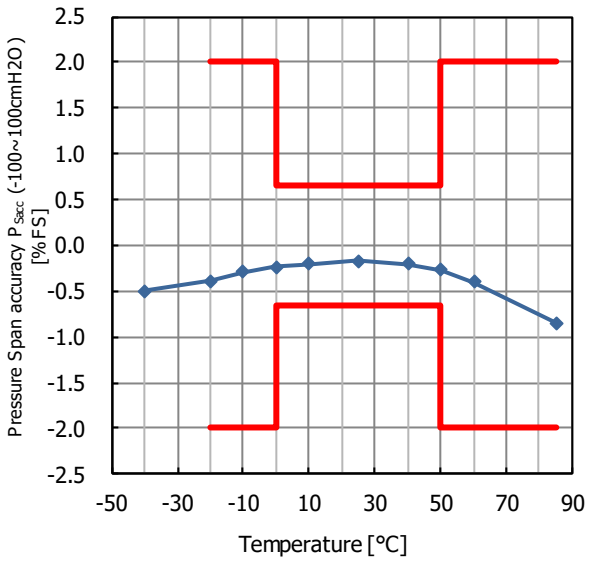

Fig. 29.6 Pressure Span accuracy P_{Sacc} temperature characteristic

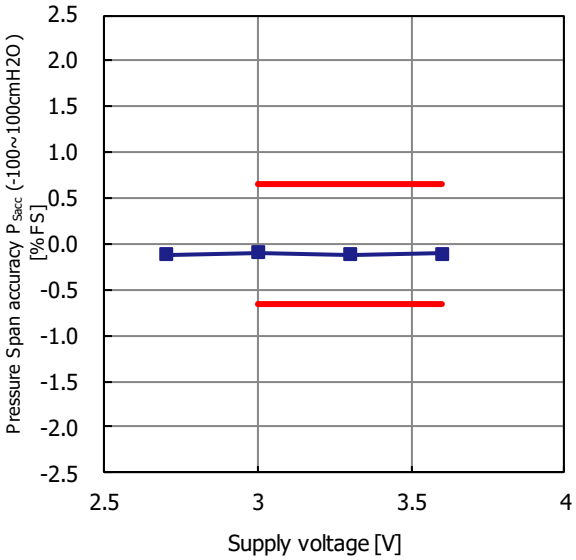

Fig. 29.7 Pressure Span accuracy P_{Sacc} supply voltage characteristic

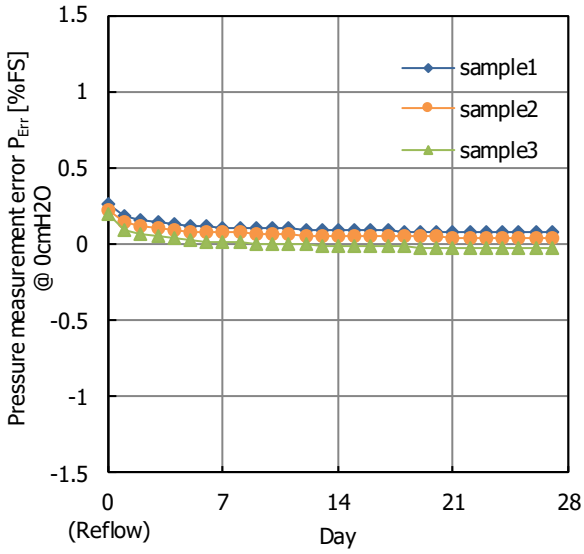

Fig. 29.8 Pressure measurement error P_{Err} @0cmH2O Reflow drift

©2024 Mitsumi Electric Co., Ltd. All rights reserved. The contents of this document are subject to change without notice. The details listed here are not a guarantee.

Downloaded from Arrow.com.

PACKAGE STRUCTURE

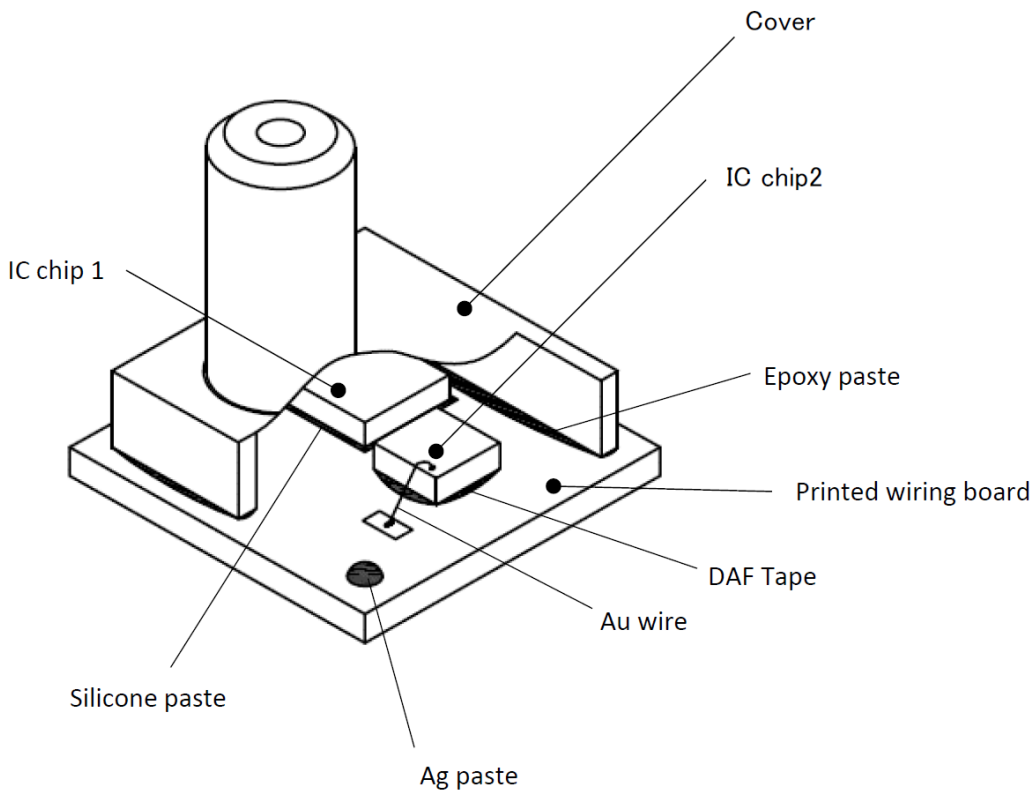

Part Name	Material	Wetted Material	Remarks
IC chip 1	Silicon (Si)	✓	
	Aluminium (Al), Tungsten (W)		
IC chip 2	Si, Al, W, Copper (Cu), Tantalum (Ta)		
Printed wiring board	Epoxy resin, Glass fiber, Acrylic resin	✓	
	Cu, Nickel (Ni), Gold (Au)		
Cover	PPS, Glass fiber, Carbon black	✓	
Au wire	Au		
Silicone paste	Silicone, SiO2	✓	
DAF Tape	Epoxy resin		
Epoxy paste	Epoxy resin, SiO2, Carbon Black	✓	
Ag paste	Silver (Ag), Epoxy resin		

©2024 Mitsumi Electric Co., Ltd. All rights reserved. The contents of this document are subject to change without notice. The details listed here are not a guarantee.

Downloaded from Arrow.com.

DIMENSIONS

PACKAGE : MEMS-12B

UNIT	mm

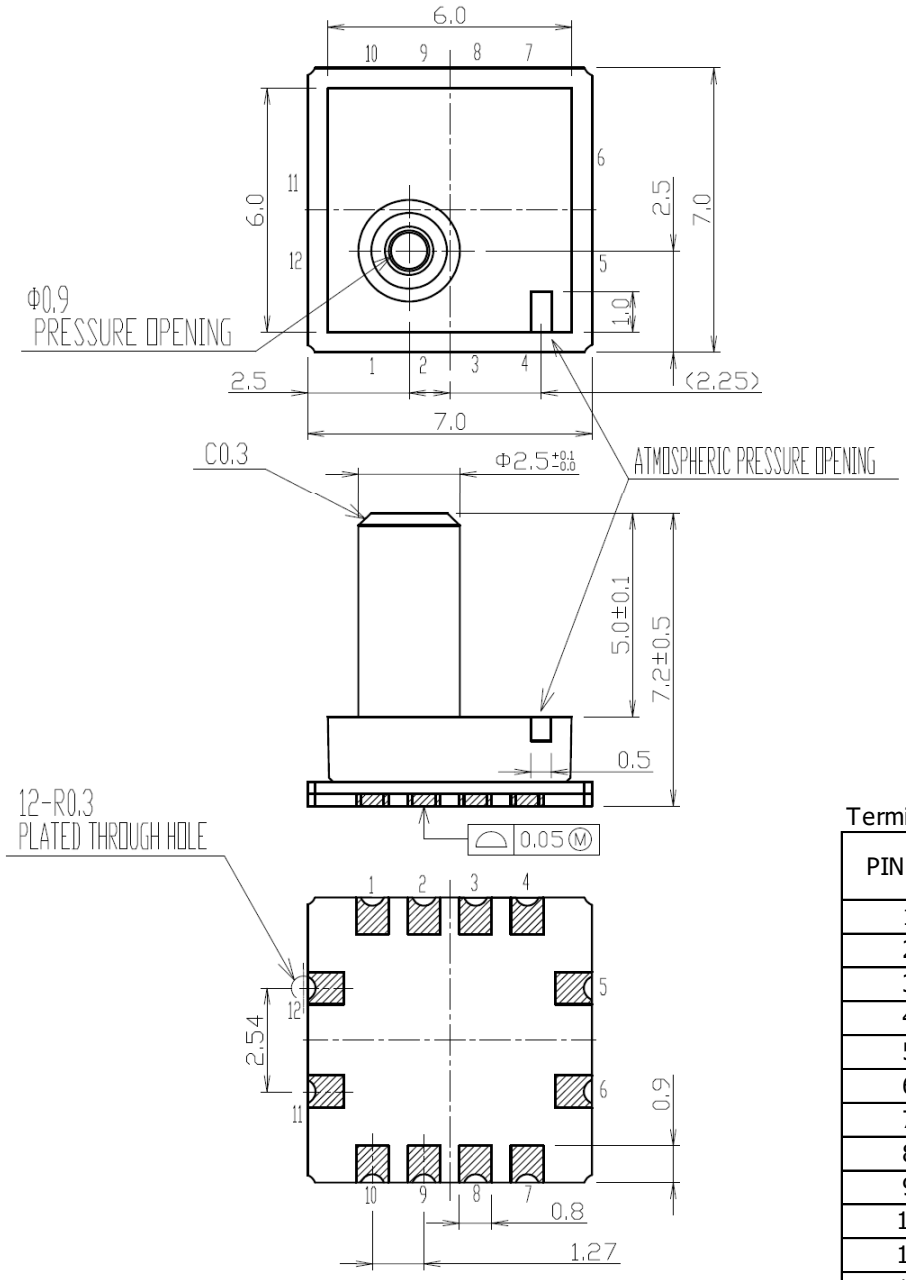

Terminal list

PIN No.	Name
1	VDD
2	NC
3	VDDIO
4	PSEL
5	GND
6	SCLK/SLC
7	CSB
8	SDO
9	SDI/SDA
10	DRDYB
11	NC
12	NC

Print circuit board specifications

Grade	BT Resin
UL	94V-0
Thickness	0.6±0.1
Structure	2Layers PCB with through holes
Parts assemble	One side
Resist	Both side

No. A01-MEMS12B-0002

©2024 Mitsumi Electric Co., Ltd. All rights reserved. The contents of this document are subject to change without notice. The details listed here are not a guarantee.

Downloaded from Arrow.com.

MARKING CONTENTS

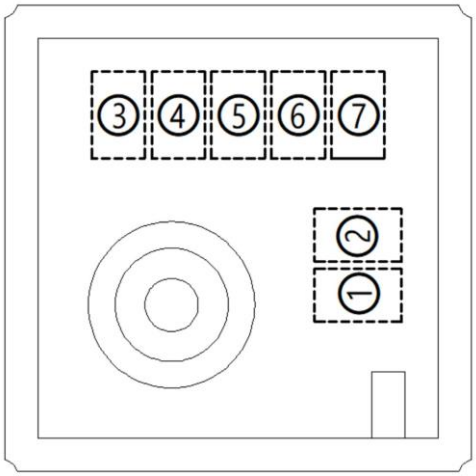

①	Model name		marking	
	MMR920		L	
②～④	Rank		marking	
	C02		C02	
	C04		C04	
	C07		C07	
	C10		C10	
⑤	Production year			
⑥	Production month			
	month	marking	month	marking
	JAN	1	JUL	7
	FEB	2	AUG	8
	MAR	3	SEP	9
	APR	4	OCT	J
	MAY	5	NOV	K
	JUN	6	DEC	L
⑦	Production day			
	day	marking	day	marking
	1	1	16	G
	2	2	17	H
	3	3	18	J
	4	4	19	K
	5	5	20	L
	6	6	21	M
	7	7	22	N
	8	8	23	P
	9	9	24	R
	10	A	25	S
	11	B	26	T
	12	C	27	U
	13	D	28	V
	14	E	29	W
	15	F	30	X
			31	Y

©2024 Mitsumi Electric Co., Ltd. All rights reserved. The contents of this document are subject to change without notice. The details listed here are not a guarantee.

Downloaded from Arrow.com.

PRODUCT NAME

MMR920□□□□□□

Taping material
- E：Emboss taping
- (When tray packing, it is blank)

Packing
- R：Taping(R Housing)
- BLANK：Tray

Package type
- A：MEMS-12B

Rank(Pressure range)
- C02：-20~+20cmH2O(-1.961~+1.961kPa)　Full scale 20cmH2O
- C04：-40~+40cmH2O(-3.922~+3.922kPa)　Full scale 40cmH2O
- C07：-70~+70cmH2O(-6.865~+6.865kPa)　Full scale 70cmH2O
- C10：-100~+100cmH2O(-9.805~+9.805kPa)　Full scale 100cmH2O

Model name
- MMR920：Micro pressure sensor

PRODUCT LINEUP

Product Name	Rank	Pressure Range	Packing	Status
MMR920C02A	C02	-20~20cmH2O(-1.961~1.961kPa)	Tray	Developing
MMR920C02ARE	C02	-20~20cmH2O(-1.961~1.961kPa)	Taping(R)	Developing
MMR920C04A	C04	-40~40cmH2O(-3.922~3.922kPa)	Tray	MP
MMR920C04ARE	C04	-40~40cmH2O(-3.922~3.922kPa)	Taping(R)	MP
MMR920C07A	C07	-70~70cmH2O(-6.865~6.865kPa)	Tray	Developing
MMR920C07ARE	C07	-70~70cmH2O(-6.865~6.865kPa)	Taping(R)	Developing
MMR920C10A	C10	-100~100cmH2O(-9.807~9.807kPa)	Tray	MP
MMR920C10ARE	C10	-100~100cmH2O(-9.807~9.807kPa)	Taping(R)	MP

©2024 Mitsumi Electric Co., Ltd. All rights reserved. The contents of this document are subject to change without notice. The details listed here are not a guarantee.

Downloaded from Arrow.com.

PRESSURE SENSOR LINEUP

Function	Product Name	Size [mm] (L x W x H)	Pressure Range [Pa]	Full Scale [Pa]	Pressure Measurement error [%FS]	Span Accuracy [%FS]	Effective Resolution [PaRMS]	Packing	Halogen	Status
Gage Pressure Sensor	MMR920C02A	7 x 7 x 7.2	-1,961 ~ 1,961	1,961	2.0	1.30	0.2	Tray	Contain	Developing
	MMR920C02ARE	7 x 7 x 7.2	-1,961 ~ 1,961	1,961	2.0	1.30	0.2	Taping (R)	Contain	Developing
	MMR920C04A	7 x 7 x 7.2	-3,922 ~ 3,922	3,922	1.0	0.65	0.2	Tray	Contain	MP
	MMR920C04ARE	7 x 7 x 7.2	-3,922 ~ 3,922	3,922	1.0	0.65	0.2	Taping (R)	Contain	MP
	MMR920C07A	7 x 7 x 7.2	-6,865 ~ 6,865	6,865	1.0	0.65	0.2	Tray	Contain	Developing
	MMR920C07ARE	7 x 7 x 7.2	-6,865 ~ 6,865	6,865	1.0	0.65	0.2	Taping (R)	Contain	Developing
	MMR920C10A	7 x 7 x 7.2	-9,807 ~ 9,807	9,807	1.0	0.65	0.2	Tray	Contain	MP
	MMR920C10ARE	7 x 7 x 7.2	-9,807 ~ 9,807	9,807	1.0	0.65	0.2	Taping (R)	Contain	MP
	MMR906XAN	6 x 5 x 7.2	-1,000 ~ 40,000	40,000	-	0.66	1.0	Tray	Free	MP
	MMR906XARE	6 x 5 x 7.2	-1,000 ~ 40,000	40,000	-	0.66	1.0	Taping (R)	Free	MP
	MMR902A34A	7 x 7 x 7.2	-1,000 ~ 40,000	40,000	2.3	0.66	0.7	Tray	Free	MP
	MMR902A34ABE	7 x 7 x 7.2	-1,000 ~ 40,000	40,000	2.3	0.66	0.7	Taping (B)	Free	MP
	MMR902A34ARE	7 x 7 x 7.2	-1,000 ~ 40,000	40,000	2.3	0.66	0.7	Taping (R)	Free	MP
Differential Pressure Sensor	MMR940C02A	29 x 18 x 14.25	-1,961 ~ 1,961	1,961	(2.0)	1.30	0.2	Tray	Contain	Planning
	MMR940C04A	29 x 18 x 14.25	-3,922 ~ 3,922	3,922	(1.0)	0.65	0.2	Tray	Contain	Developing
	MMR940C07A	29 x 18 x 14.25	-6,865 ~ 6,865	6,865	(1.0)	0.65	0.2	Tray	Contain	Planning
	MMR940C10A	29 x 18 x 14.25	-9,807 ~ 9,807	9,807	(1.0)	0.65	0.2	Tray	Contain	Planning

©2024 Mitsumi Electric Co., Ltd. All rights reserved. The contents of this document are subject to change without notice. The details listed here are not a guarantee.

Downloaded from Arrow.com.

NOTES

Safety Precautions

- Though Mitsumi Electric Co., Ltd. (hereinafter referred to as "Mitsumi") works continually to improve our product's quality and reliability, semiconductor products may generally malfunction or fail. Customers are responsible for complying with safety standards and for providing adequate designs and safeguards for their hardware, software and systems which minimize risk and avoid situations in which a malfunction or failure of this product could cause loss of human life, bodily injury, or damage to property, including data loss or corruption. Before customers use this product, create designs including this product, or incorporate this product into their own applications, customers must also refer to and comply with (a) the latest versions or all of our relevant information, including without limitation, product specifications, data sheets and application notes for this product and (b) the user's manual, handling instructions or all relevant information for any products which is to be used, or combined with this products. Customers are solely responsible for all aspects of their own product design or applications, including but not limited to (a) determining the appropriateness of the use of this product in such design or applications; (b) evaluating and determining the applicability of any information contained in this document, or in charts, diagrams, programs, algorithms, sample application circuits, or any other referenced documents; and (c) validating all operating parameters for such designs and applications. Mitsumi assumes no liability for customers' product design or applications.
- This product is intended for applying to computers, OA units, communication units, instrumentation units, machine tools, industrial robots, AV units, household electrical appliances, and other general electronic units.
- This product is not designed as a component of equipment or devices that require a high degree of reliability, may affect the life or body, or could damage the property (space systems, submarine repeaters, nuclear power controllers, infrastructure controllers, medical equipment, military devices, units related to the control and safety of transport equipment (automobiles, trains, aircraft, etc.), traffic signaling equipment, disaster / crime prevention units, or the like). In the case where this product is used in these applications, Mitsumi does not bear any responsibility. If the product is used as a component of the above equipment or devices, Mitsumi shall not be liable for any damage caused thereby. It is the customer's responsibility to carry out the necessary safety design for the customer's hardware, software and systems.
- Before using this product, even when it is not used for the applications written previous paragraph, notify and present us beforehand if special care and attention are needed for its application, intended purpose, environment of usage, risk, and the design or inspection specification corresponding to them.
- If any damage to our customer is objectively identified to be caused by the defect of this product, Mitsumi is responsible for it. In this case, Mitsumi is liable for the cost limited to the delivery price of this product.

Application considerations during actual circuit design

- The outline of parameters described herein has been chosen as an explanation of the standard parameters and performance of the product. When you actually plan to use the product, please ensure that the outside conditions are reflected in the actual circuit and assembling designs.
- Before using this product, please evaluate and confirm the actual application with this product mounted and embedded.
- To investigate the influence by applied transient load or external noise, It is necessary to evaluate and confirm them with mounting this product to the actual application.
- Any usage above the maximum rating may destroy this product or shorten the lifetime. Be sure to use this product under the maximum rating.
- If you continue to use this product highly-loaded (applying high temperature, large current or high voltage; or variation of temperature) even under the absolute maximum rating and even in the operating range, the reliability of this product may decrease significantly. Please design appropriate reliability in consideration of power dissipation and voltage corresponding to the temperature and designed lifetime after confirming our individual reliability documents (such as reliability test report or estimated failure rate). It is recommended that, before using this product, you appropriately derate the maximum power dissipation (typically, 80% or less of the maximum value) considering parameters including ambient temperature, input voltage, and output current.

Precautions for Foreign Exchange and Foreign Trade Control Act

- If you export or take products and technologies in this document which are subject to security trade control based on the Foreign Exchange and Foreign Trade Act to overseas from Japan, permission of the Japanese government is required.

©2024 Mitsumi Electric Co., Ltd. All rights reserved. The contents of this document are subject to change without notice. The details listed here are not a guarantee.

Downloaded from Arrow.com.

Prohibitions for Industrial Property Rights

- Since this document contains the contents related to our copyright and know-how, you are requested not to use this document for any purpose other than the application of this product.
- If a use of this product causes a dispute related to the industrial property rights of a third party, Mitsumi has no liability for any disputes except those which arise directly from the manufacturing and manufacturing method of our products.

Precautions for Product Liability Act

- Mitsumi does not bear any responsibility for any consequence resulting from any wrong or improper use of this product and other factors.

Others

- Any part of the contents contained herein must not be reprinted or reproduced without our prior permission.
- In case of any question arises out of the description in this specification, it shall be settled by the consultation between both parties promptly.

ATTENTION

- This product is designed and manufactured with the intention of normal use in general electronics. No special circumstance as described below is considered for the use of it when it is designed. With this reason, any use and storage under the circumstances below may affect the performance of this product. Prior confirmation of performance and reliability is requested to customers.
  - Environment with strong static electricity or electromagnetic wave
  - Environment with high temperature or high humidity where dew condensation may occur
- This product is not designed to withstand radioactivity, and must avoid using in a radioactive environment.

ADDTTIONAL NOTES

- The pressure medium which can use directly is only air. Customers are solely responsible for application of high humidity air include moisture, including but not limited to determining the appropriateness of the use of this product in such applications. Please do not use other media, especially corrosive gases (organic solvent gas, sulfurous acid gas, hydrogen sulfide gas, etc.) and media which include oil and foreign substance, since they could cause damages or malfunctions.
- Please handle it noting the foreign body mixing with the pressure opening and atmospheric pressure opening after opening packing.
- When cut folding the PCB after mounting this product, take measures to prevent stress to the package. Also, when you insert the tube in this product, please note that plugging it vertically. Load in the lateral direction of the cover of the nozzle is up to 1kg or less. (Load condition: position of height 4mm from the marking surface.) Excessive load could cause damages of cover, or air leak by peeling from the interface of the cover and the substrate, or malfunctions.
- The light that enters from the pressure entrance reaches the semiconductor chip. Please avoid use in the environment that light enters into the pressure entrance directly, because the semiconductor chip might malfunction because of light.

©2024 Mitsumi Electric Co., Ltd. All rights reserved. The contents of this document are subject to change without notice. The details listed here are not a guarantee.

Downloaded from Arrow.com.

PACKING SPECIFICATIONS (TRAY)

QUANTITY

- VACUUM PACKING 700 pcs / SHIELD BAG
- BOX PACKING MAX 5,600 pcs / BOX (8BAGS)

THE QUANTITY IS FILLED IN THE PACKING SLIP

PACKING SPECIFICATIONS

- TRAY STORAGE SPECIFICATION

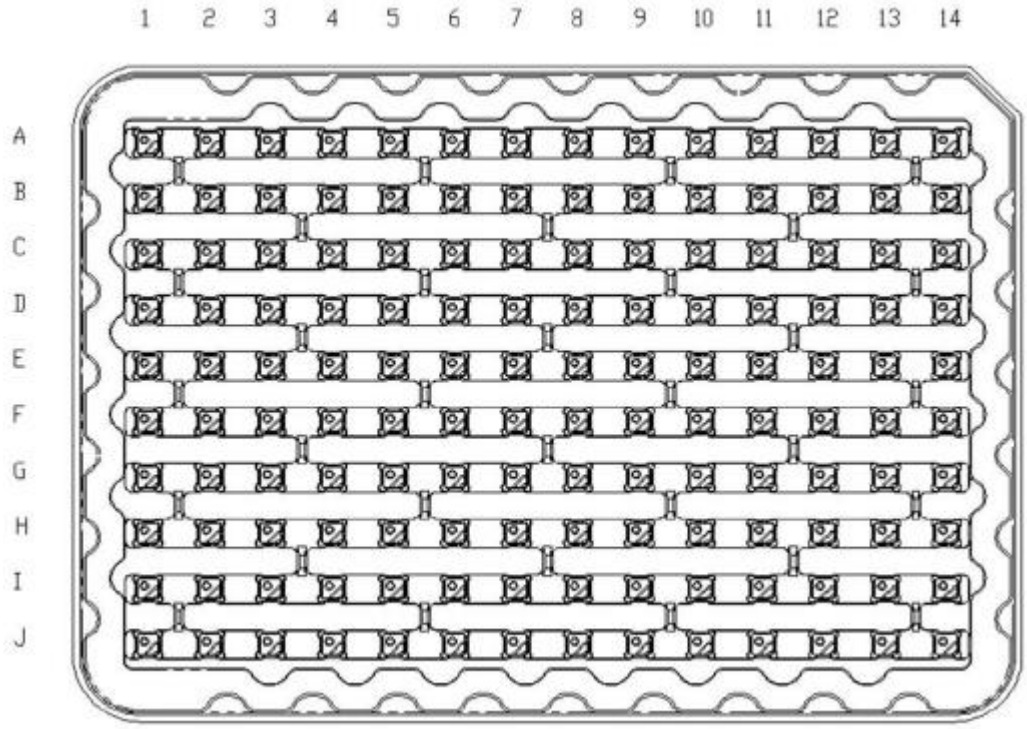

1. PRODUCTION STORAGE DIRECTION

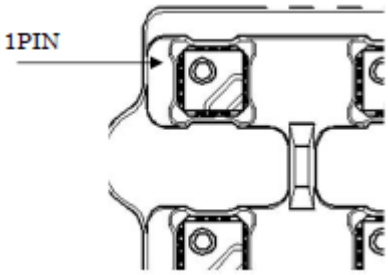

2. BROKEN NUMBER PRODUCTION STORAGE

REGARDING BROKEN NUMBER PRODUCTION STORAGE ,
IT IS HOUSED IN FOLLOWING-ORDER.
(A1、B1、…、I1、J1)、(A2、B2、…、I2、J2)、…、(A14、B14、…、I14、J14)

3. TRAY MATERIAL, DISPOSED ELECTRICATION PREVENTION.

©2024 Mitsumi Electric Co., Ltd. All rights reserved. The contents of this document are subject to change without notice. The details listed here are not a guarantee.

Downloaded from Arrow.com.

· TRAY DIMENSION

TRAY A

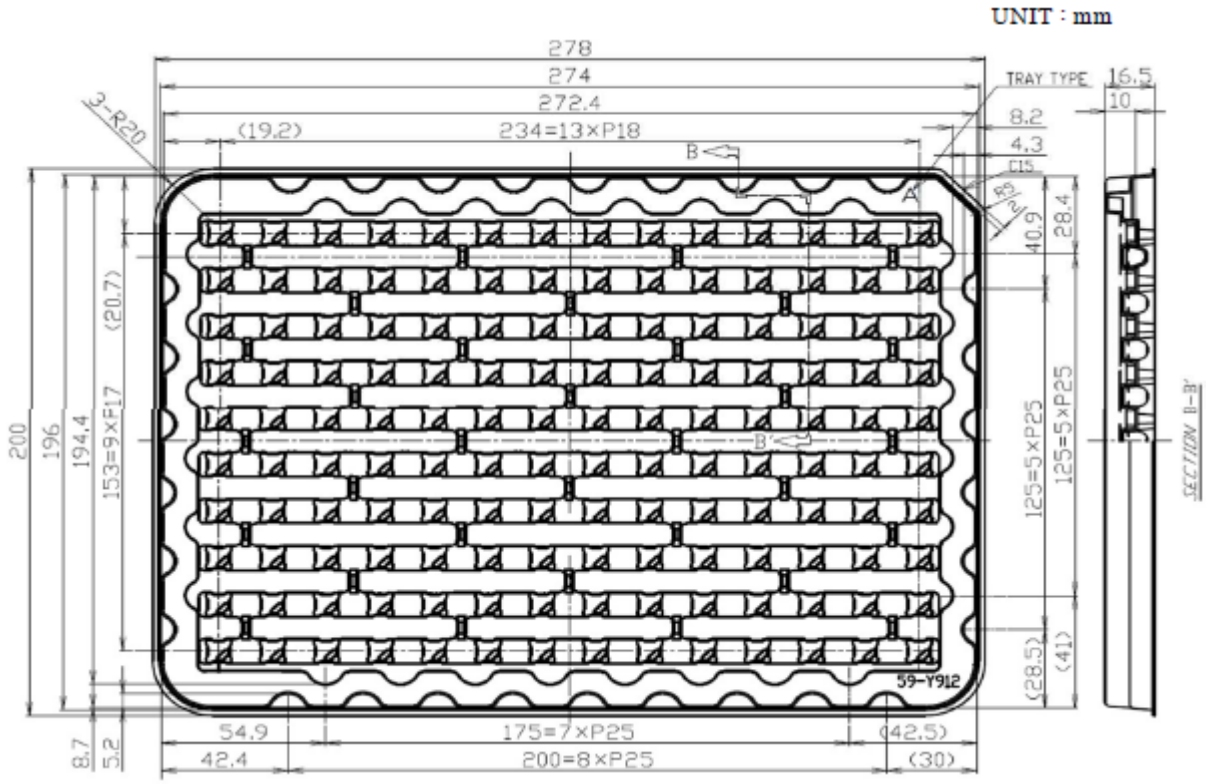

TRAY B

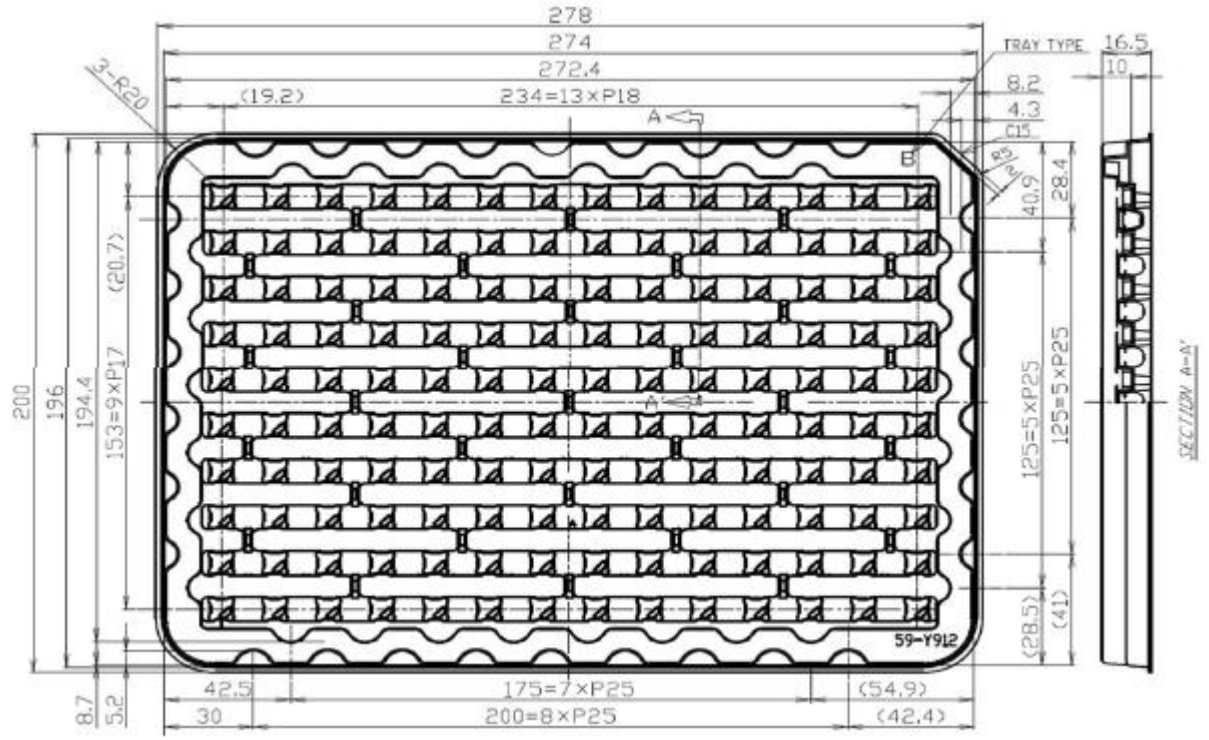

©2024 Mitsumi Electric Co., Ltd. All rights reserved. The contents of this document are subject to change without notice. The details listed here are not a guarantee.

Downloaded from Arrow.com.

・ PACKING SPECIFICATION

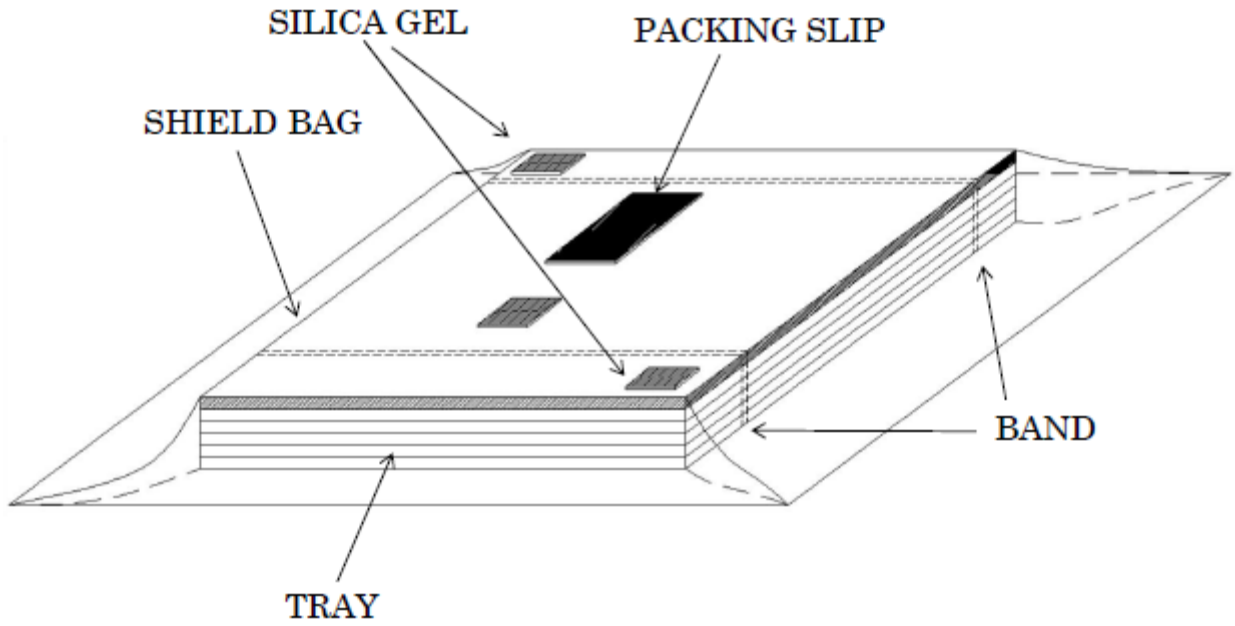

THESE 6 TRAYS WHICH ARE 5 TRAYS WITH PRODUCTS AND EMPTY TRAY
AS LID ARE PILED UP. ALSO, THESE TRAYS ARE FIXED BY BAND.
THESE ARE VACUUM-HEAT-SEALED TOGETHER WITH THE SILICA GEL.
※THIS TRAY HAS TYPE A AND TYPE B. THEY ARE PILED UP ALTERNATELY.
(IT IS POSSIBLE TO USE BOTH TYPE TRAYS AS EMPTY ONE.)

©2024 Mitsumi Electric Co., Ltd. All rights reserved. The contents of this document are subject to change without notice. The details listed here are not a guarantee.

Downloaded from Arrow.com.

· BOX DIMENSION

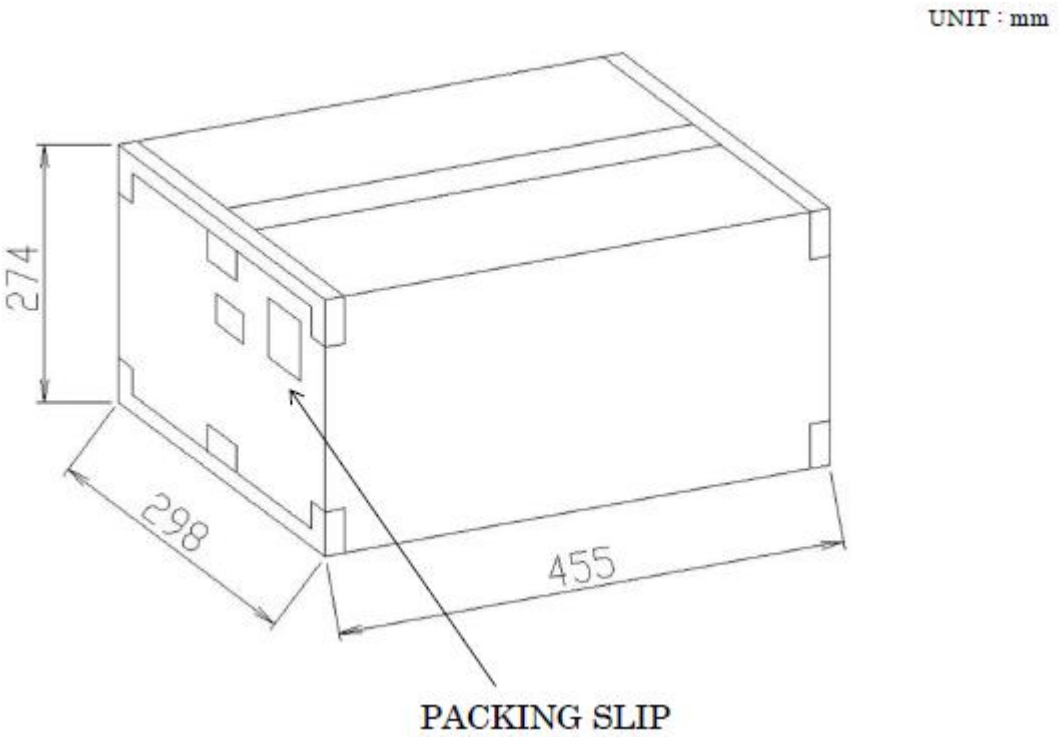

PUT MAX 8 BAGS IN THE CARTON BOX.
AFTER PACKING BY TAPE (5,600 PCS MAX)
PUT THE PACKING SLIP ON THE SIDE OF THE CARTON BOX.

©2024 Mitsumi Electric Co., Ltd. All rights reserved. The contents of this document are subject to change without notice. The details listed here are not a guarantee.

Downloaded from Arrow.com.

・ PACKING SLIP SPECIFICATION

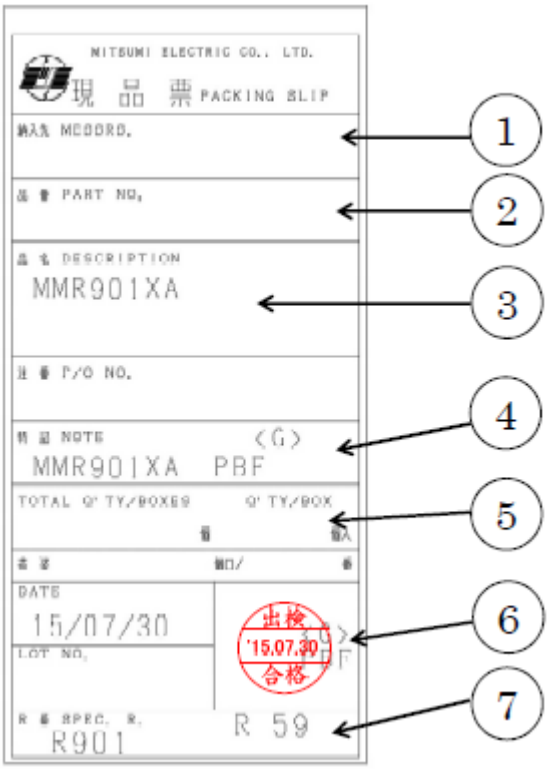

① CUSTOMER NAME
② CUSTOMER'S MODEL NAME
③ MITSUMI MODEL NAME
④ "G mark" meaning is RoHS-compliant.
⑤ PACKING Q'TY (PACK/CARTON)
⑥ QC STAMP(SHIPMENT DATE)
※This is pass-stamp about shipment inspection.
⑦ MITSUMI DRAWING NUMBER

MARK LOT NUMBER

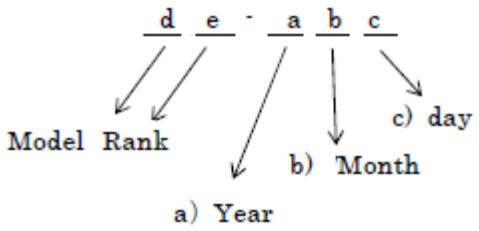

a)	Production year			
b)	Production month			
	month	marking	month	marking
	JAN	1	JUL	7
	FEB	2	AUG	8
	MAR	3	SEP	9
	APR	4	OCT	J
	MAY	5	NOV	K
	JUN	6	DEC	L
c)	Production day			
	day	marking	day	marking
	1	1	16	G
	2	2	17	H
	3	3	18	J
	4	4	19	K
	5	5	20	L
	6	6	21	M
	7	7	22	N
	8	8	23	P
	9	9	24	R
	10	A	25	S
	11	B	26	T
	12	C	27	U
	13	D	28	V
	14	E	29	W
	15	F	30	X
			31	Y

©2024 Mitsumi Electric Co., Ltd. All rights reserved. The contents of this document are subject to change without notice. The details listed here are not a guarantee.

Downloaded from Arrow.com.

PACKING SPECIFICATIONS (TAPING, R HOUSING)

QUANTITY

- REEK PACKING 700 pcs / REEL
- BOX PACKING MAX 700 pcs / BOX (1REEL)

THE QUANTITY IS FILLED IN THE PACKING SLIP

PACKING SPECIFICATIONS

- HOUSING SPECIFICATION

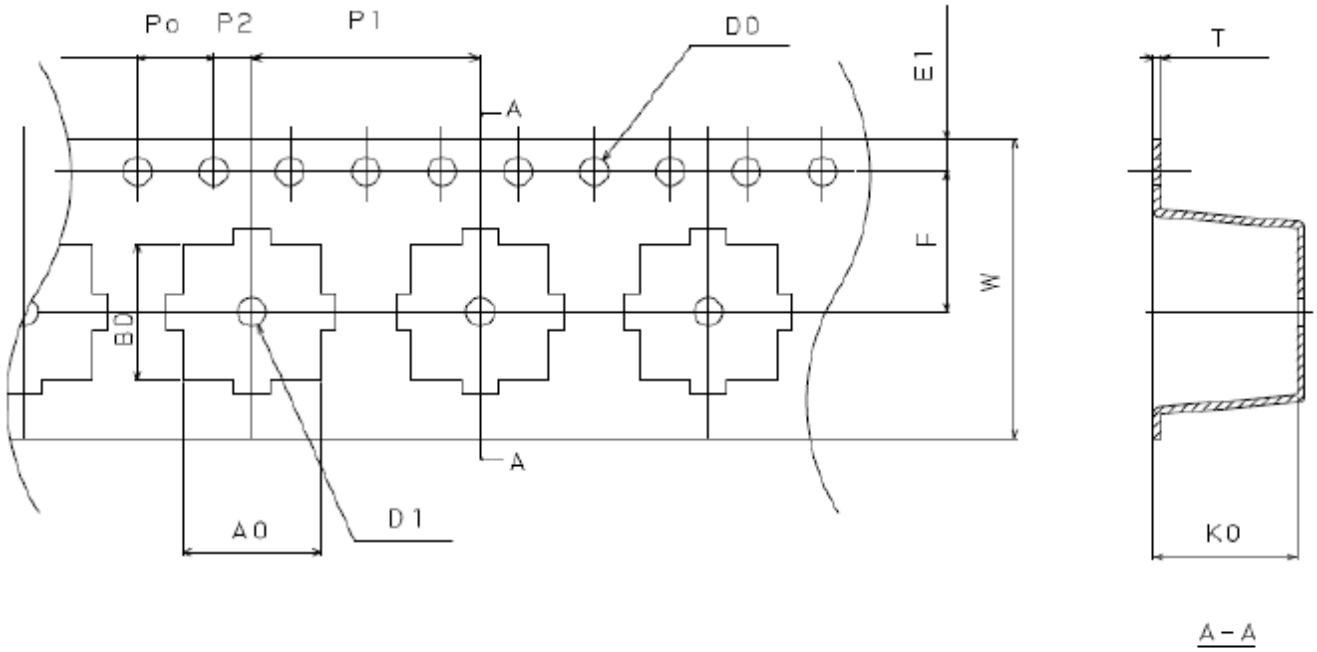

SYM.	A0	B0	W	F	E1	P1	P2	P0	φD0	T	K0	φD1
UNIT	7.3	7.3	16.0	7.5	1.75	12.0	2.0	4.0	1.5	0.4	7.5	1.5
mm	±0.1	±0.1	+0.3 −0.1	±0.1	±0.1	±0.1	±0.1	±0.1	+0.1 −0.0	±0.05	±0.1	±0.1

©2024 Mitsumi Electric Co., Ltd. All rights reserved. The contents of this document are subject to change without notice. The details listed here are not a guarantee.

Downloaded from Arrow.com.

1. PRODUCTION STORAGE DIRECTION

R HOUSING

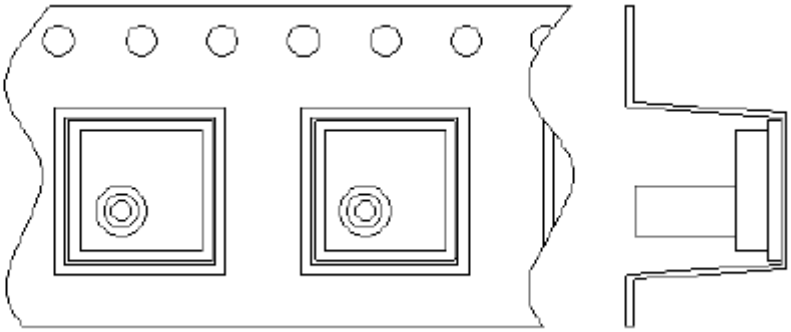

2. CARRIER TAPE MATERIAL : DISPOSED ELECTRICATION PREVENTION.

3. THE LENGTH OF LEADER TAPE : MORE THAN 100 mm INCLUDING 9 OR MORE EMBOSSES IN WHICH NO COMPONENT IS PLACED.

4. THE LENGTH OF TRAILER TAPE : MORE THAN 160 mm INCLUDING EMBOSSES IN WHICH NO COMPONENT IS PLACED.

©2024 Mitsumi Electric Co., Ltd. All rights reserved. The contents of this document are subject to change without notice. The details listed here are not a guarantee.

Downloaded from Arrow.com.

・ REEL DIMENSION

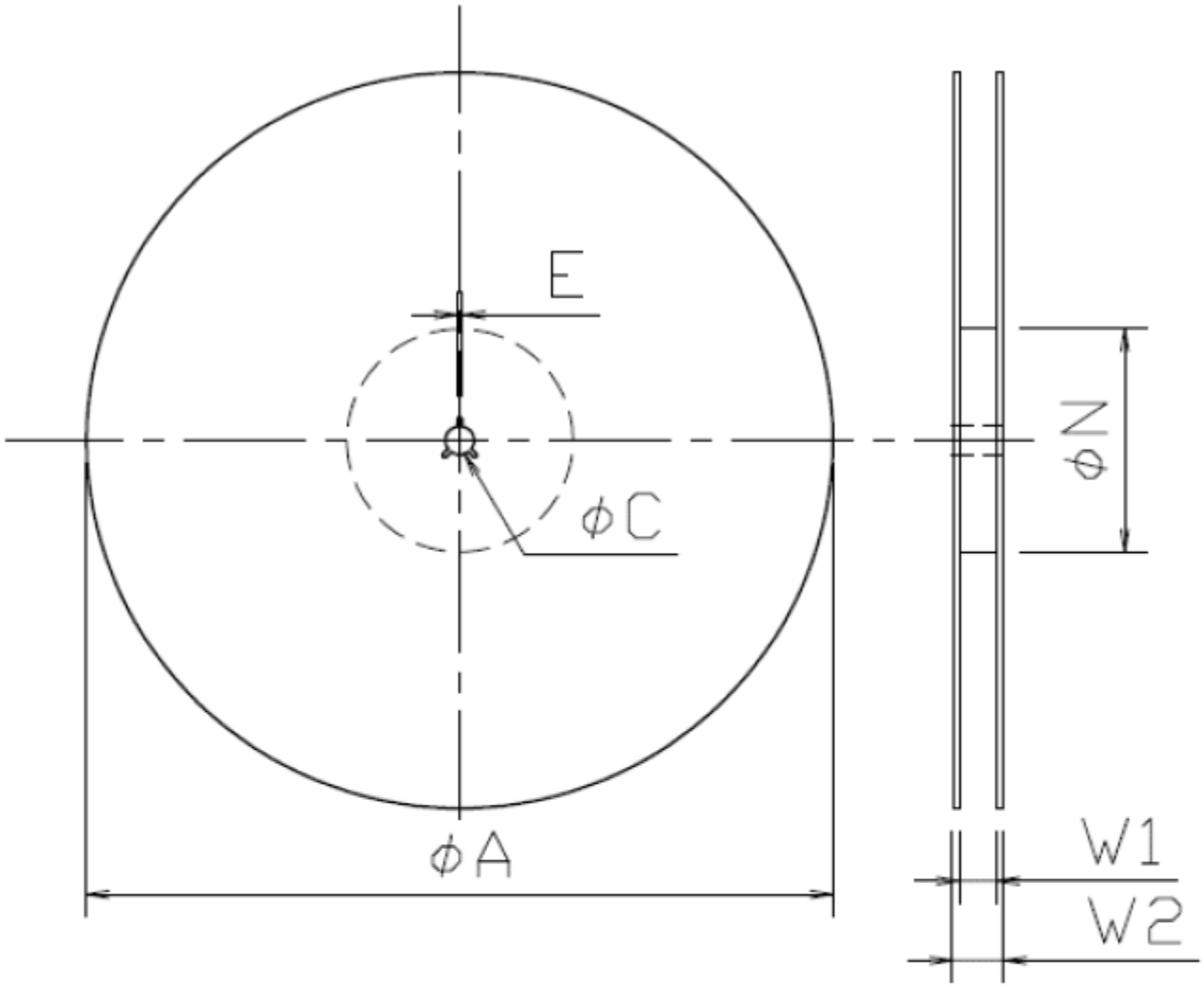

記号 SYM.	φA	φC	φN	E	W1	W2
UNIT mm	330	13.0	100	2.0	17.4	21.4
	±2.0	±0.2	±1.0	±0.5	±1.0	±1.0

©2024 Mitsumi Electric Co., Ltd. All rights reserved. The contents of this document are subject to change without notice. The details listed here are not a guarantee.

Downloaded from Arrow.com.

・ MOISTURE PROOF PACKING

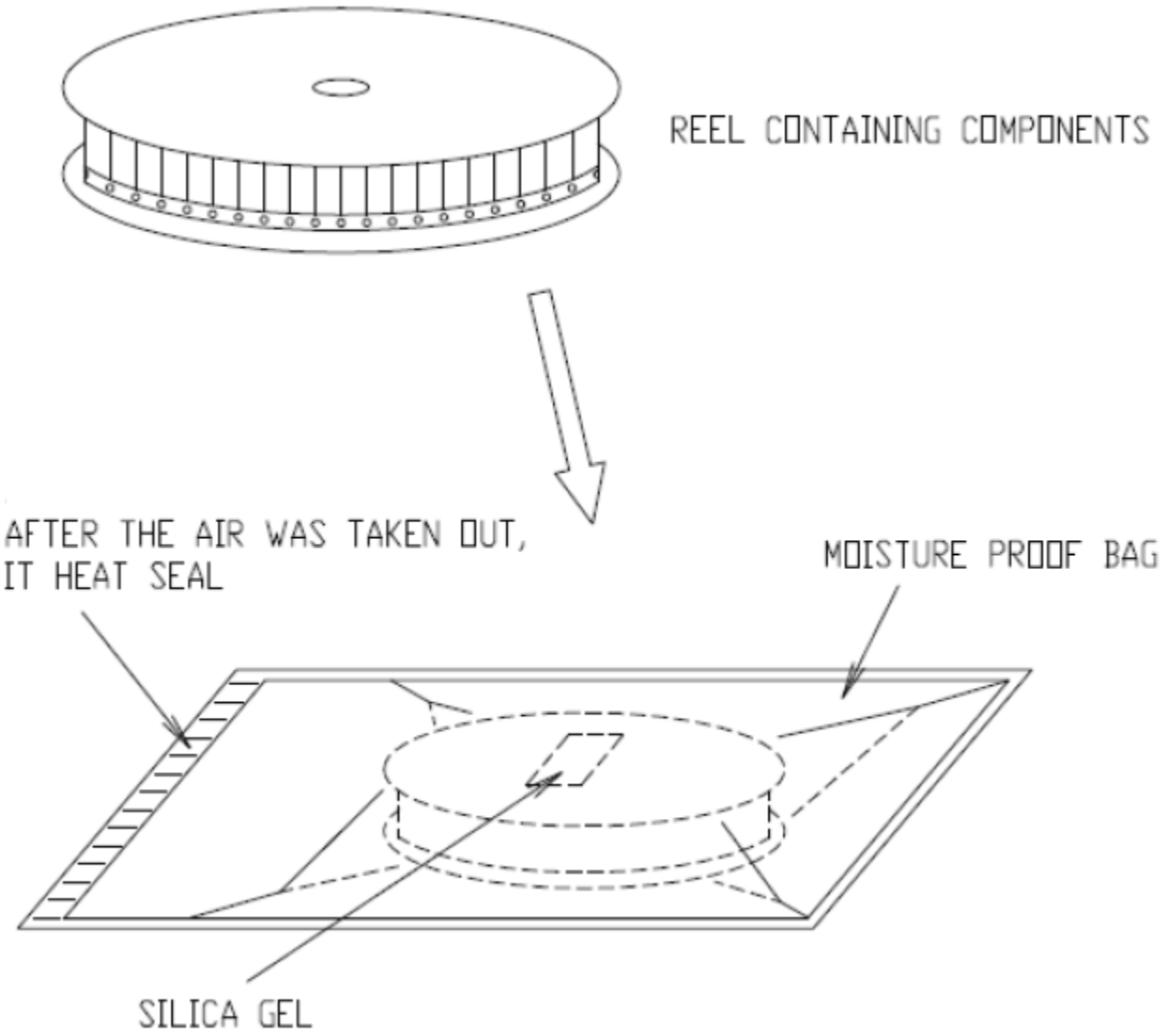

©2024 Mitsumi Electric Co., Ltd. All rights reserved. The contents of this document are subject to change without notice. The details listed here are not a guarantee.

Downloaded from Arrow.com.

・ BOX DIMENSION

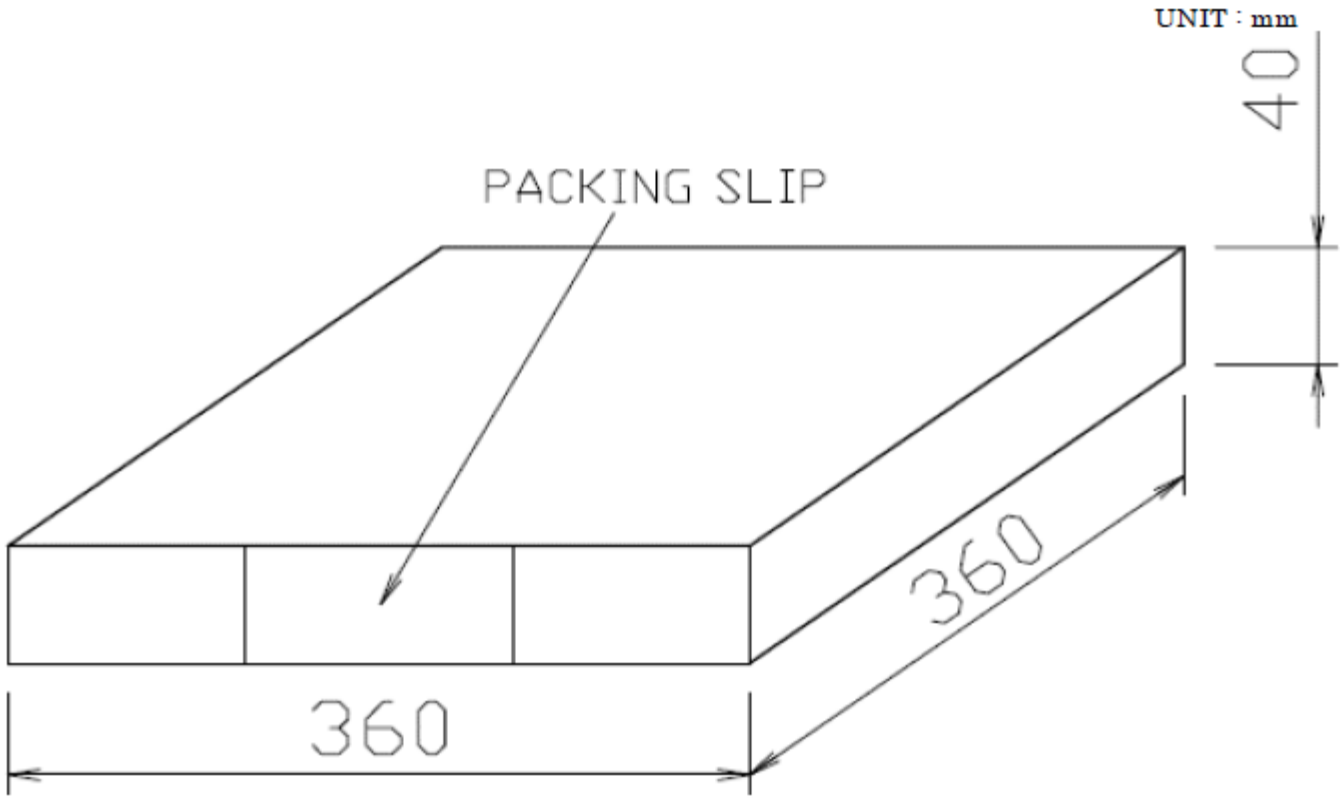

©2024 Mitsumi Electric Co., Ltd. All rights reserved. The contents of this document are subject to change without notice. The details listed here are not a guarantee.

Downloaded from Arrow.com.

・ PACKING SLIP SPECIFICATION

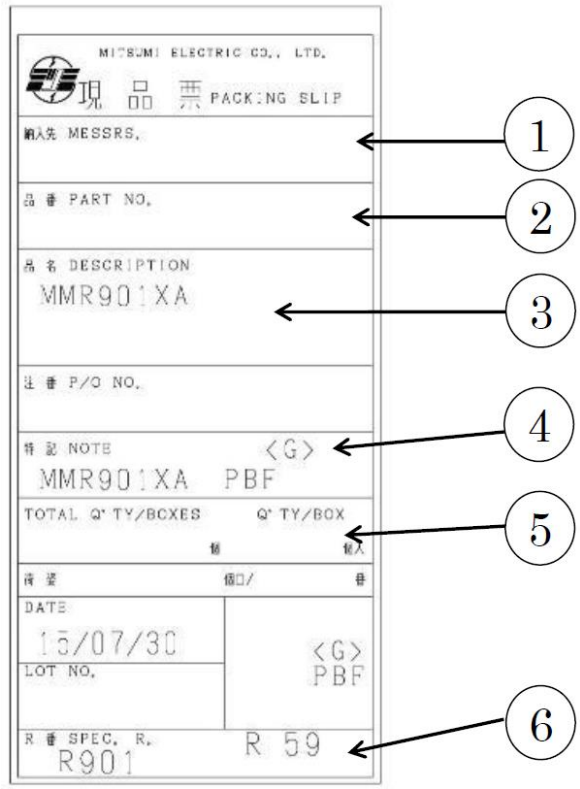

① CUSTOMER NAME
② CUSTOMER'S MODEL NAME
③ MITSUMI MODEL NAME
④ "G mark" meaning is RoHS-compliant.
⑤ PACKING Q'TY (PACK/CARTON)
⑥ MITSUMI DRAWING NUMBER

MARK LOT NUMBER

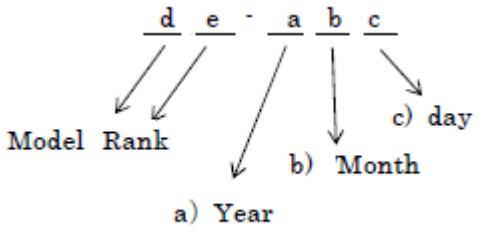

a)	Production year			
b)	Production month			
	month	marking	month	marking
	JAN	1	JUL	7
	FEB	2	AUG	8
	MAR	3	SEP	9
	APR	4	OCT	J
	MAY	5	NOV	K
	JUN	6	DEC	L
c)	Production day			
	day	marking	day	marking
	1	1	16	G
	2	2	17	H
	3	3	18	J
	4	4	19	K
	5	5	20	L
	6	6	21	M
	7	7	22	N
	8	8	23	P
	9	9	24	R
	10	A	25	S
	11	B	26	T
	12	C	27	U
	13	D	28	V
	14	E	29	W
	15	F	30	X
			31	Y

©2024 Mitsumi Electric Co., Ltd. All rights reserved. The contents of this document are subject to change without notice. The details listed here are not a guarantee.

Downloaded from Arrow.com.

CONDITION FOR PACKAGE MOUNTING

Design example of mount pad

The dimension is for reference only and not guaranteed by design.

UNIT	mm

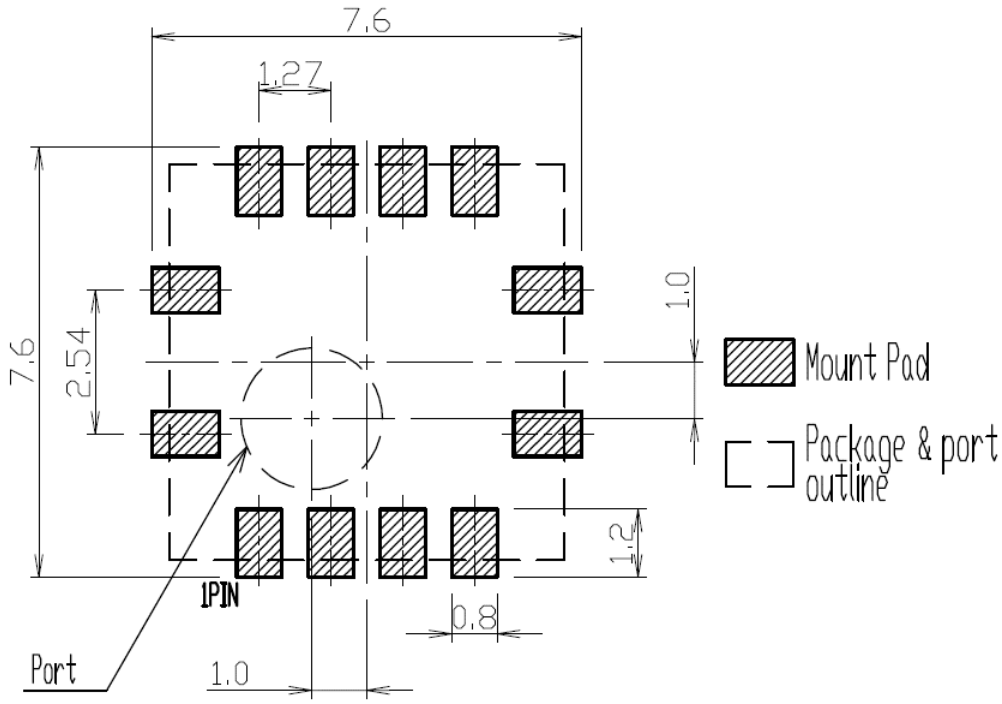

The dimension is for reference only and not guaranteed by design.

To design practically, correction should be made for optimized dimensions considering the effects of the board type to be mounted, mount (soldering) method, type and coating thickness of cream solder.

©2024 Mitsumi Electric Co., Ltd. All rights reserved. The contents of this document are subject to change without notice. The details listed here are not a guarantee.

Downloaded from Arrow.com.

Pb-Free recommended profile condition

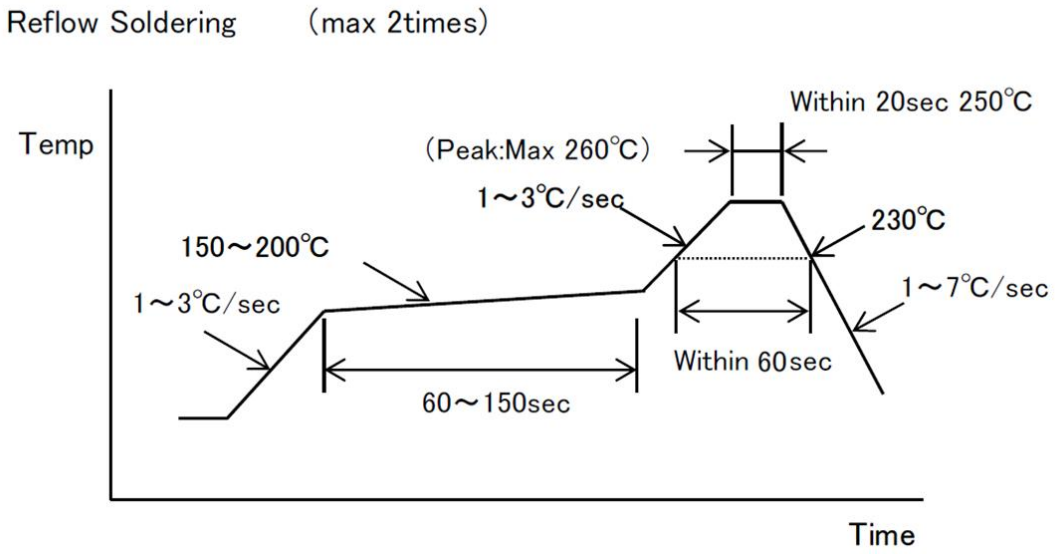

This profile gives recommended values, which are not guaranteed.
For mounting the package, evaluate the profile with the equipment, conditions, and materials to be used.

Mounting by flow soldering
Flow soldering cannot be used for mounting of this package.

Mounting by manual soldering
Manual soldering cannot be used for mounting of this package.

In the case of cleaning, please use cotton swab, and also please keep soldering-solution from entering into the pressure and atmospheric pressure opening. Please do not use ultrasonic cleaning (dipping).

Cleaning method

Cleaning solution	Isopropyl alcohol
Solvent temperature	Max 45℃
Cleaning time	Within 3 min

Note
When insert a tube to this package, please keep direction of a tube at right angle with this package.
Also, after mounting by reflow, please make sure not to insert a tube to package before finish cooling.
If place an extra strain on cover nozzle, it is possible that occur cover nozzle broken, interface delamination between cover nozzle and printed wiring board. It has the potential to become air-leak problem.

©2024 Mitsumi Electric Co., Ltd. All rights reserved. The contents of this document are subject to change without notice. The details listed here are not a guarantee.

Downloaded from Arrow.com.

Storage method

Storage condition
Store the device under the following conditions.

Temperature: 5~30°C
Humidity: 40~70%RH
Storage life: 1year

For the product in the moisture-proof packaging, follow these conditions after unpacking.

Temperature: 5~30°C
Humidity: 40~70%RH
Storage life: 168hours

Do not store this device where a large amount of dust or harmful volatile gas exists, electrostatic is easily charged, condensation is generated, or changes in temperature and humidity are wide, or under the direct sunlight.

Baking
If the storage time specified above has passed, mounting by soldering may cause cracks on the moisture absorbed package. Before mounting, the package should be baked under the following conditions.

Temperature: 125°C
Treating time: 16 to 24 hours

Trays, embossing tapes and reels are not heat-resistant type.
Before baking, the device should be placed in a heat-resistant container.
In consideration of the time-consuming baking process and the possibility of deformed terminal, the device should be mounted promptly within the time observing the storage conditions.
If a long-term storage is needed, a desiccator or a dry box should be used.

©2024 Mitsumi Electric Co., Ltd. All rights reserved. The contents of this document are subject to change without notice. The details listed here are not a guarantee.

Downloaded from Arrow.com.

Handling instructions

Shipping boxes must be handled with care because any drop or shock may damage the device.
Additionally, the device must be handled in the place with the protection against electrostatic charge and without extreme changes of temperature/humidity.

This device is a piezoresistive pressure sensor. Due to its sensing principle, the output value of a piezoresistive pressure sensor is affected by thermal stress fluctuations. Therefore, after reflow soldering, the offset value of this device shifts. And the shift amount decreases gradually over time. (See the Fig. below.) Please evaluate and confirm the offset shift after reflow soldering.

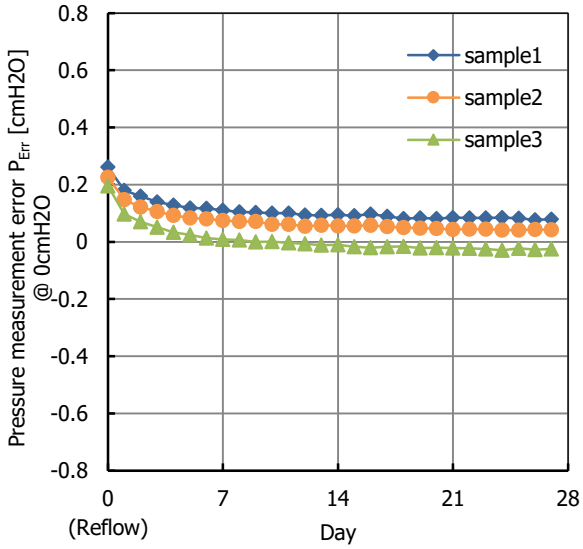

Fig. Offset Shift and Relaxation after Reflow Soldering

©2024 Mitsumi Electric Co., Ltd. All rights reserved. The contents of this document are subject to change without notice. The details listed here are not a guarantee.

Downloaded from Arrow.com.

MITSUMI ELECTRIC CO., LTD.
Strategy Engineering Department Semiconductor Business Division
Tel: +81-46-230-3470 / https://product.minebeamitsumi.com/en/contact/

Notes:
Any products mentioned this datasheet are subject to any modification in their appearance and others for improvements without prior notification. The details listed here are not a guarantee of the individual products at the time of ordering. When using the products, you will be asked to check their specifications

©2024 Mitsumi Electric Co., Ltd. All rights reserved. The contents of this document are subject to change without notice. The details listed here are not a guarantee.

Downloaded from Arrow.com.

Disclaimers (Handling Precautions)

1. All the information described herein (product data, specifications, figures, tables, programs, algorithms and application circuit examples, etc.) is current as of publishing date of this document and is subject to change without notice.
2. The circuit examples and the usages described herein are for reference only, and do not guarantee the success of any specific mass-production design.
   MITSUMI ELECTRIC CO., LTD. is not liable for any losses, damages, claims or demands caused by the reasons other than the products described herein (hereinafter "the products") or infringement of third-party intellectual property right and any other right due to the use of the information described herein.
3. MITSUMI ELECTRIC CO., LTD. is not liable for any losses, damages, claims or demands caused by the incorrect information described herein.
4. Be careful to use the products within their ranges described herein. Pay special attention for use to the absolute maximum ratings, operation voltage range and electrical characteristics, etc.
   MITSUMI ELECTRIC CO., LTD. is not liable for any losses, damages, claims or demands caused by failures and / or accidents, etc. due to the use of the products outside their specified ranges.
5. Before using the products, confirm their applications, and the laws and regulations of the region or country where they are used and verify suitability, safety and other factors for the intended use.
6. When exporting the products, comply with the Foreign Exchange and Foreign Trade Act and all other export-related laws, and follow the required procedures.
7. The products are strictly prohibited from using, providing or exporting for the purposes of the development of weapons of mass destruction or military use. MITSUMI ELECTRIC CO., LTD. is not liable for any losses, damages, claims or demands caused by any provision or export to the person or entity who intends to develop, manufacture, use or store nuclear, biological or chemical weapons or missiles, or use any other military purposes.
8. The products are not designed to be used as part of any device or equipment that may affect the human body, human life, or assets (such as medical equipment, disaster prevention systems, security systems, combustion control systems, infrastructure control systems, vehicle equipment, traffic systems, in-vehicle equipment, aviation equipment, aerospace equipment, and nuclear-related equipment), excluding when specified for in-vehicle use or other uses by MITSUMI ELECTRIC CO., LTD. Do not apply the products to the above listed devices and equipment.
   MITSUMI ELECTRIC CO., LTD. is not liable for any losses, damages, claims or demands caused by unauthorized or unspecified use of the products.
9. In general, semiconductor products may fail or malfunction with some probability. The user of the products should therefore take responsibility to give thorough consideration to safety design including redundancy, fire spread prevention measures, and malfunction prevention to prevent accidents causing injury or death, fires and social damage, etc. that may ensue from the products' failure or malfunction.
   The entire system in which the products are used must be sufficiently evaluated and judged whether the products are allowed to apply for the system on customer's own responsibility.
10. The products are not designed to be radiation-proof. The necessary radiation measures should be taken in the product design by the customer depending on the intended use.
11. The products do not affect human health under normal use. However, they contain chemical substances and heavy metals and should therefore not be put in the mouth. The fracture surfaces of wafers and chips may be sharp. Be careful when handling these with the bare hands to prevent injuries, etc.
12. When disposing of the products, comply with the laws and ordinances of the country or region where they are used.
13. The information described herein contains copyright information and know-how of MITSUMI ELECTRIC CO., LTD. The information described herein does not convey any license under any intellectual property rights or any other rights belonging to MITSUMI ELECTRIC CO., LTD. or a third party. Reproduction or copying of the information from this document or any part of this document described herein for the purpose of disclosing it to a third-party is strictly prohibited without the express permission of MITSUMI ELECTRIC CO., LTD.
14. For more details on the information described herein or any other questions, please contact MITSUMI ELECTRIC CO., LTD.'s sales representative.
15. This Disclaimers have been delivered in a text using the Japanese language, which text, despite any translations into the English language and the Chinese language, shall be controlling.

Downloaded from Arrow.com.