MHz Range Crystal unit FA-128

SEIKO EPSON CORPORATION

Product name FA-128 32.000000 MHz 12.0 +10.0-10.0

Product Number / Ordering code Q22FA12800018xx

Please refer to the 5.Packing information about xx (last 2 digits)

Pb free / Complies with EU RoHS directive

Reference weight Typ. 7 mg

1.Absolute maximum ratings

Parameter	Symbol	Min.	Typ.	Max.	Unit	Conditions / Remarks
Storage temperature	T_stg	-40	-	+125	ºC	Storage as single product
Operating temperature	T_use	-40	-	+105	ºC	

2.Specifications(characteristics)

Parameter	Symbol	Min.	Typ.	Max.	Unit	Conditions / Remarks
Nominal frequency	f_nom	—	32.000000	—	MHz	Fundamental
Frequency tolerance	f_tol	-10	-	+10	x 10^{-6}	@+25ºC
Frequency Stability over temperature	f_tem	-10	-	+10	x 10^{-6}	-20ºC to +75ºC
Operating temperature	T_use	-20	-	+75	ºC	
Level of drive	DL	10	-	100	µW	
Load capacitance	CL	—	12	—	pF	
Motional resistance (ESR)	R1	-	-	60	Ω	
Motional capacitance	C1	-	2.48	-	fF	
Motional inductance	L1	-	9.97	-	mH	
Shunt capacitance	C0	-	0.70	-	pF	
Frequency aging	f_age	-1	—	+1	x10^{-6} /yea	@+25ºC, First year

3.External dimensions (Unit: mm)

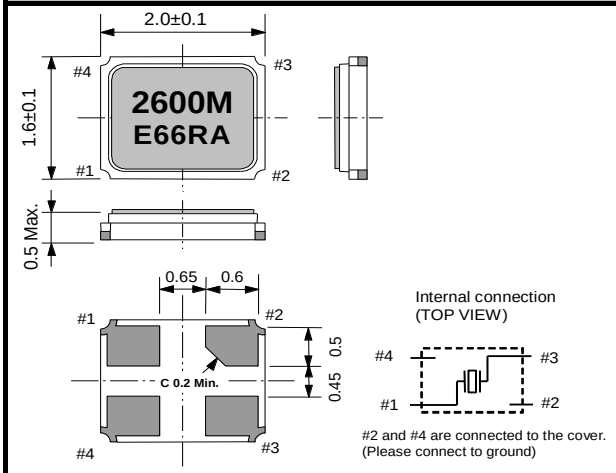

4.Footprint(Recommended) (Unit: mm)

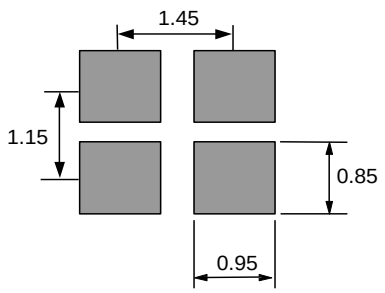

5.Packing information

[1]Product number last 2 digits code (xx) description The recommended code is "18"

Q22FA12800018xx

Code	Condition	Code	Condition
01	Any Q'ty vinyl bag(Tape cut)	00	3000pcs / Reel
11	Any Q'ty / Reel	18	5000pcs / Reel
12	250pcs / Reel		
14	1000pcs / Reel		

Downloaded from Arrow.com.

[2] Taping specification

Subject to EIA-481 & IEC-60286

(1) Tape dimensions TE0804L

Material of the Carrier Tape : PS

Material of the Top Tape : PET+PE

Unit: mm

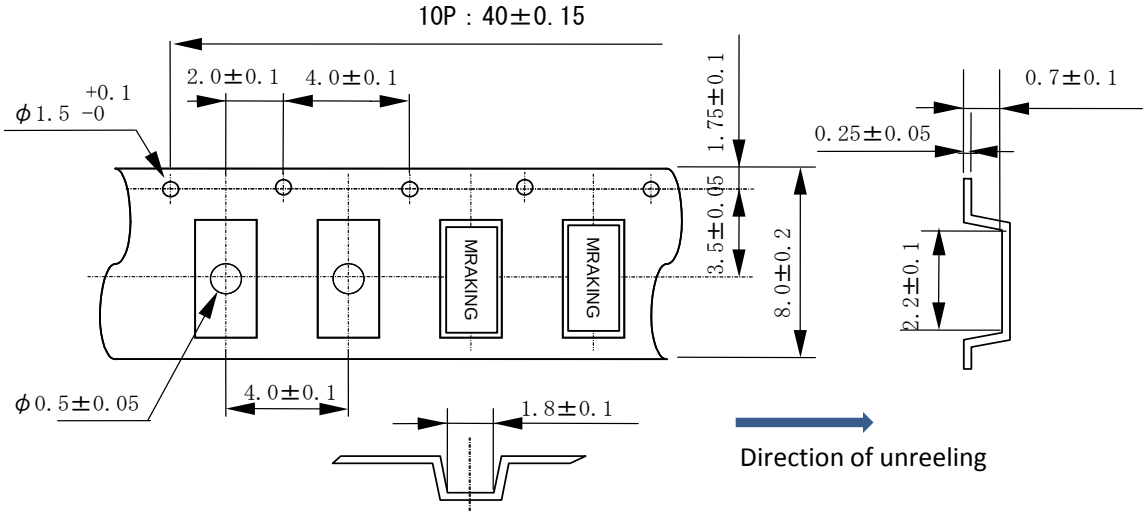

(2) Reel dimensions

Center material : PS

Material of the Reel : PS

Unit: mm

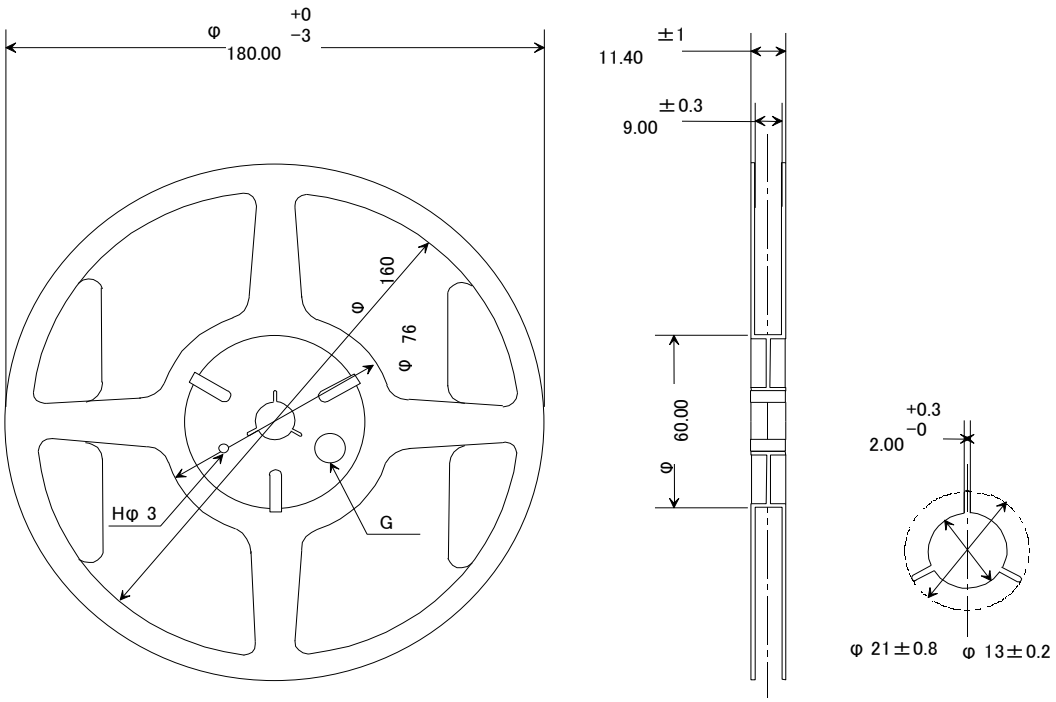

Downloaded from Arrow.com.

6.Reflow profile

Reflow condition (Follow of JEDEC STD-020D.01)

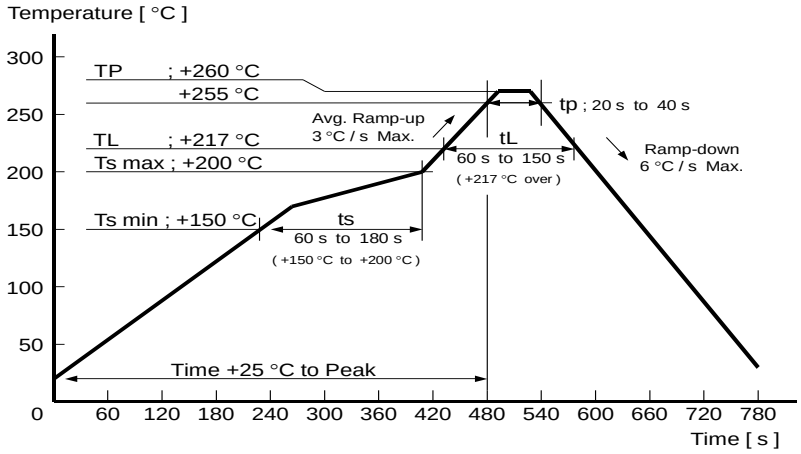

7.Notice

- This material is subject to change without notice.
- Any part of this material may not be reproduced or duplicated in any form or any means without the written permission of Seiko Epson.
- The information about applied data,circuitry, software, usage, etc. written in this material is intended for reference only.
  Seiko Epson does not assume any liability for the occurrence of customer damage or infringing on any patent or copyright of a third party.
  This material does not authorize the licensing for any patent or intellectual copyrights.
- When exporting the products or technology described in this material, you should comply with the applicable export control laws and regulations and follow the procedures required by such laws and regulations.
- You are requested not to use the products (and any technical information furnished, if any) for the development and/or manufacture of weapon of mass destruction or for other military purposes. You are also requested that you
  would not make the products available to any third party who may use the products for such prohibited purposes.
- These products are intended for general use in electronic equipment. When using them in specific applications that require
  extremely high reliability, such as the applications stated below, you must obtain permission from Seiko Epson in advance.
  / Space equipment (artificial satellites, rockets, etc.)
  / Transportation vehicles and related (automobiles, aircraft, trains, vessels, etc.)
  / Medical instruments to sustain life
  / Submarine transmitters
  / Power stations and related
  / Fire work equipment and security equipment
  / Traffic control equipment
  / And others requiring equivalent reliability.

- All brands or product names mentioned herein are trademarks and/or registered trademarks of their respective.

Contact us

http://www5.epsondevice.com/en/contact/

Downloaded from Arrow.com.