EEPROM Serial 32-Kb I²C

CAT24C32



SOIC-8
W SUFFIX
CASE 751BD



UDFN8
HU4 SUFFIX
CASE 517AZ



SOIC-8 WIDE
X SUFFIX
CASE 751BE

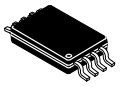

TSSOP-8
Y SUFFIX
CASE 948AL



WLCSP5
C5A SUFFIX
CASE 567JQ



WLCSP4
C4C SUFFIX
CASE 567JY

Description

The CAT24C32 is a EEPROM Serial 32-Kb I²C devices, internally organized as 4096 words of 8 bits each.

It features a 32-byte page write buffer and supports the Standard (100 kHz), Fast (400 kHz) and Fast-Plus (1 MHz) I²C protocol.

External address pins make it possible to address up to eight CAT24C32 devices on the same bus.

Features

- Supports Standard, Fast and Fast-Plus I²C Protocol
- 1.7 V to 5.5 V Supply Voltage Range
- 32-Byte Page Write Buffer
- Hardware Write Protection for Entire Memory
- Schmitt Triggers and Noise Suppression Filters on I²C Bus Inputs (SCL and SDA)
- Low Power CMOS Technology
- 1,000,000 Program/Erase Cycles
- 100 Year Data Retention
- Industrial and Extended Temperature Range
- PDIP, SOIC, TSSOP, UDFN, US 8-lead, WLCSP 4-ball and 5-ball Packages
- This Device is Pb-Free, Halogen Free/BFR Free, and RoHS Compliant

PIN CONFIGURATIONS (Top Views)

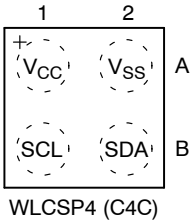

WLCSP4 (C4C)

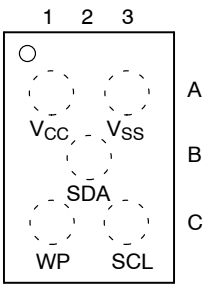

WLCSP5 (C5A)

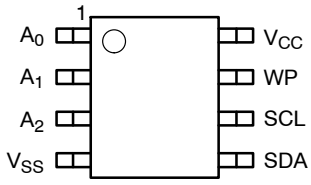

PDIP (L), SOIC (W), TSSOP (Y),
US (US), UDFN (HU4)

For the location of Pin 1, please consult the corresponding package drawing.

* In Development; please contact factory for availability

ORDERING INFORMATION

See detailed ordering and shipping information page 10 of this data sheet.

NOTE: Some of the devices on this data sheet have been **DISCONTINUED**. Please refer to the table on page 10.

© Semiconductor Components Industries, LLC, 2015

Downloaded from Arrow.com.

DEVICE MARKINGS

(SOIC-8)

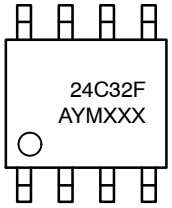

24C32F = Specific Device Code
A = Assembly Location
Y = Production Year (Last Digit)
M = Production Month (1−9, O, N, D)
XXX = Last Three Digits of Assembly Lot Number

(WLCSP-4)



B = Specific Device Code
Y = Production Year (Last Digit)
M = Production Month (1−9, O, N, D)

(WLCSP-5)



X = Specific Device Code
Y = Production Year (Last Digit)
M = Production Month (1−9, O, N, D)

(UDFN-8)

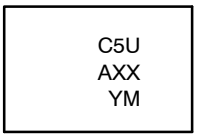

C5U = Specific Device Code
A = Assembly Location
XX = Last Two Digits of Assembly Lot Number
Y = Production Year (Last Digit)
M = Production Month (1−9, O, N, D)

(TSSOP-8)



C32F = Specific Device Code
A = Assembly Location
Y = Production Year (Last Digit)
M = Production Month (1−9, O, N, D)
XXX = Last Three Digits of Assembly Lot Number

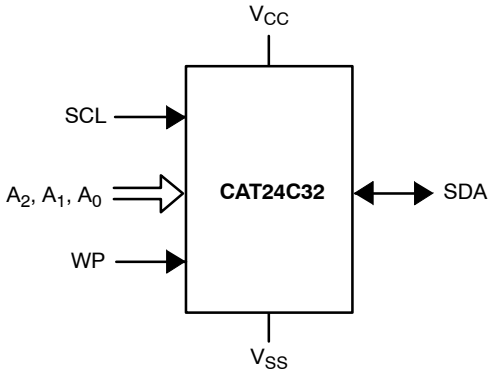

Figure 1. Functional Symbol

PIN FUNCTION

Pin Name	Function
A0, A1, A2	Device Address
SDA	Serial Data
SCL	Serial Clock
WP	Write Protect
V_{CC}	Power Supply
V_{SS}	Ground

Share Feedback
Your Opinion Matters

Downloaded from Arrow.com.

Table 1. ABSOLUTE MAXIMUM RATINGS

Parameters	Ratings	Units
Storage Temperature	−65 to +150	°C
Voltage on any Pin with Respect to Ground (Note 1)	−0.5 to +6.5	V

Stresses exceeding those listed in the Maximum Ratings table may damage the device. If any of these limits are exceeded, device functionality should not be assumed, damage may occur and reliability may be affected.

1. The DC input voltage on any pin should not be lower than −0.5 V or higher than V_{CC} + 0.5 V. During transitions, the voltage on any pin may undershoot to no less than −1.5 V or overshoot to no more than V_{CC} + 1.5 V, for periods of less than 20 ns.

Table 2. RELIABILITY CHARACTERISTICS (Note 2)

Symbol	Parameter	Min	Units
N_{END} (Note 3)	Endurance	1,000,000	Program/Erase Cycles
T_{DR}	Data Retention	100	Years

2. These parameters are tested initially and after a design or process change that affects the parameter according to appropriate AEC-Q100 and JEDEC test methods.
3. Page Mode, V_{CC} = 5 V, 25 °C.

Table 3. D.C. OPERATING CHARACTERISTICS

(V_{CC} = 1.8 V to 5.5 V, T_A = −40 °C to +125 °C and V_{CC} = 1.7 V to 5.5 V, T_A = −40 °C to +85 °C, unless otherwise specified.)

Symbol	Parameter	Test Conditions		Min	Max	Units
I_{CCR}	Read Current	Read, f_{SCL} = 400 kHz			1	mA
I_{CCW}	Write Current	Write, f_{SCL} = 400 kHz			2	mA
I_{SB}	Standby Current	All I/O Pins at GND or V_{CC}	T_A = −40 °C to +85 °C $V_{CC} \le$ 3.3 V		1	μA
			T_A = −40 °C to +85 °C V_{CC} > 3.3 V		3	
			T_A = −40 °C to +125 °C		5	
I_L	I/O Pin Leakage	Pin at GND or V_{CC}			2	μA
V_{IL}	Input Low Voltage			−0.5	V_{CC} x 0.3	V
V_{IH}	Input High Voltage	SCL, SDA Inputs		V_{CC} x 0.7	6.5	V
		WP, A0, A1, A2 Inputs		V_{CC} x 0.7	V_{CC} + 0.5	
V_{OL1}	Output Low Voltage	$V_{CC} \ge$ 2.5 V, I_{OL} = 3.0 mA			0.4	V
V_{OL2}	Output Low Voltage	V_{CC} < 2.5 V, I_{OL} = 1.0 mA			0.2	V

Product parametric performance is indicated in the Electrical Characteristics for the listed test conditions, unless otherwise noted. Product performance may not be indicated by the Electrical Characteristics if operated under different conditions.

Share Feedback
Your Opinion Matters

Downloaded from Arrow.com.

Table 4. PIN IMPEDANCE CHARACTERISTICS
(V_{CC} = 1.8 V to 5.5 V, T_A = −40 °C to +125 °C and V_{CC} = 1.7 V to 5.5 V, T_A = −40 °C to +85 °C, unless otherwise specified.)

Symbol	Parameter	Conditions	Max	Units
C_{IN} (Note 4)	SDA I/O Pin Capacitance	V_{IN} = 0 V, T_A = 25 °C, f = 1.0 MHz	8	pF
C_{IN} (Note 4)	Input Capacitance (other pins)	V_{IN} = 0 V, T_A = 25 °C, f = 1.0 MHz	6	pF
I_{WP} (Note 5)	WP Input Current	$V_{IN} < V_{IH}$, V_{CC} = 5.5 V	130	μA
		$V_{IN} < V_{IH}$, V_{CC} = 3.3 V	120	
		$V_{IN} < V_{IH}$, V_{CC} = 1.7 V	80	
		$V_{IN} > V_{IH}$	2	
I_A (Note 5)	Address Input Current (A0, A1, A2) Product Rev F	$V_{IN} < V_{IH}$, V_{CC} = 5.5 V	50	μA
		$V_{IN} < V_{IH}$, V_{CC} = 3.3 V	35	
		$V_{IN} < V_{IH}$, V_{CC} = 1.7 V	25	
		$V_{IN} > V_{IH}$	2	

4. These parameters are tested initially and after a design or process change that affects the parameter according to appropriate AEC-Q100 and JEDEC test methods.
5. When not driven, the WP, A0, A1 and A2 pins are pulled down to GND internally. For improved noise immunity, the internal pull-down is relatively strong; therefore the external driver must be able to supply the pull-down current when attempting to drive the input HIGH. To conserve power, as the input level exceeds the trip point of the CMOS input buffer (~ 0.5 x V_{CC}), the strong pull-down reverts to a weak current source.

Table 5. A.C. CHARACTERISTICS
(V_{CC} = 1.8 V to 5.5 V, T_A = −40 °C to +125 °C and V_{CC} = 1.7 V to 5.5 V, T_A = −40 °C to +85 °C.) (Note 6)

Symbol	Parameter	**Standard** V_{CC} = 1.7 V – 5.5 V		**Fast** V_{CC} = 1.7 V – 5.5 V		**Fast-Plus** (Note 9) V_{CC} = 2.5 V – 5.5 V T_A = −40 °C to +85 °C		Units
		Min	Max	Min	Max	Min	Max	
F_{SCL}	Clock Frequency		100		400		1,000	kHz
$t_{HD:STA}$	START Condition Hold Time	4		0.6		0.25		μs
t_{LOW}	Low Period of SCL Clock	4.7		1.3		0.45		μs
t_{HIGH}	High Period of SCL Clock	4		0.6		0.40		μs
$t_{SU:STA}$	START Condition Setup Time	4.7		0.6		0.25		μs
$t_{HD:DAT}$	Data In Hold Time	0		0		0		μs
$t_{SU:DAT}$	Data In Setup Time	250		100		50		ns
t_R (Note 7)	SDA and SCL Rise Time		1,000		300		100	ns
t_F (Note 7)	SDA and SCL Fall Time		300		300		100	ns
$t_{SU:STO}$	STOP Condition Setup Time	4		0.6		0.25		μs
t_{BUF}	Bus Free Time Between STOP and START	4.7		1.3		0.5		μs
t_{AA}	SCL Low to Data Out Valid		3.5		0.9		0.40	μs
t_{DH} (Note 7)	Data Out Hold Time	100		100		50		ns
T_i (Note 7)	Noise Pulse Filtered at SCL and SDA Inputs		100		100		100	ns
$t_{SU:WP}$	WP Setup Time	0		0		0		μs
$t_{HD:WP}$	WP Hold Time	2.5		2.5		1		μs
t_{WR}	Write Cycle Time		5		5		5	ms
t_{PU} (Notes 7, 8)	Power-up to Ready Mode		1		1		1	ms

6. Test conditions according to “A.C. Test Conditions” table.
7. Tested initially and after a design or process change that affects this parameter.
8. t_{PU} is the delay between the time V_{CC} is stable and the device is ready to accept commands.
9. Fast-Plus (1 MHz) speed class available for product revision “F”. The die revision “F” is identified by letter “F” or a dedicated marking code on top of the package.

Share Feedback
Your Opinion Matters

Downloaded from Arrow.com.

Table 6. A.C. TEST CONDITIONS

Input Drive Levels	0.2 x V_{CC} to 0.8 x V_{CC}
Input Rise and Fall Time	≤ 50 ns
Input Reference Levels	0.3 x V_{CC}, 0.7 x V_{CC}
Output Reference Level	0.5 x V_{CC}
Output Test Load	Current Source I_{OL} = 3 mA (V_{CC} ≥ 2.5 V); I_{OL} = 1 mA (V_{CC} < 2.5 V); C_L = 100 pF

Share Feedback
Your Opinion Matters

Downloaded from Arrow.com.

POWER-ON RESET (POR)

Each CAT24C32 incorporates Power-On Reset (POR) circuitry which protects the internal logic against powering up in the wrong state. The device will power up into Standby mode after V_{CC} exceeds the POR trigger level and will power down into Reset mode when V_{CC} drops below the POR trigger level. This bi-directional POR behavior protects the device against 'brown-out' failure following a temporary loss of power.

PIN DESCRIPTION

SCL: The Serial Clock input pin accepts the clock signal generated by the Master.

SDA: The Serial Data I/O pin accepts input data and delivers output data. In transmit mode, this pin is open drain. Data is acquired on the positive edge, and is delivered on the negative edge of SCL.

A_0, A_1 and A_2: The Address inputs set the device address that must be matched by the corresponding Slave address bits. The Address inputs are hard-wired HIGH or LOW allowing for up to eight devices to be used (cascaded) on the same bus. When left floating, these pins are pulled LOW internally. The Address inputs are not available for use with WLCSP 4-ball and 5-ball.

WP: When pulled HIGH, the Write Protect input pin inhibits all write operations. When left floating, this pin is pulled LOW internally. The WP input is not available for the WLCSP 4-ball, therefore all write operations are allowed for the device in this package.

FUNCTIONAL DESCRIPTION

The CAT24C32 supports the Inter-Integrated Circuit (I^2C) Bus protocol. The protocol relies on the use of a Master device, which provides the clock and directs bus traffic, and Slave devices which execute requests. The CAT24C32 operates as a Slave device. Both Master and Slave can transmit or receive, but only the Master can assign those roles.

I^2C Bus Protocol

The 2-wire I^2C bus consists of two lines, SCL and SDA, connected to the V_{CC} supply via pull-up resistors. The Master provides the clock to the SCL line, and either the Master or the Slaves drive the SDA line. A '0' is transmitted by pulling a line LOW and a '1' by letting it stay HIGH. Data transfer may be initiated only when the bus is not busy (see A.C. Characteristics). During data transfer, SDA must remain stable while SCL is HIGH.

START/STOP Condition

An SDA transition while SCL is HIGH creates a START or STOP condition (Figure 2). The START consists of a HIGH to LOW SDA transition, while SCL is HIGH. Absent the START, a Slave will not respond to the Master. The STOP completes all commands, and consists of a LOW to HIGH SDA transition, while SCL is HIGH.

Device Addressing

The Master addresses a Slave by creating a START condition and then broadcasting an 8-bit Slave address. For the CAT24C32, the first four bits of the Slave address are set to 1010 (Ah); the next three bits, A_2, A_1 and A_0, must match the logic state of the similarly named input pins. The devices in WLCSP (C5A and C4C) respond only to the Slave Address with A_2 A_1 A_0 = 0 0 0. The R/W bit tells the Slave whether the Master intends to read (1) or write (0) data (Figure 3).

Acknowledge

During the 9th clock cycle following every byte sent to the bus, the transmitter releases the SDA line, allowing the receiver to respond. The receiver then either acknowledges (ACK) by pulling SDA LOW, or does not acknowledge (NoACK) by letting SDA stay HIGH (Figure 4). Bus timing is illustrated in Figure 5.

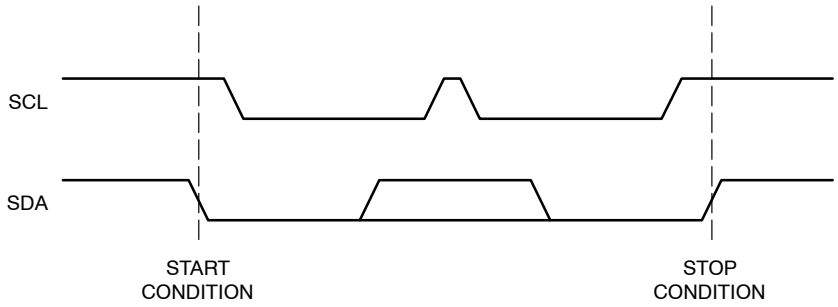

Figure 2. Start/Stop Timing

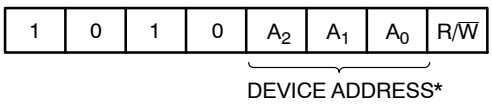

* The devices in WLCSP 4-ball and 5-ball respond only to Slave Address byte with A_2 A_1 A_0 = 0 0 0

Figure 3. Slave Address Bits

Share Feedback
Your Opinion Matters

Downloaded from Arrow.com.

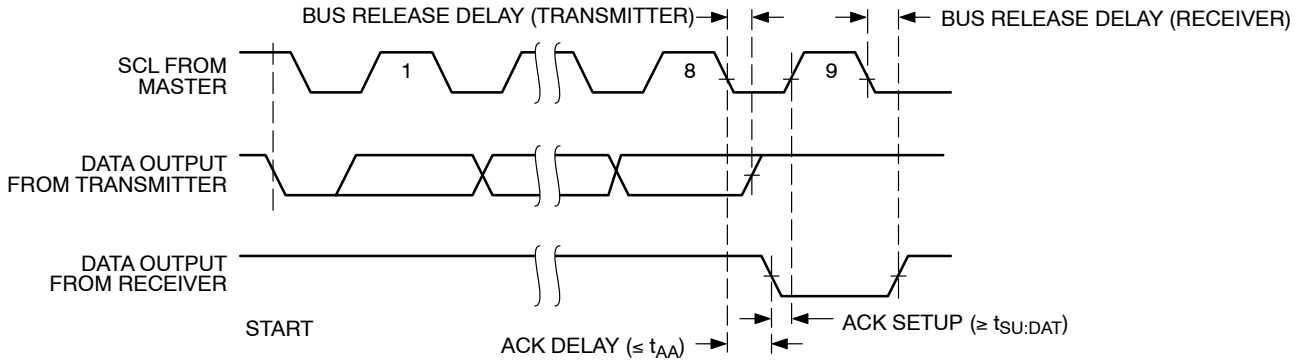

Figure 4. Acknowledge Timing

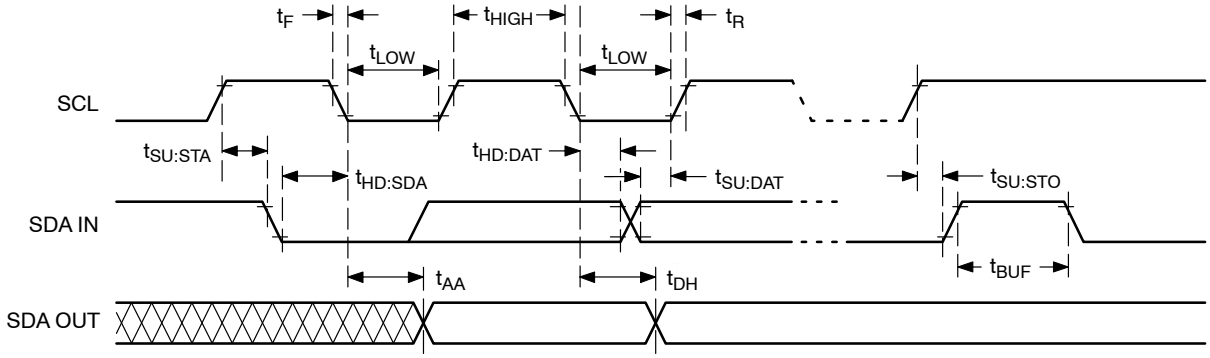

Figure 5. Bus Timing

WRITE OPERATIONS

Byte Write

To write data to memory, the Master creates a START condition on the bus and then broadcasts a Slave address with the R/$\overline{W}$ bit set to '0'. The Master then sends two address bytes and a data byte and concludes the session by creating a STOP condition on the bus. The Slave responds with ACK after every byte sent by the Master (Figure 6). The STOP starts the internal Write cycle, and while this operation is in progress (t_{WR}), the SDA output is tri-stated and the Slave does not acknowledge the Master (Figure 7).

Page Write

The Byte Write operation can be expanded to Page Write, by sending more than one data byte to the Slave before issuing the STOP condition (Figure 8). Up to 32 distinct data bytes can be loaded into the internal Page Write Buffer starting at the address provided by the Master. The page address is latched, and as long as the Master keeps sending data, the internal byte address is incremented up to the end of page, where it then wraps around (within the page). New data can therefore replace data loaded earlier. Following the STOP, data loaded during the Page Write session will be written to memory in a single internal Write cycle (t_{WR}).

Acknowledge Polling

As soon (and as long) as internal Write is in progress, the Slave will not acknowledge the Master. This feature enables the Master to immediately follow-up with a new Read or Write request, rather than wait for the maximum specified Write time (t_{WR}) to elapse. Upon receiving a NoACK response from the Slave, the Master simply repeats the request until the Slave responds with ACK.

Hardware Write Protection

With the WP pin held HIGH, the entire memory is protected against Write operations. If the WP pin is left floating or is grounded, it has no impact on the Write operation. The state of the WP pin is strobed on the last falling edge of SCL immediately preceding the 1st data byte (Figure 9). If the WP pin is HIGH during the strobe interval, the Slave will not acknowledge the data byte and the Write request will be rejected.

Delivery State

The CAT24C32 is shipped erased, i.e., all bytes are FFh.

Share Feedback
Your Opinion Matters

Downloaded from Arrow.com.

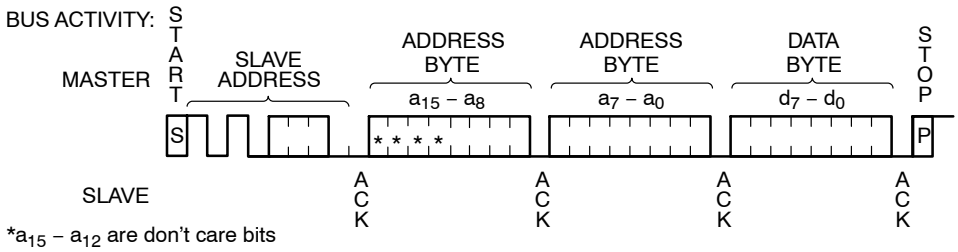

Figure 6. Byte Write Sequence

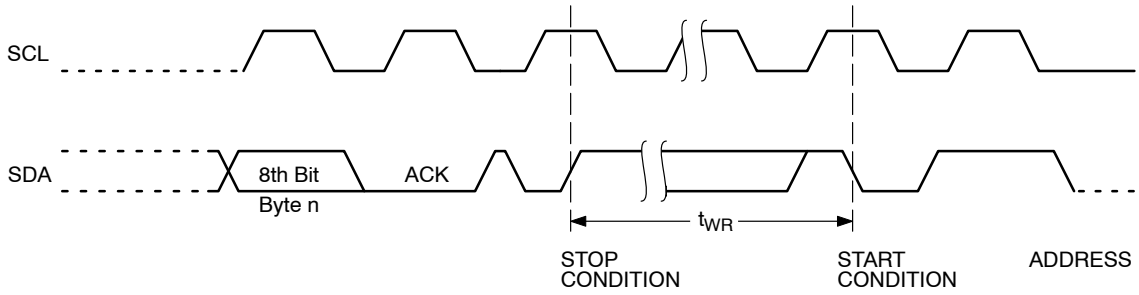

Figure 7. Write Cycle Timing

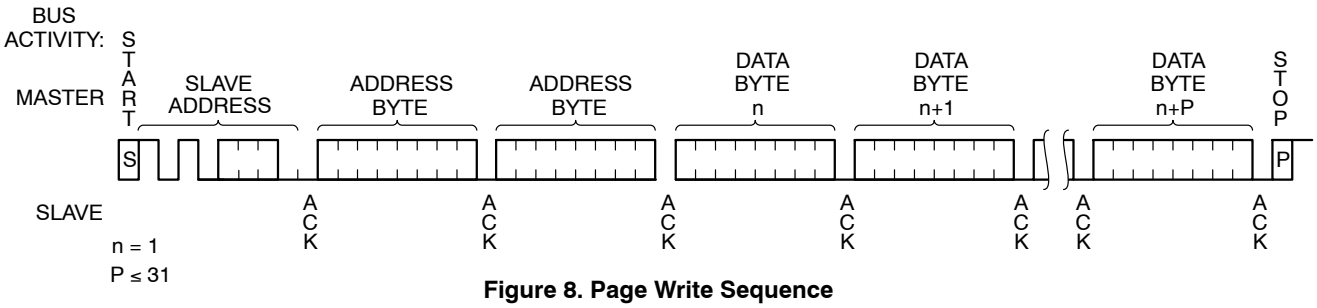

Figure 8. Page Write Sequence

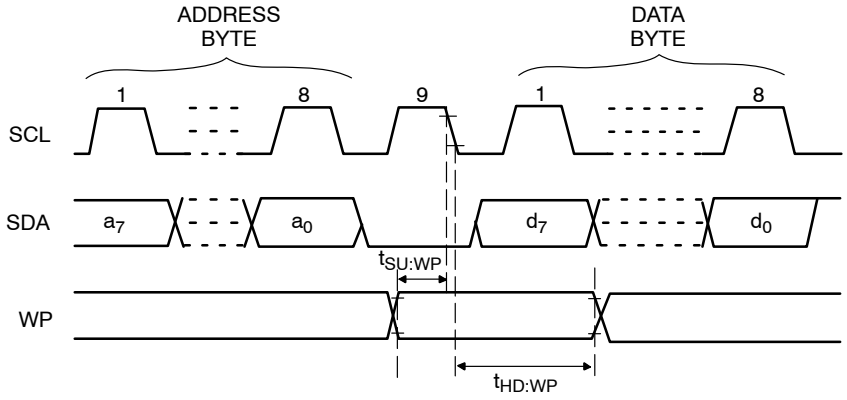

Figure 9. WP Timing

Share Feedback
Your Opinion Matters

Downloaded from Arrow.com.

READ OPERATIONS

Immediate Read

To read data from memory, the Master creates a START condition on the bus and then broadcasts a Slave address with the R/$\overline{W}$ bit set to '1'. The Slave responds with ACK and starts shifting out data residing at the current address. After receiving the data, the Master responds with NoACK and terminates the session by creating a STOP condition on the bus (Figure 10). The Slave then returns to Standby mode.

Selective Read

To read data residing at a specific address, the selected address must first be loaded into the internal address register. This is done by starting a Byte Write sequence, whereby the Master creates a START condition, then broadcasts a Slave address with the R/$\overline{W}$ bit set to '0' and then sends two address bytes to the Slave. Rather than completing the Byte Write sequence by sending data, the Master then creates a START condition and broadcasts a Slave address with the R/$\overline{W}$ bit set to '1'. The Slave responds with ACK after every byte sent by the Master and then sends out data residing at the selected address. After receiving the data, the Master responds with NoACK and then terminates the session by creating a STOP condition on the bus (Figure 11).

Sequential Read

If, after receiving data sent by the Slave, the Master responds with ACK, then the Slave will continue transmitting until the Master responds with NoACK followed by STOP (Figure 12). During Sequential Read the internal byte address is automatically incremented up to the end of memory, where it then wraps around to the beginning of memory.

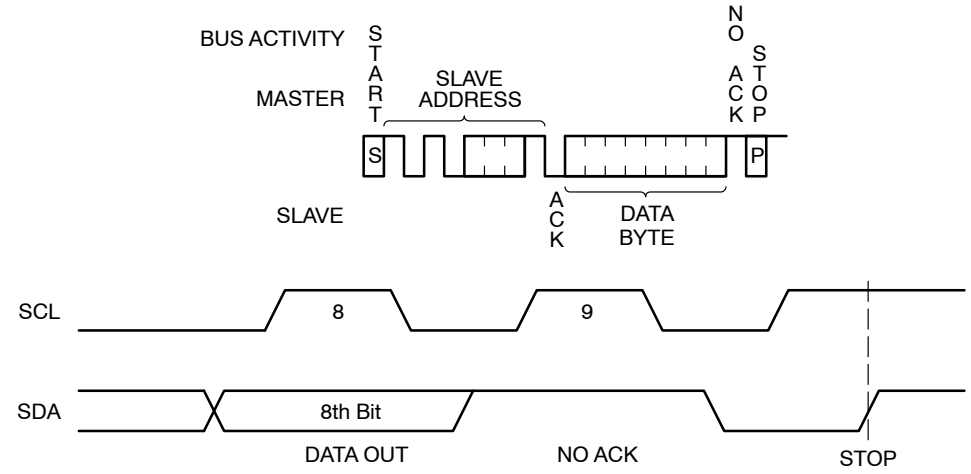

Figure 10. Immediate Read Sequence and Timing

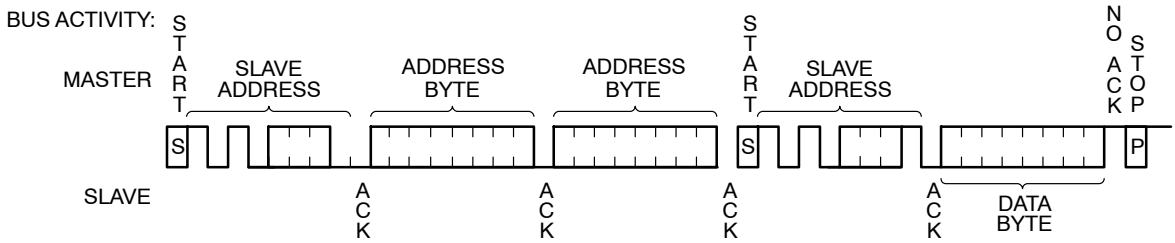

Figure 11. Selective Read Sequence

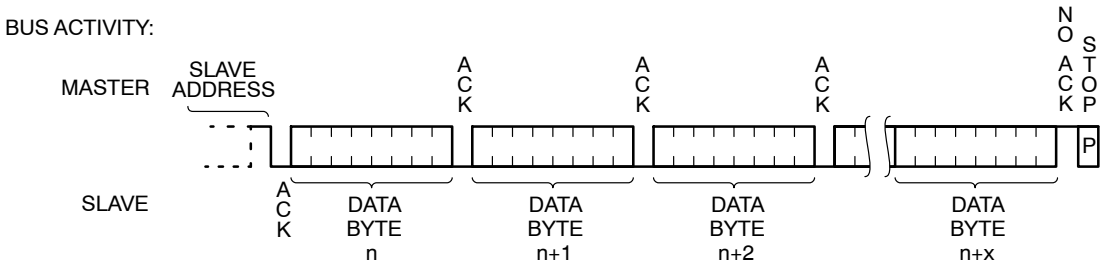

Figure 12. Sequential Read Sequence

Share Feedback
Your Opinion Matters

Downloaded from Arrow.com.

ORDERING INFORMATION

Device Order Number	Specific Device Marking	Package Type	Temperature Range	Lead Finish	Shipping†
CAT24C32HU4I-GT3	C5U	UDFN8	I = Industrial (–40 °C to +85 °C)	NiPdAu	3,000 / Tape & Reel
CAT24C32C5ATR	2	WLCSP5	I = Industrial (–40 °C to +85 °C)	SnAgCu	5,000 / Tape & Reel
CAT24C32C5CTR	P	WLCSP5 with Die Coat	I = Industrial (–40 °C to +85 °C)	SnAgCu	5,000 / Tape & Reel
CAT24C32C4CTR	B	WLCSP4 with Die Coat	I = Industrial (–40 °C to +85 °C)	SnAg	5,000 / Tape & Reel
CAT24C32XI-T2 (Note 13)	TBD	SOIC-8	I = Industrial (–40 °C to +85 °C)	Matte-Tin	2,000 / Tape & Reel
CAT24C32WI-GT3	24C32F	SOIC-8, JEDEC	I = Industrial (–40 °C to +85 °C)	NiPdAu	3,000 / Tape & Reel
CAT24C32YI-GT3	C32F	TSSOP-8	I = Industrial (–40 °C to +85 °C)	NiPdAu	3,000 / Tape & Reel

DISCONTINUED (Note 14)

CAT24C32USI-T3	TBD	US8	I = Industrial (–40 °C to +85 °C)	Matte-Tin	3,000 / Tape & Reel

† For information on tape and reel specifications, including part orientation and tape sizes, please refer to our Tape and Reel Packaging Specifications Brochure, BRD8011/D.

10. All packages are RoHS-compliant (Lead-free, Halogen-free).
11. The standard lead finish is NiPdAu.
12. **Caution: The EEPROM devices delivered in WLCSP must never be exposed to ultraviolet light. When exposed to ultraviolet light the EEPROM cells lose their stored data.**
13. In development.
14. **DISCONTINUED:** This device is not available. Please contact your **onsemi** representative for information. The most current information on this device may be available on www.onsemi.com.

Share Feedback
Your Opinion Matters

Downloaded from Arrow.com.

REVISION HISTORY

Revision	Description of Changes	Date
28	CAT24C32USI-T3 OPN Marked as Discontinued.	07/14/2025

This document has undergone updates prior to the inclusion of this revision history table. The changes tracked here only reflect updates made on the noted approval dates.

Share Feedback
Your Opinion Matters

Downloaded from Arrow.com.

PACKAGE DIMENSIONS

SOIC−8, 208 mils
CASE 751BE
ISSUE O

DATE 19 DEC 2008

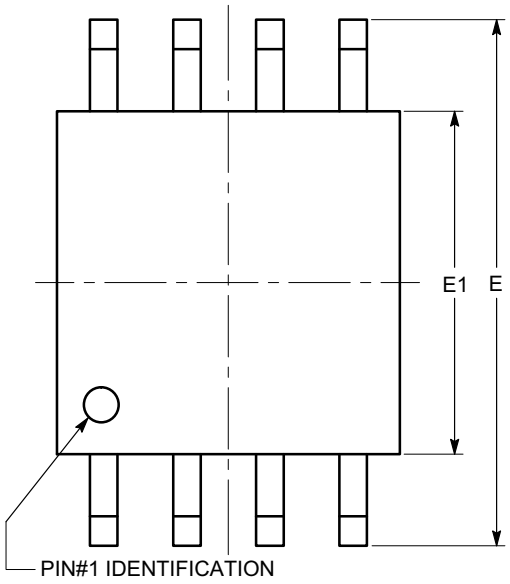

TOP VIEW

SYMBOL	MIN	NOM	MAX
A			2.03
A1	0.05		0.25
b	0.36		0.48
c	0.19		0.25
D	5.13		5.33
E	7.75		8.26
E1	5.13		5.38
e	1.27 BSC		
L	0.51		0.76
θ	0°		8°

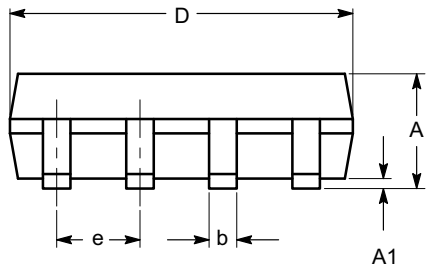

SIDE VIEW

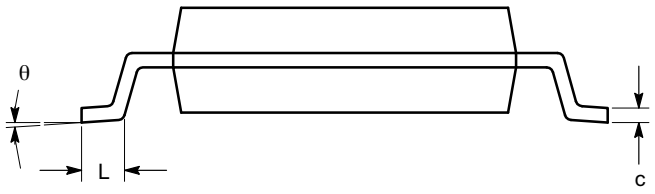

END VIEW

Notes:
(1) All dimensions are in millimeters. Angles in degrees.
(2) Complies with EIAJ EDR-7320.

Share Feedback
Your Opinion Matters

Downloaded from Arrow.com.



SCALE 2:1

UDFN8, 2x3 EXTENDED PAD
CASE 517AZ
ISSUE A

DATE 23 MAR 2015

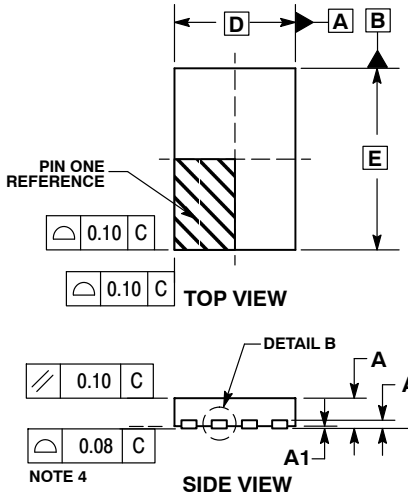

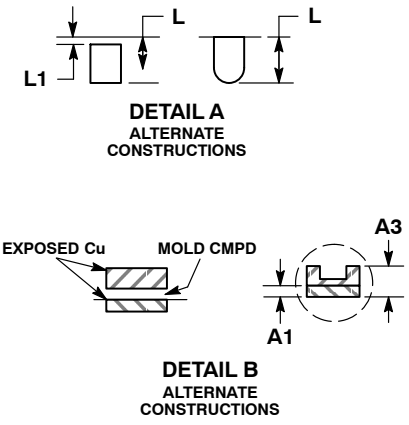

NOTES:
1. DIMENSIONING AND TOLERANCING PER ASME Y14.5M, 1994.
2. CONTROLLING DIMENSION: MILLIMETERS.
3. DIMENSION b APPLIES TO PLATED TERMINAL AND IS MEASURED BETWEEN 0.15 AND 0.25MM FROM THE TERMINAL TIP.
4. COPLANARITY APPLIES TO THE EXPOSED PAD AS WELL AS THE TERMINALS.

	MILLIMETERS	
DIM	MIN	MAX
A	0.45	0.55
A1	0.00	0.05
A3	0.13 REF	
b	0.20	0.30
D	2.00 BSC	
D2	1.35	1.45
E	3.00 BSC	
E2	1.25	1.35
e	0.50 BSC	
L	0.25	0.35
L1	---	0.15

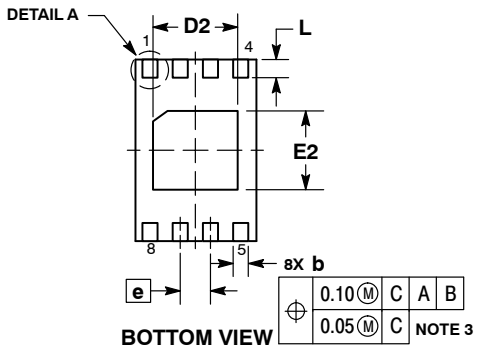

GENERIC MARKING DIAGRAM*

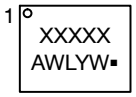

XXXXX = Specific Device Code
A = Assembly Location
WL = Wafer Lot
Y = Year
W = Work Week
▪ = Pb−Free Package

*This information is generic. Please refer to device data sheet for actual part marking. Pb−Free indicator, “G” or microdot “ ▪”, may or may not be present.

RECOMMENDED SOLDERING FOOTPRINT*

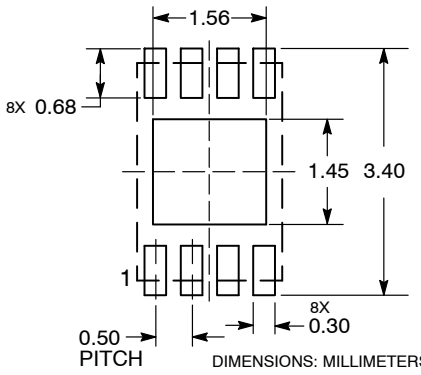

*For additional information on our Pb−Free strategy and soldering details, please download the **onsemi** Soldering and Mounting Techniques Reference Manual, SOLDERRM/D.

DOCUMENT NUMBER:	**98AON42552E**	Electronic versions are uncontrolled except when accessed directly from the Document Repository. Printed versions are uncontrolled except when stamped “CONTROLLED COPY” in red.
DESCRIPTION:	**UDFN8, 2X3 EXTENDED PAD**	**PAGE 1 OF 1**

onsemi and onsemi are trademarks of Semiconductor Components Industries, LLC dba **onsemi** or its subsidiaries in the United States and/or other countries. **onsemi** reserves the right to make changes without further notice to any products herein. **onsemi** makes no warranty, representation or guarantee regarding the suitability of its products for any particular purpose, nor does **onsemi** assume any liability arising out of the application or use of any product or circuit, and specifically disclaims any and all liability, including without limitation special, consequential or incidental damages. **onsemi** does not convey any license under its patent rights nor the rights of others.

© Semiconductor Components Industries, LLC, 2011

Downloaded from Arrow.com.

WLCSP5, 1.34x0.91
CASE 567JQ
ISSUE A

SCALE 4:1

DATE 09 JUN 2015

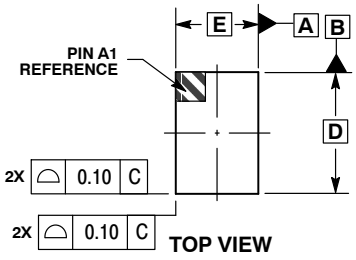

TOP VIEW

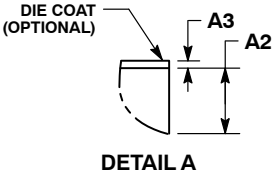

DETAIL A

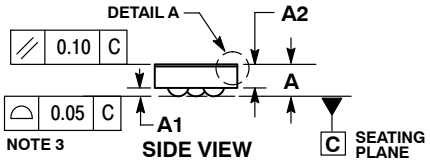

SIDE VIEW

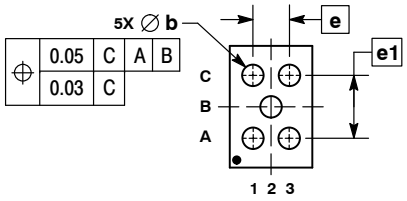

BOTTOM VIEW

NOTES:
1. DIMENSIONING AND TOLERANCING PER ASME Y14.5M, 1994.
2. CONTROLLING DIMENSION: MILLIMETERS.
3. COPLANARITY APPLIES TO THE SPHERICAL CROWNS OF THE SOLDER BALLS.
4. DIMENSION b IS MEASURED AT THE MAXIMUM BALL DIAMETER PARALLEL TO DATUM C.

	MILLIMETERS	
DIM	MIN	MAX
A	---	0.35
A1	0.08	0.12
A2	0.23 REF	
A3	0.025 REF	
b	0.16	0.20
D	1.34 BSC	
E	0.91 BSC	
e	0.40 BSC	
e1	0.693 BSC	

GENERIC MARKING DIAGRAM*



X = Specific Device Code
Y = Year
W = Work Week

*This information is generic. Please refer to device data sheet for actual part marking. Pb−Free indicator, “G” or microdot “ ▪”, may or may not be present.

RECOMMENDED SOLDERING FOOTPRINT*

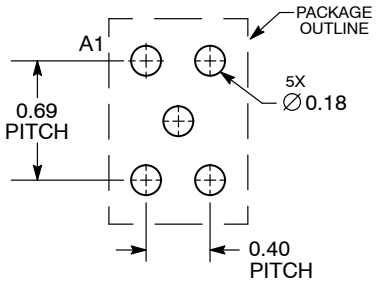

DIMENSIONS: MILLIMETERS

*For additional information on our Pb−Free strategy and soldering details, please download the ON Semiconductor Soldering and Mounting Techniques Reference Manual, SOLDERRM/D.

DOCUMENT NUMBER:	**98AON82067F**	Electronic versions are uncontrolled except when accessed directly from the Document Repository. Printed versions are uncontrolled except when stamped “CONTROLLED COPY” in red.	
DESCRIPTION:	**WLCSP5, 1.34X0.91**		**PAGE 1 OF 1**

onsemi and ONSEMI are trademarks of Semiconductor Components Industries, LLC dba **onsemi** or its subsidiaries in the United States and/or other countries. **onsemi** reserves the right to make changes without further notice to any products herein. **onsemi** makes no warranty, representation or guarantee regarding the suitability of its products for any particular purpose, nor does **onsemi** assume any liability arising out of the application or use of any product or circuit, and specifically disclaims any and all liability, including without limitation special, consequential or incidental damages. **onsemi** does not convey any license under its patent rights nor the rights of others.

Downloaded from Arrow.com.

WLCSP4, 0.77x0.77
CASE 567JY
ISSUE C

SCALE 4:1

DATE 07 MAR 2017

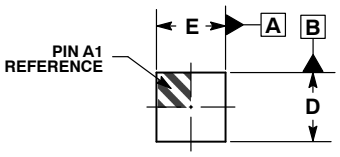

TOP VIEW

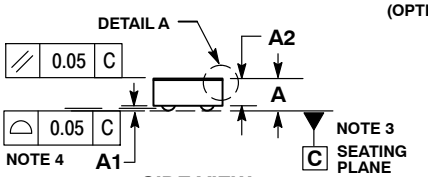

SIDE VIEW

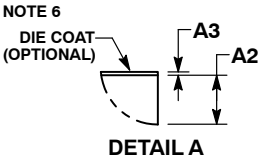

DETAIL A

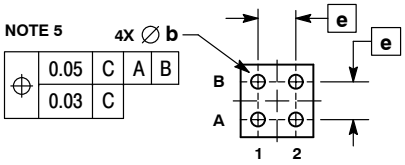

BOTTOM VIEW

NOTES:
1. DIMENSIONING AND TOLERANCING PER ASME Y14.5M, 1994.
2. CONTROLLING DIMENSION: MILLIMETERS.
3. DATUM C, THE SEATING PLANE, IS DEFINED BY THE SPHERICAL CROWNS OF THE SOLDER BALLS.
4. COPLANARITY APPLIES TO SPHERICAL CROWNS OF THE SOLDER BALLS.
5. DIMENSION b IS MEASURED AT THE MAXIMUM CONTACT BALL DIAMETER PARALLEL TO DATUM C.
6. BACKSIDE COATING IS OPTIONAL.

	MILLIMETERS		
DIM	MIN	NOM	MAX
A	---	---	0.35
A1	0.04	0.06	0.08
A2		0.23 REF	
A3		0.025 REF	
b	0.15	0.155	0.16
D	0.75	0.77	0.79
E	0.75	0.77	0.79
e		0.40 BSC	

RECOMMENDED SOLDERING FOOTPRINT*

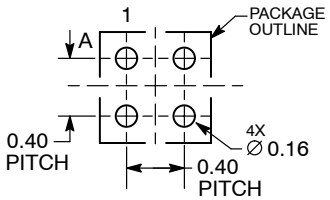

DIMENSIONS: MILLIMETERS

*For additional information on our Pb−Free strategy and soldering details, please download the ON Semiconductor Soldering and Mounting Techniques Reference Manual, SOLDERRM/D.

GENERIC MARKING DIAGRAM*



X = Specific Device Code
Y = Year
W = Work Week

*This information is generic. Please refer to device data sheet for actual part marking. Pb−Free indicator, “G” or microdot “ ▪”, may or may not be present.

DOCUMENT NUMBER:	**98AON85186F**	Electronic versions are uncontrolled except when accessed directly from the Document Repository. Printed versions are uncontrolled except when stamped “CONTROLLED COPY” in red.
DESCRIPTION:	**WLCSP4, 0.77X0.77**	**PAGE 1 OF 1**

onsemi and ONSEMI are trademarks of Semiconductor Components Industries, LLC dba **onsemi** or its subsidiaries in the United States and/or other countries. **onsemi** reserves the right to make changes without further notice to any products herein. **onsemi** makes no warranty, representation or guarantee regarding the suitability of its products for any particular purpose, nor does **onsemi** assume any liability arising out of the application or use of any product or circuit, and specifically disclaims any and all liability, including without limitation special, consequential or incidental damages. **onsemi** does not convey any license under its patent rights nor the rights of others.

© Semiconductor Components Industries, LLC, 2014

Downloaded from Arrow.com.

SOIC−8, 150 mils
CASE 751BD
ISSUE O

DATE 19 DEC 2008

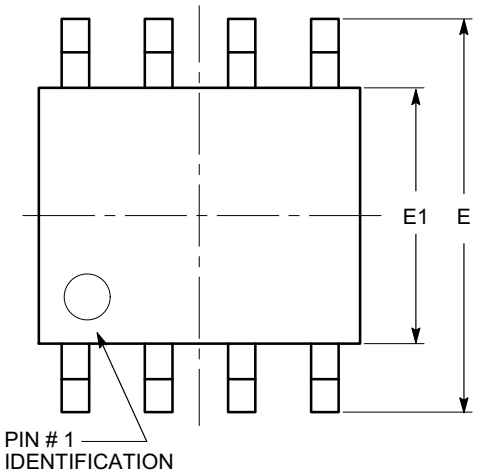

TOP VIEW

SYMBOL	MIN	NOM	MAX
A	1.35		1.75
A1	0.10		0.25
b	0.33		0.51
c	0.19		0.25
D	4.80		5.00
E	5.80		6.20
E1	3.80		4.00
e	1.27 BSC		
h	0.25		0.50
L	0.40		1.27
θ	0º		8º

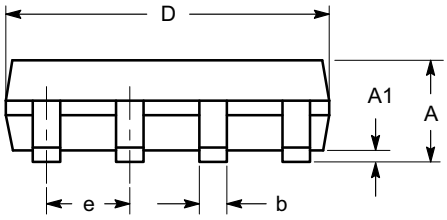

SIDE VIEW

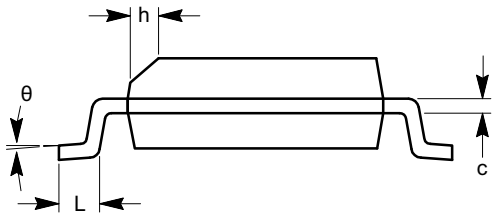

END VIEW

Notes:
(1) All dimensions are in millimeters. Angles in degrees.
(2) Complies with JEDEC MS-012.

DOCUMENT NUMBER:	**98AON34272E**	Electronic versions are uncontrolled except when accessed directly from the Document Repository. Printed versions are uncontrolled except when stamped "CONTROLLED COPY" in red.
DESCRIPTION:	**SOIC−8, 150 MILS**	**PAGE 1 OF 1**

onsemi and onsemi are trademarks of Semiconductor Components Industries, LLC dba **onsemi** or its subsidiaries in the United States and/or other countries. **onsemi** reserves the right to make changes without further notice to any products herein. **onsemi** makes no warranty, representation or guarantee regarding the suitability of its products for any particular purpose, nor does **onsemi** assume any liability arising out of the application or use of any product or circuit, and specifically disclaims any and all liability, including without limitation special, consequential or incidental damages. **onsemi** does not convey any license under its patent rights nor the rights of others.

Downloaded from Arrow.com.

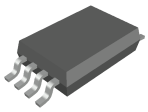

TSSOP8, 4.4x3.0, 0.65P
CASE 948AL
ISSUE A

DATE 20 MAY 2022

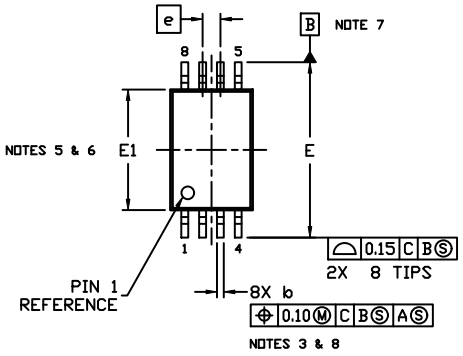

TOP VIEW

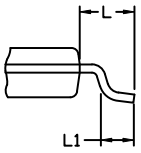

DETAIL A

NOTES:

1. DIMENSIONING AND TOLERANCING PER ASME Y14.5, 2009..
2. CONTROLLING DIMENSION: MILLIMETERS
3. DIMENSION b DOES NOT INCLUDE DAMBAR PROTRUSION. ALLOWABLE PROTRUSION SHALL NOT BE 0.15 IN EXCESS OF MAXIMUM MATERIAL CONDITION.
4. DIMENSION D DOES NOT INCLUDE MOLD FLASH, PROTRUSIONS OR GATE BURRS. MOLD FLASH, PROTRUSIONS OR GATE BURRS SHALL NOT EXCEED 0.15 PER SIDE.
5. DIMENSION E1 DOES NOT INCLUDE INTERLEAD FLASH OR PROTRUSION. INTERLEAD FLASH OR PROTRUSION SHALL NOT EXCEED 0.25 PER SIDE.
6. THE PACKAGE TOP MAY BE SMALLER THAN THE PACKAGE BOTTOM. DIMENSIONS D AND E1 ARE DETERMINED AT THE OUTERMOST EXTREMES OF THE PLASTIC BODY AT DATUM PLANE H.
7. DATUMS A AND B ARE TO BE DETERMINED AT DATUM H.
8. DIMENSIONS b AND c APPLY TO THE FLAT SECTION OF THE LEAD BETWEEN 0.10 AND 0.25 FROM THE LEAD TIP..
9. A1 IS DEFINED AS THE LOWEST VERTICAL DISTANCE FROM THE SEATING PLANE TO THE LOWEST POINT ON THE PACKAGE BODY..

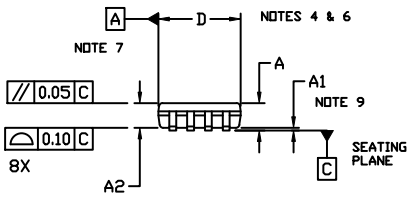

SIDE VIEW

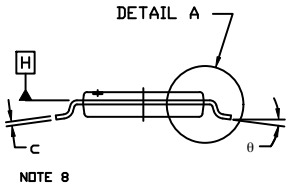

END VIEW

DIM	MILLIMETERS		
	MIN.	NOM.	MAX.
A	---	---	1.20
A1	0.05	---	0.15
A2	0.80	0.90	1.05
b	0.19	---	0.30
c	0.09	---	0.20
D	2.90	3.00	3.10
E	6.30	6.40	6.50
E1	4.30	4.40	4.50
e	0.65 BSC		
L	1.00 REF		
L1	0.50	0.60	0.70
θ	0°	---	8°

GENERIC MARKING DIAGRAM*

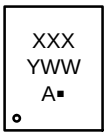

XXX = Specific Device Code
Y = Year
WW = Work Week
A = Assembly Location
▪ = Pb−Free Package

*This information is generic. Please refer to device data sheet for actual part marking. Pb−Free indicator, “G” or microdot “▪”, may or may not be present. Some products may not follow the Generic Marking.

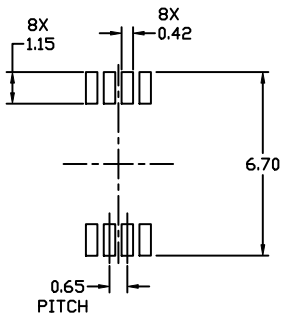

RECOMMENDED
MOUNTING FOOTPRINT*

* For additional information on our Pb-Free strategy and soldering details, please download the ON Semiconductor Soldering and Mounting Techniques Reference Manual, SOLDERRM/D.

DOCUMENT NUMBER:	**98AON34428E**	Electronic versions are uncontrolled except when accessed directly from the Document Repository. Printed versions are uncontrolled except when stamped “CONTROLLED COPY” in red.	
DESCRIPTION:	**TSSOP8, 4.4X3.0, 0.65P**		**PAGE 1 OF 1**

onsemi and ONSEMI are trademarks of Semiconductor Components Industries, LLC dba **onsemi** or its subsidiaries in the United States and/or other countries. **onsemi** reserves the right to make changes without further notice to any products herein. **onsemi** makes no warranty, representation or guarantee regarding the suitability of its products for any particular purpose, nor does **onsemi** assume any liability arising out of the application or use of any product or circuit, and specifically disclaims any and all liability, including without limitation special, consequential or incidental damages. **onsemi** does not convey any license under its patent rights nor the rights of others.

Downloaded from Arrow.com.

onsemi, ONSEMI , and other names, marks, and brands are registered and/or common law trademarks of Semiconductor Components Industries, LLC dba "**onsemi**" or its affiliates and/or subsidiaries in the United States and/or other countries. **onsemi** owns the rights to a number of patents, trademarks, copyrights, trade secrets, and other intellectual property. A listing of **onsemi**'s product/patent coverage may be accessed at www.onsemi.com/site/pdf/Patent−Marking.pdf. **onsemi** reserves the right to make changes at any time to any products or information herein, without notice. The information herein is provided "as−is" and **onsemi** makes no warranty, representation or guarantee regarding the accuracy of the information, product features, availability, functionality, or suitability of its products for any particular purpose, nor does **onsemi** assume any liability arising out of the application or use of any product or circuit, and specifically disclaims any and all liability, including without limitation special, consequential or incidental damages. Buyer is responsible for its products and applications using **onsemi** products, including compliance with all laws, regulations and safety requirements or standards, regardless of any support or applications information provided by **onsemi**. "Typical" parameters which may be provided in **onsemi** data sheets and/or specifications can and do vary in different applications and actual performance may vary over time. All operating parameters, including "Typicals" must be validated for each customer application by customer's technical experts. **onsemi** does not convey any license under any of its intellectual property rights nor the rights of others. **onsemi** products are not designed, intended, or authorized for use as a critical component in life support systems or any FDA Class 3 medical devices or medical devices with a same or similar classification in a foreign jurisdiction or any devices intended for implantation in the human body. Should Buyer purchase or use **onsemi** products for any such unintended or unauthorized application, Buyer shall indemnify and hold **onsemi** and its officers, employees, subsidiaries, affiliates, and distributors harmless against all claims, costs, damages, and expenses, and reasonable attorney fees arising out of, directly or indirectly, any claim of personal injury or death associated with such unintended or unauthorized use, even if such claim alleges that **onsemi** was negligent regarding the design or manufacture of the part. **onsemi** is an Equal Opportunity/Affirmative Action Employer. This literature is subject to all applicable copyright laws and is not for resale in any manner.

ADDITIONAL INFORMATION

TECHNICAL PUBLICATIONS:
Technical Library: www.onsemi.com/design/resources/technical−documentation
onsemi Website: www.onsemi.com

ONLINE SUPPORT: www.onsemi.com/support
For additional information, please contact your local Sales Representative at www.onsemi.com/support/sales

◊

Downloaded from Arrow.com.