PNP Epitaxial Silicon Transistor

BC327

1. Collector
2. Base
3. Emitter

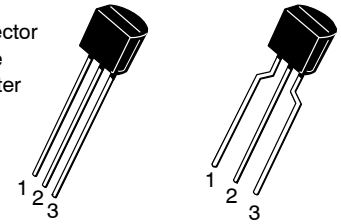

TO−92 3
CASE 135AN

TO−92 3 LF
CASE 135AR

Features

- Switching and Amplifier Applications
- Suitable for AF−Driver Stages and Low−Power Output Stages
- Complement to BC337/BC338
- These are Pb−Free Devices

ABSOLUTE MAXIMUM RATINGS

(T_A = 25°C unless otherwise noted.)

Symbol	Parameter	Value	Unit
V_{CES}	Collector−Emitter Voltage	−50	V
V_{CEO}	Collector−Emitter Voltage	−45	V
V_{EBO}	Emitter−Base Voltage	−5	V
I_C	Collector Current (DC)	−800	mA
T_J	Junction Temperature	150	°C
T_{STG}	Storage Temperature	−55 to +150	°C

Stresses exceeding those listed in the Maximum Ratings table may damage the device. If any of these limits are exceeded, device functionality should not be assumed, damage may occur and reliability may be affected.

THERMAL CHARACTERISTICS

(T_A = 25°C unless otherwise noted.) (Note 1)

Symbol	Characteristic	Value	Unit
P_D	Power Dissipation Derate Above 25°C	625 5.0	mW mW/°C
$R_{\theta JA}$	Thermal Resistance, Junction to Ambient	200	°C/W

1. PCB size: FR−4, 76 mm × 114 mm × 1.57 mm (3.0 inch × 4.5 inch × 0.062 inch) with minimum land pattern size.

MARKING DIAGRAM

A = Assembly Location
BC327xx = Specific Device Code
xx = 25, 40
Y = Year
W = Work Week

ORDERING INFORMATION

Device	Package	Shipping
BC327BU	TO−92 3 (Pb−Free)	10,000 Units / BLKBG
BC32740BU	TO−92 3 (Pb−Free)	10,000 Units / BLKBG
BC32725BU	TO−92 3 (Pb−Free)	10,000 Units / BLKBG
BC32725TA	TO−92 3 LF (Pb−Free)	2,000 Units / FNFLD
BC32740TA	TO−92 3 LF (Pb−Free)	2,000 Units / FNFLD

© Semiconductor Components Industries, LLC, 2002

Downloaded from Arrow.com.

ELECTRICAL CHARACTERISTICS (T_A = 25°C unless otherwise noted.)

Symbol	Parameter	Conditions	Min	Typ	Max	Unit
BV_{CEO}	Collector−Emitter Breakdown Voltage	I_C = −10 mA, I_B = 0	−45	–	–	V
BV_{CES}	Collector−Emitter Breakdown Voltage	I_C = −0.1 mA, V_{BE} = 0	−50	–	–	V
BV_{EBO}	Emitter−Base Breakdown Voltage	I_E = −10 μA, I_C = 0	−5	–	–	V
I_{CES}	Collector Cut−Off Current	V_{CE} = −45 V, I_B = 0	–	−2	−100	nA
h_{FE1}	DC Current Gain	V_{CE} = −1 V, I_C = −100 mA	100	–	630	
h_{FE2}		V_{CE} = −1 V, I_C = −300 mA	60	–		
V_{CE}(sat)	Collector−Emitter Saturation Voltage	I_C = −500 mA, I_B = −50 mA	–	–	−0.7	V
V_{BE}(on)	Base−Emitter On Voltage	V_{CE} = −1 V, I_C = −300 mA	–	–	−1.2	V
f_T	Current Gain Bandwidth Product	V_{CE} = −5 V, I_C = −10 mA, f = 20 MHz	–	100	–	MHz
C_{ob}	Output Capacitance	V_{CB} = −10 V, I_E = 0, f = 1 MHz	–	12	–	pF

Product parametric performance is indicated in the Electrical Characteristics for the listed test conditions, unless otherwise noted. Product performance may not be indicated by the Electrical Characteristics if operated under different conditions.

h_{FE} Classification

Classification	16	25	40
h_{FE1}	100 ~ 250	160 ~ 400	250 ~ 630
h_{FE2}	60 ~	100 ~	170 ~

TYPICAL CHARACTERISTICS

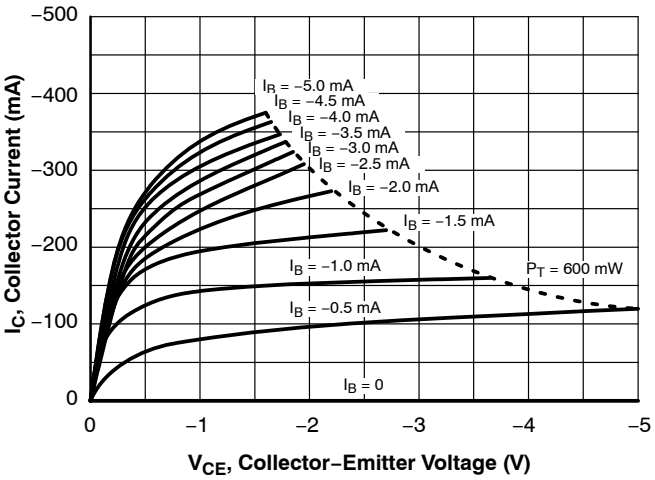

Figure 1. Static Characteristic

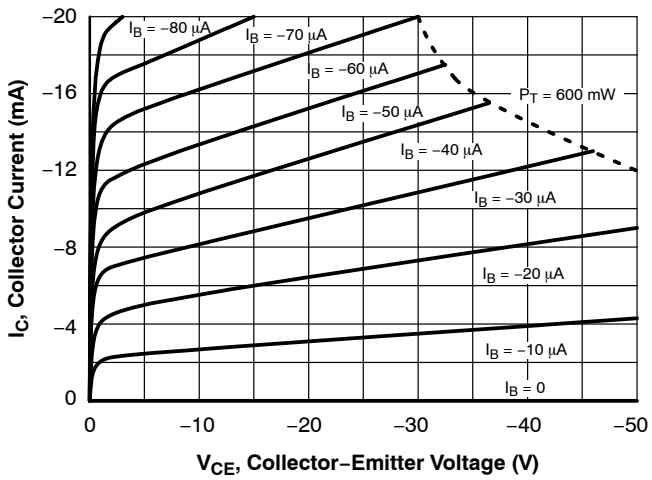

Figure 2. Static Characteristic

Share Feedback
Your Opinion Matters

Downloaded from Arrow.com.

TYPICAL CHARACTERISTICS (Continued)

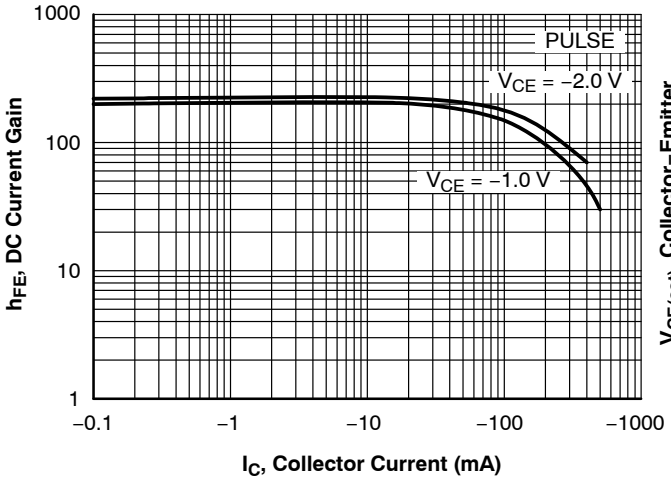

Figure 3. DC Current Gain

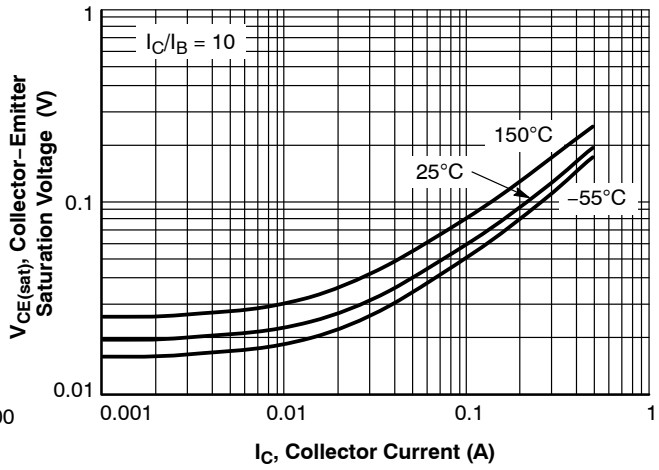

Figure 4. Collector−Emitter Saturation Voltage vs. Collector Current

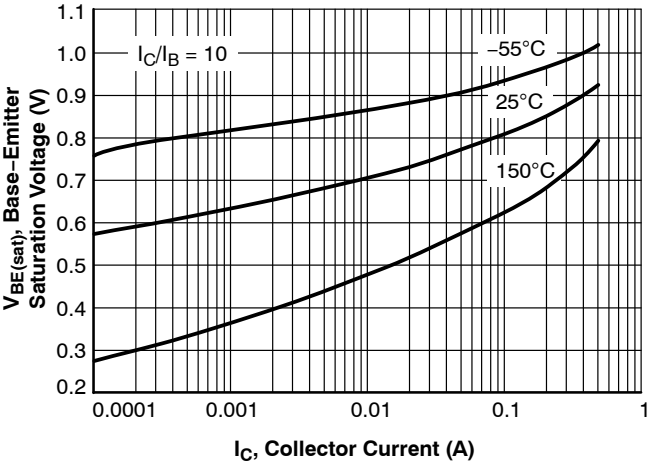

Figure 5. Base Emitter Saturation Voltage vs. Collector Current

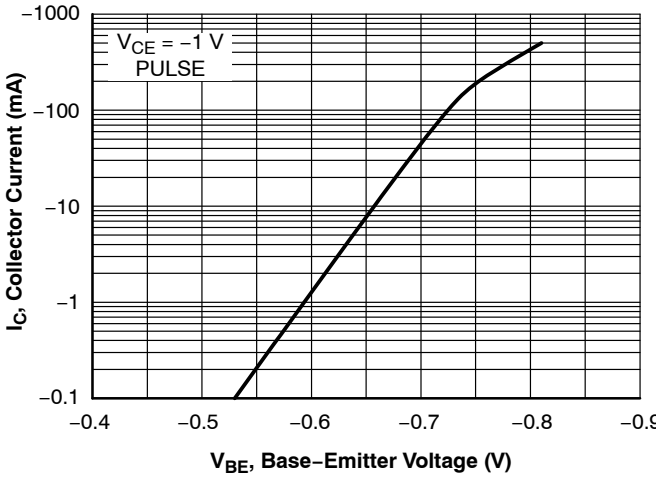

Figure 6. Base−Emitter On Voltage

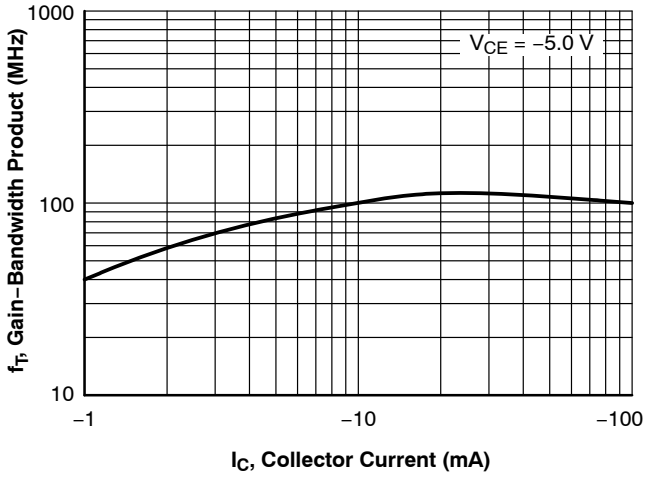

Figure 7. Gain Bandwidth Product

Share Feedback
Your Opinion Matters

Downloaded from Arrow.com.

TO−92 3 4.825x4.76
CASE 135AN
ISSUE O

DATE 31 JUL 2016

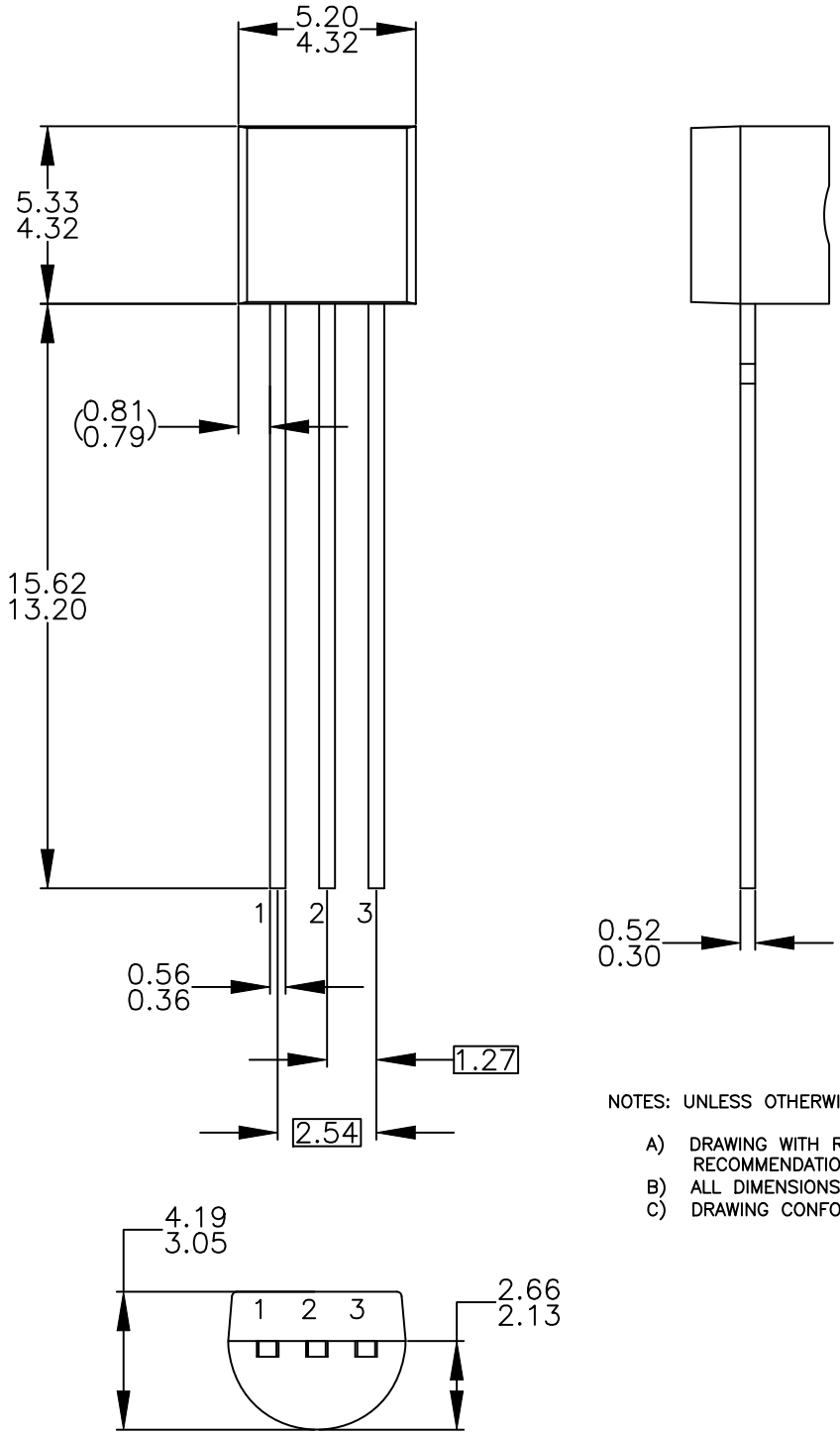

NOTES: UNLESS OTHERWISE SPECIFIED

A) DRAWING WITH REFERENCE TO JEDEC TO−92 RECOMMENDATIONS.
B) ALL DIMENSIONS ARE IN MILLIMETERS.
C) DRAWING CONFORMS TO ASME Y14.5M−2009.

DOCUMENT NUMBER:	**98AON13880G**	Electronic versions are uncontrolled except when accessed directly from the Document Repository. Printed versions are uncontrolled except when stamped "CONTROLLED COPY" in red.	
DESCRIPTION:	**TO−92 3 4.825X4.76**		**PAGE 1 OF 1**

onsemi and onsemi are trademarks of Semiconductor Components Industries, LLC dba **onsemi** or its subsidiaries in the United States and/or other countries. **onsemi** reserves the right to make changes without further notice to any products herein. **onsemi** makes no warranty, representation or guarantee regarding the suitability of its products for any particular purpose, nor does **onsemi** assume any liability arising out of the application or use of any product or circuit, and specifically disclaims any and all liability, including without limitation special, consequential or incidental damages. **onsemi** does not convey any license under its patent rights nor the rights of others.

Downloaded from Arrow.com.

TO−92 3 4.83x4.76 LEADFORMED
CASE 135AR
ISSUE O

DATE 30 SEP 2016

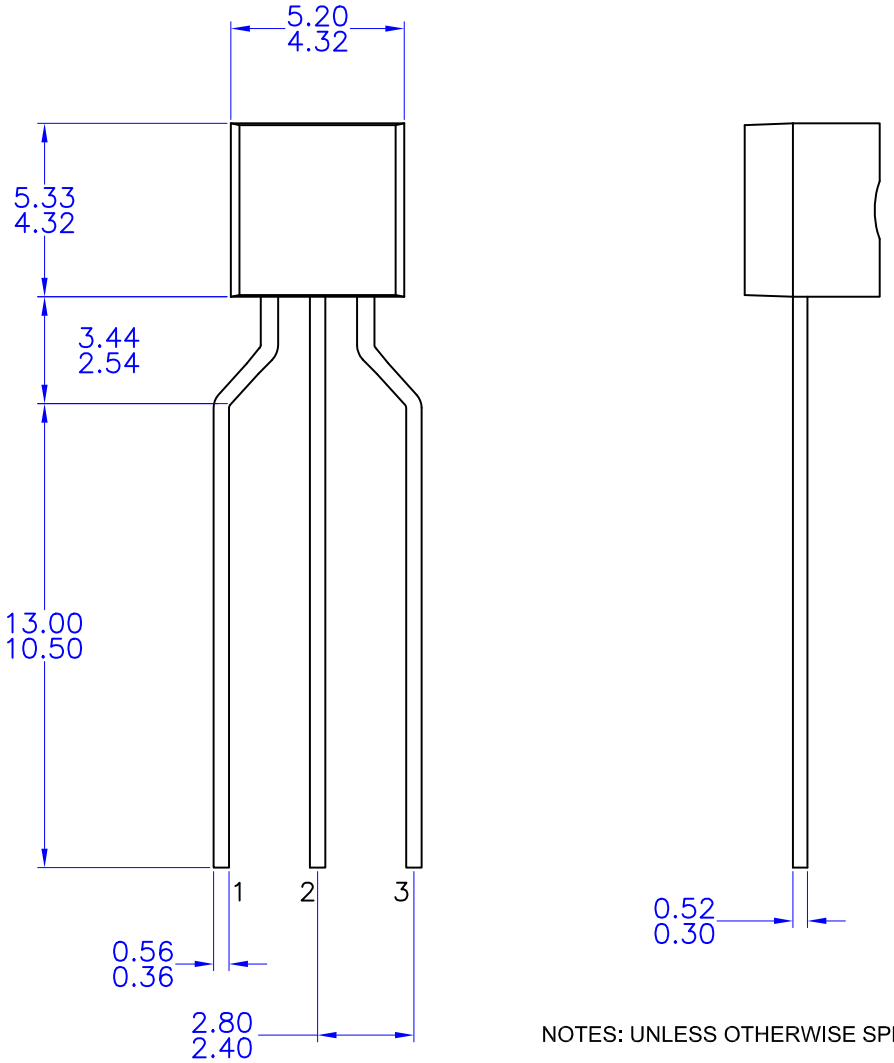

NOTES: UNLESS OTHERWISE SPECIFIED

A) DRAWING WITH REFERENCE TO JEDEC TO-92 RECOMMENDATIONS.
B) ALL DIMENSIONS ARE IN MILLIMETERS.
C) DRAWING CONFORMS TO ASME Y14.5M-1994

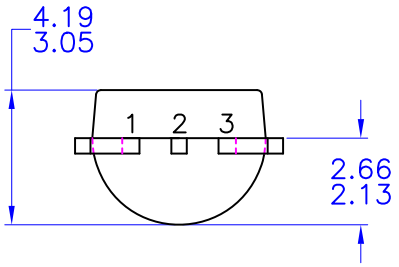

DOCUMENT NUMBER:	**98AON13879G**	Electronic versions are uncontrolled except when accessed directly from the Document Repository. Printed versions are uncontrolled except when stamped "CONTROLLED COPY" in red.
DESCRIPTION:	**TO−92 3 4.83X4.76 LEADFORMED**	**PAGE 1 OF 1**

onsemi and onsemi are trademarks of Semiconductor Components Industries, LLC dba **onsemi** or its subsidiaries in the United States and/or other countries. **onsemi** reserves the right to make changes without further notice to any products herein. **onsemi** makes no warranty, representation or guarantee regarding the suitability of its products for any particular purpose, nor does **onsemi** assume any liability arising out of the application or use of any product or circuit, and specifically disclaims any and all liability, including without limitation special, consequential or incidental damages. **onsemi** does not convey any license under its patent rights nor the rights of others.

Downloaded from Arrow.com.

onsemi, onsemi, and other names, marks, and brands are registered and/or common law trademarks of Semiconductor Components Industries, LLC dba "**onsemi**" or its affiliates and/or subsidiaries in the United States and/or other countries. **onsemi** owns the rights to a number of patents, trademarks, copyrights, trade secrets, and other intellectual property. A listing of **onsemi**'s product/patent coverage may be accessed at www.onsemi.com/site/pdf/Patent−Marking.pdf. **onsemi** reserves the right to make changes at any time to any products or information herein, without notice. The information herein is provided "as−is" and **onsemi** makes no warranty, representation or guarantee regarding the accuracy of the information, product features, availability, functionality, or suitability of its products for any particular purpose, nor does **onsemi** assume any liability arising out of the application or use of any product or circuit, and specifically disclaims any and all liability, including without limitation special, consequential or incidental damages. Buyer is responsible for its products and applications using **onsemi** products, including compliance with all laws, regulations and safety requirements or standards, regardless of any support or applications information provided by **onsemi**. "Typical" parameters which may be provided in **onsemi** data sheets and/or specifications can and do vary in different applications and actual performance may vary over time. All operating parameters, including "Typicals" must be validated for each customer application by customer's technical experts. **onsemi** does not convey any license under any of its intellectual property rights nor the rights of others. **onsemi** products are not designed, intended, or authorized for use as a critical component in life support systems or any FDA Class 3 medical devices or medical devices with a same or similar classification in a foreign jurisdiction or any devices intended for implantation in the human body. Should Buyer purchase or use **onsemi** products for any such unintended or unauthorized application, Buyer shall indemnify and hold **onsemi** and its officers, employees, subsidiaries, affiliates, and distributors harmless against all claims, costs, damages, and expenses, and reasonable attorney fees arising out of, directly or indirectly, any claim of personal injury or death associated with such unintended or unauthorized use, even if such claim alleges that **onsemi** was negligent regarding the design or manufacture of the part. **onsemi** is an Equal Opportunity/Affirmative Action Employer. This literature is subject to all applicable copyright laws and is not for resale in any manner.

ADDITIONAL INFORMATION

TECHNICAL PUBLICATIONS:
Technical Library: www.onsemi.com/design/resources/technical−documentation
onsemi Website: www.onsemi.com

ONLINE SUPPORT: www.onsemi.com/support
For additional information, please contact your local Sales Representative at www.onsemi.com/support/sales

Downloaded from Arrow.com.