Amphenol Socapex

Tri-Start **TV-CTV**

MIL-DTL-38999 Series III

EN3645 subminiature cylindrical connectors

High performance threaded cylindrical connectors

www.38999-solutions.com

Downloaded from Arrow.com.

ABOUT AMPHENOL

Amphenol is one of the largest manufacturers of interconnect products in the world. The Company designs, manufactures and markets electrical, electronic and fiber optic connectors, coaxial and flat-ribbon cable, and interconnect systems.

The primary end markets for the Company's products are communications and information processing markets, including cable television, cellular telephone and data communication and information processing systems; aerospace and military electronics; and automotive, rail and other transportation and industrial applications.

ABOUT AMPHENOL SOCAPEX

Amphenol Socapex is part of Amphenol Corporate. The company has subsidiaries in France, India, China, and in the United States. Amphenol Socapex is a market leader of MIL-DTL-38999 and derived products, high density board level connectors, field bus and rugged Ethernet solutions, harsh environment optical connectors, MIL-DTL-26482 Series I rugged industrial solutions and EN2997 connectors.

Amphenol Socapex is able to meet customer satisfaction through:

- Agile & Lean Organization
- Global Sourcing
- State-of-the-Art Manufacturing
- Custom design capability
- Competitive Independent Workshops

AMPHENOL SOCAPEX QUALITY & ENVIRONMENTAL CERTIFICATION

Quality certification :
ISO 9001 : 2000
Thyez (France) and Pune (India)

Aeronautical market quality certification :
EN9100 : 2003
Thyez (France) and Pune (India)

Military market quality certification (NATO) :
AQAP 2110
Thyez (France)

Environnemental certification :
ISO 14001 (2004)
Thyez (France)

Downloaded from Arrow.com.

TABLE OF CONTENTS

GENERAL CHARACTERISTICS 4
TECHNICAL CHARACTERISTICS
- Mechanical characteristics 5
- Environmental characteristics 6
- Electrical characteristics 7
- Insert arrangements 8
- Coding – Polarization 13

CTV COMPOSITE SHELLS
- Presentation 14
- Overall dimensions 14

TV METALLIC SHELLS
- Aluminium shells presentation 16
- Bronze shells presentation 16
- Stainless steel shells presentation 16
- Overall dimensions 17

PANEL DRILLING FOR COMPOSITE AND METALLIC RECEPTACLES 18
STAND OFF RECEPTACLE 19
PRINTED CIRCUIT BOARD DRILLING 20
TVS-Y/TVS-YN HERMETIC RECEPTACLES
- Presentation 23
- Overall dimensions 23

BREAKAWAY CONNECTORS - LANYARD RELEASE PLUGS
- Presentation 25
- Overall dimensions 25

THRU-BULKHEAD RECECTACLES 27
RECEPTACLES WITH ENHANCED SEALING 27
INTEGRATED BACKSHELLS 28
MIL-DTL-38999 SERIES III OPTICAL CONNECTORS 28
PROTECTION CAPS 29
ACCESSORIES
- Dummy receptacles 30
- Holding support 30
- Plastic dust caps 30
- Crimp contacts 31
- Piggy back grommets 31
- Sealing plugs 32
- Dummy contacts 32
- Standard PC tail contacts 32
- Reducing ferrules 33

APPLICATION TOOLS
- Crimping tools 34
- Insertion and removal tools 34

BACKSHELLS 35
HOW TO ORDER
- Composite and metallic versions 36
- Hermetic versions 38
- MIL-STD-1760 Lanyard release plugs 39
- Lanyard release plugs 40
- Cross references (Amphenol versus Mil references) 42

Downloaded from Arrow.com.

DESCRIPTION

The TV-CTV connectors are in accordance with MIL-DTL-38999 series III standard. These connectors offer the highest performance capabilities for both general duty and severe environment applications. Besides the most commonly used aluminium shell, different shell materials are available:

- The composite connector is a lightweight (17 to 70 % weight savings), corrosion resistant *(withstanding 2000 hours of salt spray exposure)* connector
- The nickel aluminium bronze connector offers a high corrosion resistance and robustness for marine applications
- The stainless steel connector provides a firewall capability

The Amphenol TV connectors range also offers the following options:

- Inserts compatible with size 8 quadrax
- Ground Plane version with a conductive insert for specific use with coaxial, triaxial or quadrax contacts.
- Receptacles with reinforced sealing
- Hermetic version in Y and N classes
- Filtered versions using tubular or planar technology (please consult us)
- High density inserts with size 23 contacts

MAIN FEATURES

Shell material
- Composite
- Aluminium
- Marine bronze (no finish)
- Stainless steel

Finish
- Olive drab cadmium plating
- Nickel plating
- Passivation (for steel versions
- Cadmium free platings available on request (Nickel-PTFE)

Contacts
- More than 80 contact arrangements including high density and power versions
- Size 00,4, 8, 10, 12, 16, 20, 22D, 23 contacts (standard contacts are plated 1.27 µm minimum gold)
- Signal, power, twinax, coaxial, quadrax contacts, optical termini

Contact protection
- 100% scoop-proof shell
- Interfacial seal ensures sealing around each contact and prevents electrolytic erosion

EMI/RFI protection
- Shell to shell bottoming
- Grounding fingers on the plug shell

9 shell sizes from 09 to 25

Quick coupling
- completely mates and self locks in a 360° turn of the coupling nut
- Anti-decoupling device allows high vibration performance
- Receptacles are intermountable with MIL-DTL-38999 series I standard (same panel drilling)

ADDITIONAL INFORMATION

Amphenol Socapex offer a global solution: besides the TV-CTV wide range of connectors, the following products are available *(please consult data sheets)*:

- Backshells *(refer to data sheet E118)*
- FTV filtered connectors *(refer to data sheet 12-120)*
- Contacts *(refer to data sheet DOC- 000030 -ANG)*

APPLICATIONS

Military and aeronautic applications:
battlefield, ground vehicles, aircrafts, communication systems…

Advanced industrial applications:
high vibration requirements, high density

Downloaded from Arrow.com.

MECHANICAL CHARACTERISTICS

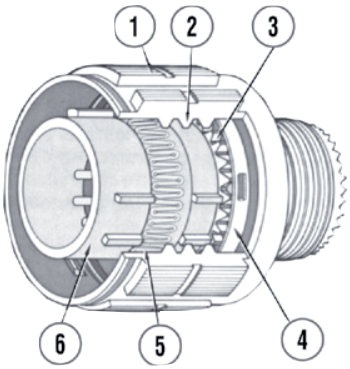

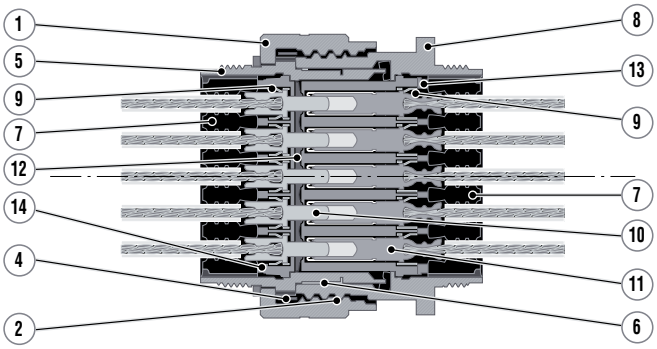

1 Coupling nut
2 Quick coupling thread
3 Ratchet
4 Anti decoupling device
5 Plug shell
6 Spring fingers (EMI)
7 Grommet
8 Receptacle shell
9 Contact retention clips
10 Crimping pin contact
11 Crimping socket contact
12 Interfacial seal
13 Socket insert
14 Pin insert

- Thermoplastic insert
- Silicone rubber back insert and interfacial seal
- **Durability:** - 500 cycles
  - 1500 cycles with composite connector " CTV " fitted with " H " and " J " contact types
- **Shocks:** half sine wave of 300 G magnitude during 3ms per EIA364.27
- **Sine vibrations:** - 60 g from - 55°C to + 175°C (olive drab cadmium finish)
  - 60 g from - 55°C to +200°C (nickel finish and firewall version)
- **Random vibrations per EIA364.28:** - 1 G^2 / Hz at 175°C olive drab cadmium finish
  - 1G^2 / Hz at 200°C nickel finish and firewall version
  - 5G^2 / Hz at ambient
- **Bending moment**

Shell size		Bending moment Nm
MIL-DTL-38999 Series III	Amphenol	
A	09	11.3
B	11	33.9
C	13	45.2
D	15	56.5
E	17	67.8
F	19	79.1
G	21	90.4
H	23	101.7
J	25	113.0

- **Contact retention force**

Contact Size	23	22D	20	16	12	8	4
Maximum load (N)	44	44	67	110	110	150	150

Downloaded from Arrow.com.

ENVIRONMENTAL CHARACTERISTICS

• **Salt spray exposure and working temperature:**

• **Waterproof shells**

Shell material	Shell finish	Salt spray exposure per EIA364.26	Class norm	Amphenol	Operating temperature	
					mini	maxi
Composite	Electroless Nickel O.D cadmium	2000 H 2000 H	M J	CTV-RF CTV-RW	-65°C -65°C	+200°C +175°C
Aluminium	Electroless Nickel O.D cadmium Durmalon (Ni-PTFE)	48 H 500 H 500H	F W T	TVS-RF TV-RW TV-DT	-65°C -65°C -65°C	+200°C +175°C +175°C
Stainless steel	Nickel —	500 H 500 H	S K	TVS-RS TVS-RK	-65°C -65°C	+200°C +200°C
Bronze	—	500 H		TVS-RB	-65°C	+200°C

• **Hermetic shells**

Shell materiel	Shell finish	Salt spray exposure per EIA364.26	Class norm	Amphenol	Operating temperature	
					min	max
Stainless steel	Nickel -	48 H 500 H	N Y	TVS-YN TVS-Y	-65°C -65°C	+200°C +200°C

• **Humidity:** per MIL-DTL-38999: § 3.29
• **Altitude immersion:** according to MIL-DTL-38999 III standard (except hermetics)
• **Air leakage** < 1.10^{-7} cm^3/s under 1 bar of differential pressure (hermetics only)

• **Fluid immersion per EIA364.10:**

- Hydraulic fluid, per MIL-H-5606
- Turbine fluid, grade JP-8, per MIL-DTL-83133 (NATO TYPE 34)
- Lubricating oil, per MIL-L-7808
- Lubricating oil, per MIL-PRF-23699
- Defrosting fluid, per MIL-A-8243
- Cleaning compound, diluted for cleaning, per MIL-PRF-87937 type I alkaline base
- Gasoline, per ASTM-D-4814
- Gasohol, per A-A-52530
- One part isopropyl alcohol, per TT-I-735, grade A or B ; and 3 parts mineral spirits, per A-A-2904, type II, grade A or P-D-680, type I, by volume
- Coolant, dielectric fluid, synthetic silicate ester base MIL-PRF-47220 (Coolanol 25) or equivalent
- Hydraulic fluid M2-V Chevron oil ST0145LB0001 or equivalent

Downloaded from Arrow.com.

ELECTRICAL CHARACTERISTICS

• Contact rating - nominal current per contact

Contact size	23	22 D	20	16	12	8	4	00
Crimp (A)	5	5	7.5	13	23	60	100	230
Hermetic (A)	3	3	5	10	17	-	-	-
PC Tail (A)	3	3	4.5	10	17	40	-	-

• Contact resistance

Contact Size	23	22D	20	16	12	8	4
Resistance (mΩ)	15	8	4.7	2	1.1	0.6	0.26

• Insulation resistance
- at ambiant > 10^5 Mohms
- at maximum temperature > 10^3 Mohms

• Service rating

Service	Dielectric withstanding voltage (Vrms)								Working voltage	
	At sea level		15000 meters		21000 meters		34000 meters			
	mated	unmated	mated	unmated	mated	unmated	mated	unmated	Vrms	Vdc
M	1300	1300	800	550	800	350	800	200	400	550
I	1800	1800	1000	600	1000	400	1000	200	600	850
II	2300	2300	1000	800	1000	500	1000	200	900	1250

• Dimensions of acceptable contacts and cables

Contact Size	Contact Diameter mm	Crimp barrel		Acceptable cables						
		Diameter mm	Depth mm	Gauge AWG Section mm²				Outside diameter (mm)		
								Min	Average	Max
23	0,68	0,88 ± 0,03	3,81	22 0.38	24 0.22	26 0.15	28 0.095	-	-	1.2
22D	0.76	0.88 ± 0.03	3.58	22 0.38	24 0.22	26 0.15	28 0.095	0.76	1.20	1.37
20	1	1.19 ± 0.03	5.30	20 0.60	22 0.38	24 0.22	- -	1.02	1.83	2.11
16	1.57	1.70 ± 0.03	5.30	16 1.34	18 0.93	20 0.60	- -	1.68	2.41	2.77
12	2.36	2.54 ± 0.06	10	12 3.30	14 1.94	- -	- -	2.46	3.20	3.61
8	3.60	4.6 ± 0.05	10	8 8.98 Max acceptable: 10mm²				4.50	-	5.8
4	5.70	7.4 ± 0.05	12	4 21.10				7.73	-	8.4

Downloaded from Arrow.com.

INSERT ARRANGEMENTS

Contact Size	23	22D	20	16	12	8	4
Caption	●	◐	⊖	⊕	◒	◉	○

Front face of male insert. (Only the major keyway is illustrated)

1. MIL-DTL-38999 Series III / EN3645 insert arrangement reference
2. TV-CTV insert arrangement
3. Service class
4. Number of contacts
5. Contact sizes

09

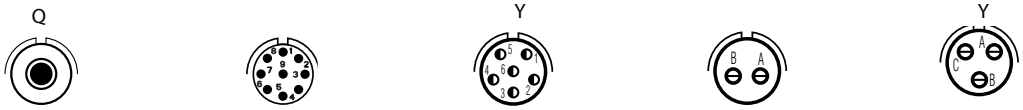

1	- / 09G01		A 35 / 09N35		A 98 / 09N98
2	09-05	09-09	09-35	09-94	09-98
3			M	M	I
4	1	9	6	2	3
5	8 Twinax°	23	22D	20	20

11

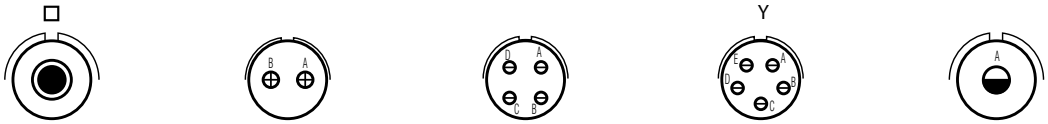

1	- / 11N01	B 2 / 11N02	- / 11N04	B 5 / 11N05	- / 11N12
2	11-01	11-02	11-04	11-05	11-12
3		I	I	I	
4	1	2	4	5	1
5	8 Twinax°	16	20	20	12

11

1		B 35 / 11N35	B 98 / 11N98	B99 / 11N99
2	11-19	11-35	11-98	11-99
3		M	I	I
4	19	13	6	7
5	23	22D	20	20

13

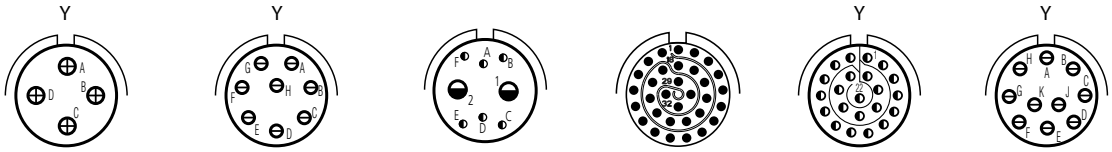

1	C 4 / 13N04	C 8 / 13N08	- / 13N26		C 35 / 13N35	C 98 / 13N98
2	13-04	13-08	13-26	13-32	13-35	13-98
3	I	I	M		M	I
4	4	8	6 2	32	22	10
5	16	20	22D 12	23	22D	20

15

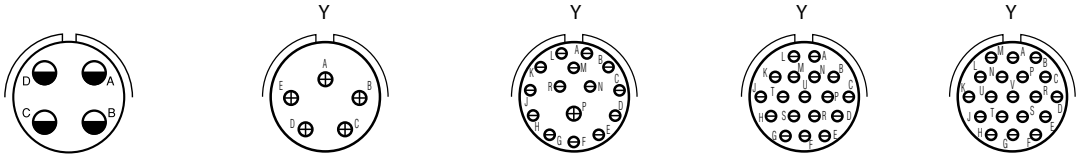

1		D 05 / 15N05	D 15 / 15N15	D 18 / 15N18	D 19 / 15N19
2	15-04	15-05	15-15	15-18	15-19
3	I	M	I	I	I
4	4	5	14 1	18	19
5	12	16	20 16	20	20

FOR COMMENTS, PLEASE SEE PAGE 11

Downloaded from Arrow.com.

INSERT ARRANGEMENTS

Front face of male insert. (Only the major keyway is illustrated)

Contact Size	23	22D	20	16	12	8	4
Caption	●	◐	⊖	⊕	◒	◉	○

1. MIL-DTL-38999 Series III / EN3645 insert arrangement reference
2. TV-CTV insert arrangement
3. Service class
4. Number of contacts
5. Contact sizes

15

1			D 35 / 15N35		D 97 / 15N97	
2	15-25**		15-35	15-55	15-97	
3	M		M		I	
4	22	3	37	55	8	4
5	22D	16	22D	23	20	16

17

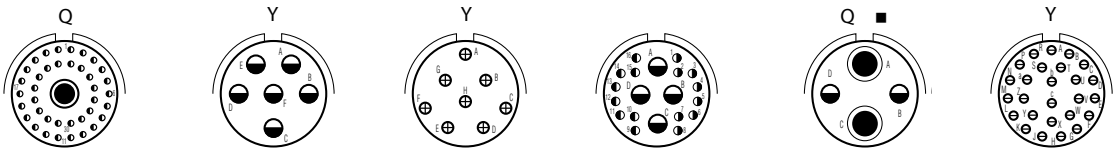

1	E 2 / 17N02		E 6 / 17N06	E 8 / 17N08	- / 17N20		- / 17N22		E 26 / 17N26
2	17-02		17-06	17-08	17-20**		17-22		17-26
3	M		I	II	M		M		I
4	38	1	6	8	16	4	2	2	26
5	22D	8 Twinax°	12	16	22D	12	12 Coax	8 Twinax^	20

17

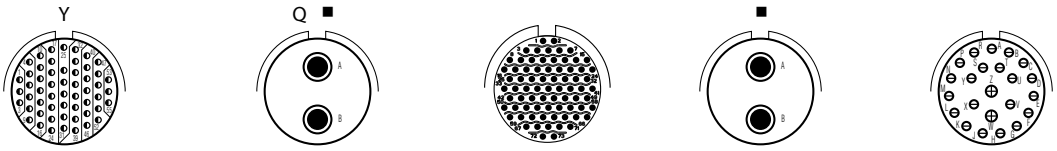

1	E 35 / 17N35			- / 17N75	E 99 / 17N99
2	17-35	17-52	17-73	17-75	17-99
3	M				I
4	55	2	73	2	21 2
5	22D	8 Quadrax (meets 17-82 Boeing spec)	23	8 Twinax°	20 16

19

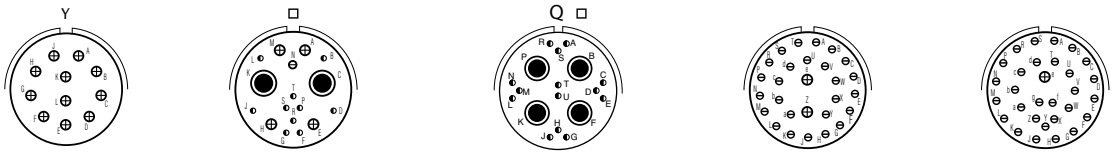

1	F 11 / 19N11	- / 19N17				F 18				
2	19-11	19-17				19-18		19-28		19-30
3	II	M				M		I		I
4	11	10	1	4	2	14	4	26	2	29 1
5	16	22D	20	16	8 Twinax^	22D	8 Twinax°	20	16	20 16

19

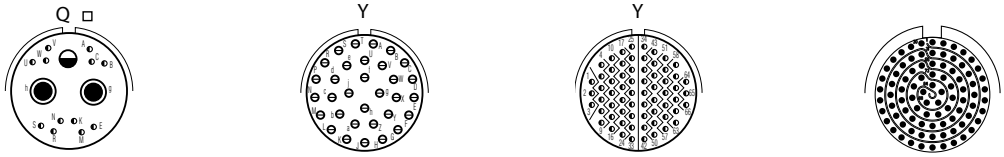

1	- / 19N31			F 32 / 19N32	F 35 / 19N35	
2	19-31			19-32	19-35	19-88
3	M			I	M	I
4	2	1	12	32	66	88
5	8 Coax	12	22D	20	22D	23

FOR COMMENTS, PLEASE SEE PAGE 11

Downloaded from Arrow.com.

INSERT ARRANGEMENTS

Front face of male insert. (Only the major keyway is illustrated)

Contact Size	23	22D	20	16	12	8	4
Caption	●	◐	⊖	⊕	◒	◉	○

1. MIL-DTL-38999 Series III / EN3645 insert arrangement reference
2. TV-CTV insert arrangement
3. Service class
4. Number of contacts
5. Contact sizes

21

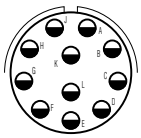
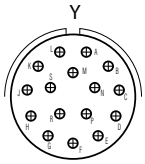
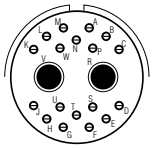
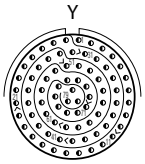
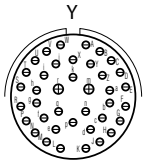

1	G 11 / 21N11	G 16 / 21N16	- / 21N20	G 35 / 21N35	G 39 / 21N39
2	21-11	21-16	21-AJ	21-35	21-39
3	I	II	M	M	I
4	11	16	18 2	79	37 2
5	12	16	20 8 twinax[A]	22D	20 16

21

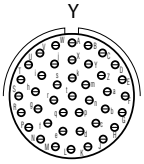
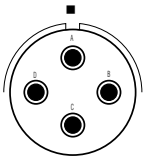
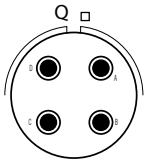
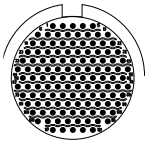

1	G 41 / 21N41		G 75 / 21N75	
2	21-41	21-48	21-75	21-121
3	I	M	M	
4	41	4	4	121
5	20	8 power	8 coax or 8 twinax*	23

23

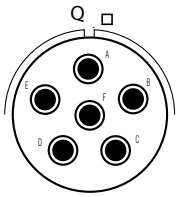
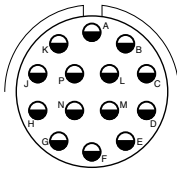
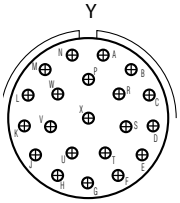
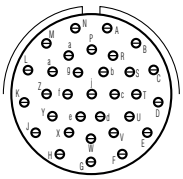
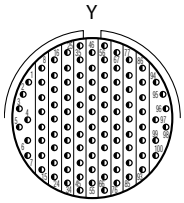

1	- / 23N06		H 21 / 23N21		H 35 / 23N35
2	23-06	23-14	23-21	23-32	23-35
3	M	I	II	I	M
4	6	14	21	32	100
5	8 twinax°	12	16	20	22D

23

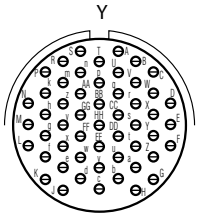
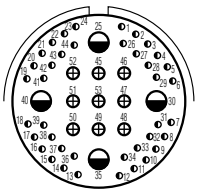
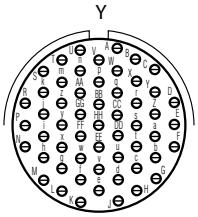
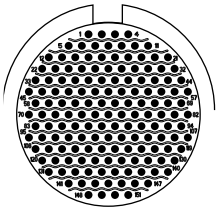

1	H 53 / 23N53	- / 23N54			H 55 / 23N55	
2	23-53	23-54			23-55	23-151
3	I	M			I	
4	53	40	9	4	55	151
5	20	22D	16	12	20	23

FOR COMMENTS, PLEASE SEE PAGE 11

Downloaded from Arrow.com.

INSERT ARRANGEMENTS

Front face of male insert. (Only the major keyway is illustrated)

Contact Size	23	22D	20	16	12	8	4
Caption	●	◐	⊖	⊕	◒	◉	○

1. MIL-DTL-38999 Series III / EN3645 insert arrangement reference
2. TV-CTV insert arrangement
3. Service class
4. Number of contacts
5. Contact sizes

25

Y | Q □ | Q ■

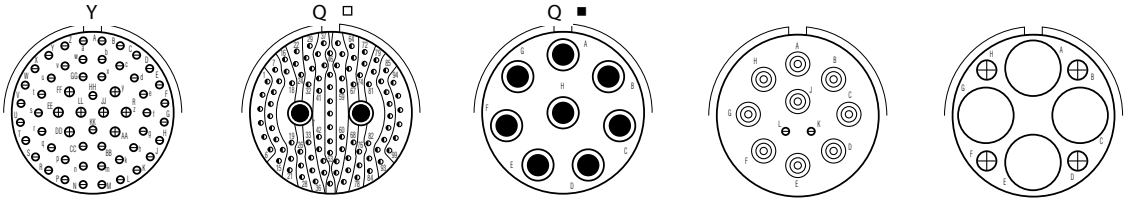

1	J 4 / 25N04		J 7 / 25N07		J 8 / 25N08	J 11 / 25N11				
2	25-04		25-07		25-08	25-11***			25-1A	
3	I		M			N			I	
4	48	8	97	2	8	2	9		4	4
5	20	16	22D	8 Twinax°	8 twinax$^{\Delta}$	20	10 power		16	4 power

25

Q ■ | Y | Q □ | ■

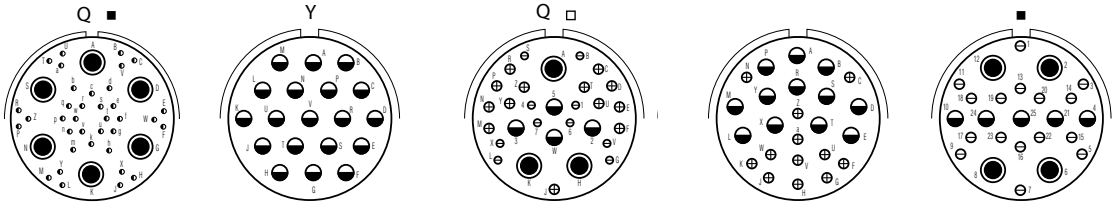

1	- / 25L17		J 19 / 25N19	J 20 / 25N20				J 24 / 25N24		- / 25N26		
2	25-17		25-19	25-20***				25-24		25-26		
3	M		I	N				I		I		
4	36	6	19	10	13	3	4	12	12	16	5	4
5	22D	8 twinax°	12	20	16	8 twinax°	12 coax	16	12	20	12	8 coax

25

Y | □

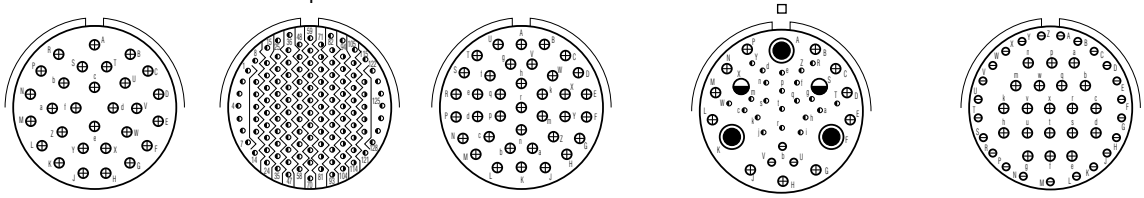

1	J 29 / 25N29	J 35 / 25N35	J 37 / 25N37						J 43 / 25N43	
2	25-29	25-35	25-37	25-41					25-43	
3	I	M	I	I					I	
4	29	128	37	22	3	11	2	2	23	20
5	16	22D	16	22D	20	16	12 coax	8 twinax°	20	16

25

Q ■ | Y

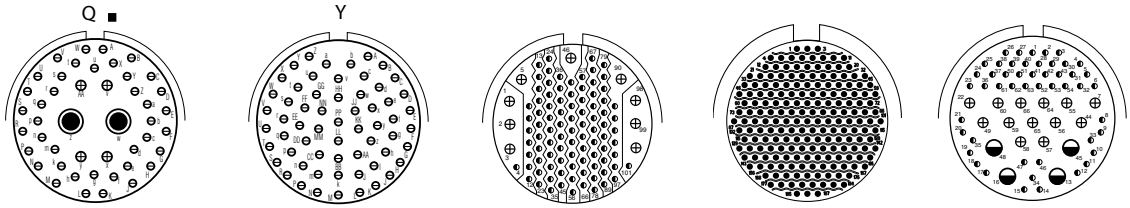

1	J 46 / 25N46			J 61 / 25N61						
2	25-46			25-61	25-92**		25-187	25-F4		
3	I			I	M			Size 22D=M, Balance =I		
4	40	4	2	61	92	9	187	49	13	4
5	20	16	8 coax	20	22D	16	23	22D	16	12

*	Military P/N delivered with 8 twinax and proprietary P/N delivered with size 8 coaxial contacts for RG 180 and RG 195 wire.
**	Not available in composite version.
***	For MIL STD 1760 application.
Y	Available in hermetic version.
Q	Insert with size 8 cavities compatible with Quadrax contacts or differential twinax contacts if mentioned in the part-number (see ordering information).
○	Delivered with twinax contacts for simple braid cable (M17/1760002, AECMA Pr EN 3375 - 003, Raychem 10612, EPD44690, EPD44691).
■	For information regarding the design of the grommet for size 8 contact (tower grommet, 3 webs, …) and the corresponding piggy back grommet, please consult us.
□	Tower grommet design for size 8 cavities, compatible with standard 900470, 900473… piggy back grommets.
Δ	Delivered with twinax contacts for double braid cable (PAN 6421, AECMA Pr EN 3375 - 004, Raychem 10613, EPD44692, EPD44693).

Downloaded from Arrow.com.

Arrangements		Service Class	Total number of contacts	Number and size of contacts											Grounded insert availability**		Quadrax available
CTV	TV			23	22D	20	16	12	12 coax	10 power	8 power	8 coax	8 triax or twinax	4 power	P	S	
09-05*	09-05*		1										1		X	X	X
09-09	09-09		9	9													
09-35	09-35	M	6		6												
09-94	09-94	M	2			2											
09-98	09-98	I	3			3											
11-01	11-01		1										1				
11-02	11-02	I	2				2								X	X	
11-04	11-04	I	4			4											
11-05	11-05	I	5			5											
11-12	11-12	II	1					1									
11-19	11-19		19	19													
11-35	11-35	M	13		13												
11-98	11-98	I	6			6											
11-99	11-99	I	7			7											
13-04	13-04	I	4				4								X		
13-08	13-08	I	8			8											
13-26	13-26	M	8		6			2									
13-32	13-32		32	32													
13-35	13-35	M	22		22												
13-98	13-98	I	10			10											
15-04	15-04	I	4					4									
15-05	15-05	II	5				5								X		
15-15	15-15	I	15			14	1										
15-18	15-18	I	18			18											
15-19	15-19	I	19			19											
	15-25	M	25		22		3										
15-35	15-35	M	37		37												
15-55	15-55		55	55													
15-97	15-97	I	12			8	4										
17-02	17-02	M	39		38								1				X
17-06	17-06	I	6					6							X		
17-08	17-08	II	8				8								X	X	
	17-20	M	20		16			4									
17-22	17-22		4						2				2		X	X	X
17-26	17-26	I	26			26											
17-35	17-35	M	55		55												
17-52	17-52	1	2												X	X	X
17-73	17-73		73	73													
17-75	17-75	I	2										2				
17-99	17-99	I	23			21	2										
19-11	19-11	II	11				11								X	X	
19-17	19-17	M	17		10	1	4						2				
19-18	19-18	M	18		14								4				X
19-28	19-28	I	28			26	2										
19-30	19-30	I	30			29	1										
19-31	19-31	M	15		12			1				2					X
19-32	19-32	I	32			32											
19-35	19-35	M	66		66												
19-88	19-88		88	88													
21-11	21-11	I	11					11									
21-16	21-16	II	16				16								X		
21-AJ	21-AJ	M	20			18							2				
21-35	21-35	M	79		79												
21-39	21-39	I	39			37	2										
21-41	21-41	I	41			41											
21-48	21-48		4								4						
21-75°	21-75°	M	4									4	or 4		X	X	X
21-121	21-121		121	121													

Legend:

* Only grounded insert version available

** Grounded version *(metallic insert for use with coaxial, twinax or quadrax contacts, for receptacle only).*

° 21-75 delivered with TWINAX contacts when ordered under the Mil P/N

Downloaded from Arrow.com.

Arrangements		Service Class	Total number of contacts	Number and size of contacts											Grounded insert availability**		Quadrax available
CTV	TV			23	22D	20	16	12	12 coax	10 power	8 power	8 coax	8 triax or twinax	4 power	P	S	
23-06	23-06	M	6										6		X	X	X
23-14	23-14	I	14					14									
23-21	23-21	II	21				21								X	X	
23-32	23-32	I	32			32											
23-35	23-35	M	100		100												
23-53	23-53	I	53			53											
23-54	23-54	M	53		40		9	4									
23-55	23-55	I	55			55											
23-151	23-151		151	151													
25-04	25-04	I	56			48	8										
25-07	25-07	M	99		97								2				X
25-08	25-08	M	8										8		X	X	X
25-11***	25-11***	N	11			2				9							
25-1A	25-1A		8				4							4			
25-17	25-17	M	42		36								6				X
25-19	25-19	I	19					19							X		
25-20***	25-20***	N	30			10	13		4*				3				X
25-24	25-24	I	24				12	12									
25-26	25-26	I	25			16		5				4					
25-29	25-29	I	29				29								X		
25-35	25-35	M	128		128												
25-37	25-37	I	37				37										
25-41	25-41	I	41		22	3	11		2*				3				
25-43	25-43	I	43			23	20										
25-46	25-46	I	46			40	4					2					X
25-61	25-61	I	61			61											
	25-92	M	101		92		9										
25-187	25-187		187	187													
25-F4	25-F4	M	66		49		13	4									

Legend: ** Grounded version *(metallic insert for use with coaxial, twinax or quadraxcontacts, for receptacle only)*.
*** 25-11 and 25-20 arrangements used for interconnection per MIL-STD-1760

CODING - POLARIZATION

To avoid cross-plugging problems in applications requiring the use of more than one MIL-DTL-38999 III connector of the same size, alternate key-rotations are available as indicated in the accompanying chart. As shown in the diagram below, the secondary keys rotate clockwise from the major one.

In the reference system, the polarizationis shown by the letters N, A, B, C, D or E.

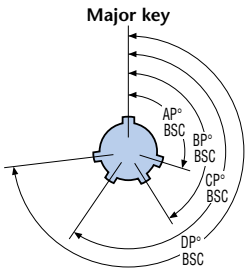

PLUG — Front face shown

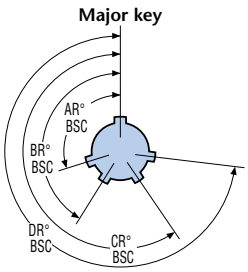

RECEPTACLE — Front face shown

Shell size	Coding identification letter	AR° or AP° BSC	BR° or BP° BSC	CR° or CP° BSC	DR° or DP° BSC
9	N	105	140	215	265
	A	102	132	248	320
	B	80	118	230	312
	C	35	140	205	275
	D	64	155	234	304
	E	91	131	197	240
11 13 and 15	N	95	141	208	236
	A	113	156	182	292
	B	90	145	195	252
	C	53	156	220	255
	D	119	146	176	298
	E	51	141	184	242
17 and 19	N	80	142	196	293
	A	135	170	200	310
	B	49	169	200	244
	C	66	140	200	257
	D	62	145	180	280
	E	79	153	197	272
21 23 and 25	N	80	142	196	293
	A	135	170	200	310
	B	49	169	200	244
	C	66	140	200	257
	D	62	145	180	280
	E	79	153	197	272

Downloaded from Arrow.com.

CTV COMPOSITE SHELLS

PRESENTATION

Qualified to MIL- DTL- 38999 standard, the Amphenol composite Tri-Start Connectors offers a lightweight corrosion resistant connector with the same high performance features as its metal counterpart.
It also includes the following features:

- Lightweight (20 - 40% weight savings vs. aluminium, 60 - 70% weight savings vs stainless steel)
- High Corrosion resistance
- Durability

Note: Coupling nuts and hexagonal nuts are delivered without plating (black)

MAIN CHARACTERISTICS

- Shell to shell continuity: Max resistance - Class M: 3 mΩ
  - Class J: 3 mΩ
- Durability: - 500 cycles with standards contacts
  - 1500 cycles with "H" type SAE AS39029 pin contacts and "J" type SAE AS39029 socket contacts
- Ozone exposure: MIL-DTL-38999 § 4.5.28 / EIA 364.14.
- Fungus resistance conforms to: MIL-STD-810, method 508.
- EMI shielding effectiveness: - 1 GHz: -85 dB (Class M, J)
  - 10 GHz: -65 dB (Class M), -50 dB (Class J)

OVERALL DIMENSIONS - COMPOSITE VERSIONS

CTVP00RW JD38999/20J
CTVPS00RF JD38999/20M
Square flange receptacle

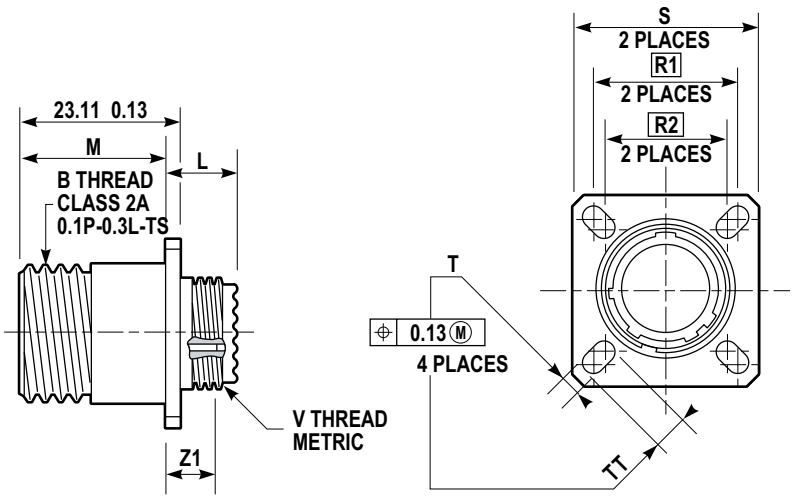

Shell size		B Thread (inches)	L Max (mm)	M +0.00 -0.13 (mm)	R1 (mm)	R2 (mm)	S ±0.25 (mm)	T +0.20 -0.13 (mm)	Z1 Max (mm)	TT +0.20 -0.13 (mm)	V thread metric
MIL-DTL-38999 Series III	Amphenol										
A	9	.6250	13.055	19.685	18.26	15.09	23.83	3.25	5.03	5.49	M12x1-6g
B	11	.7500	13.055	19.685	20.62	18.26	26.19	3.25	5.03	4.93	M15x1-6g
C	13	.8750	13.055	19.685	23.01	20.62	28.58	3.25	5.03	4.93	M18x1-6g
D	15	1.0000	13.055	19.685	24.61	23.01	30.96	3.25	5.03	4.39	M22x1-6g
E	17	1.1875	13.055	19.685	26.97	24.61	33.32	3.25	5.03	4.93	M25x1-6g
F	19	1.2500	13.055	19.685	29.36	26.97	36.53	3.25	5.03	4.93	M28x1-6g
G	21	1.3750	13.843	18.923	31.75	29.36	39.67	3.25	5.79	4.93	M31x1-6g
H	23	1.5000	13.843	18.923	34.93	31.75	42.88	3.91	5.79	6.15	M34x1-6g
J	25	1.6250	13.843	18.923	38.10	34.93	46.02	3.91	5.79	6.15	M37x1-6g

For panel drilling, refer to page 18
For PCB contacts stickout, refer to page 22
Maximum panel thickness for rear panel mounting: 5,94mm from size 9 to 19
5,18mm from size 21 to 25

Downloaded from Arrow.com.

CTV07 RW JD38999/24J
CTVS07 RF JD38999/24M
Jam nut receptacle

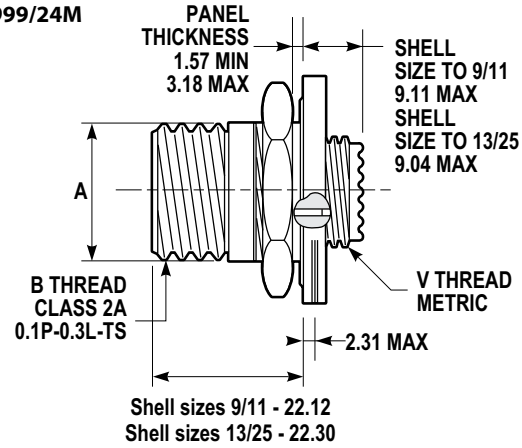

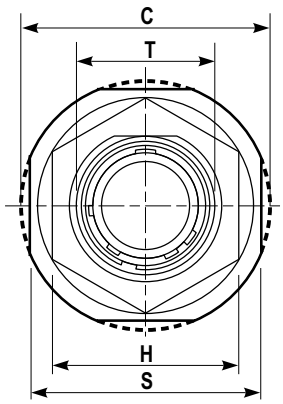

Shell size		A +0.00 -0.25 (mm)	B Thread (inches)	C Max (mm)	H Hex +0.43 -0.41 (mm)	S +0.28 -0.25 (mm)	T +0.25 -0.00 (mm)	V thread metric	Hex nut max torque N.m
MIL-DTL-38999 Series III	Amphenol								
A	9	16.99	.6250	30.45	22.23	26.97	17.70	M12x1-6g	4.1
B	11	19.53	.7500	35.20	25.40	31.75	20.88	M15x1-6g	5.3
C	13	24.26	.8750	38.38	30.17	34.92	25.58	M18x1-6g	6.9
D	15	27.53	1.0000	41.55	33.32	38.10	28.80	M22x1-6g	8.6
E	17	30.68	1.1875	44.73	36.52	41.28	31.98	M25x1-6g	9.8
F	19	33.86	1.2500	49.50	39.67	46.02	35.15	M28x1-6g	10.9
G	21	37.06	1.3750	52.65	42.87	49.22	38.28	M31x1-6g	12.7
H	23	40.00	1.5000	55.85	46.02	52.37	41.50	M34x1-6g	13.8
J	25	43.41	1.6250	59.00	50.80	55.57	44.68	M37x1-6g	15

For panel drilling, please refer to page 18
For PCB contacts stickout, please refer to page 22

CTV06 RW JD38999/26J
CTVS06 RF JD38999/26M
Straight plug

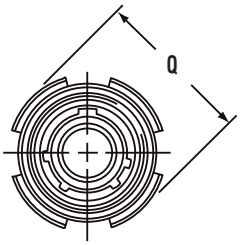

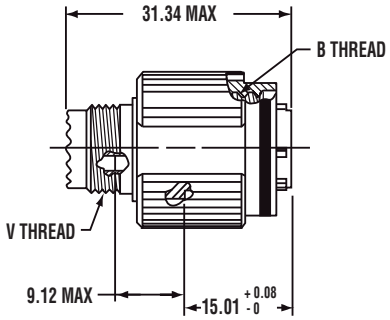

Shell size		B Thread 0.1P-0.3L-TS-2B (inches)	Q Max (mm)	V thread metric (mm)
MIL-DTL-38999 Series III	Amphenol			
A	9	.6250	21.82	M12x1-6g
B	11	.7500	24.99	M15x1-6g
C	13	.8750	29.39	M18x1-6g
D	15	1.0000	32.49	M22x1-6g
E	17	1.1875	35.69	M25x1-6g
F	19	1.2500	38.48	M28x1-6g
G	21	1.3750	41.68	M31x1-6g
H	23	1.5000	44.88	M34x1-6g
J	25	1.6250	47.98	M37x1-6g

Downloaded from Arrow.com.

TV METALLIC SHELLS

TVS-F / TV-W ALUMINIUM SHELLS

Presentation

Aluminium TV shell connectors are used in professional and international electronic defense programs in standard environmental conditions.

Main characteristics

• Material shell: Aluminium alloy.

• Shell to shell continuity: Max resistance - 1 mΩ for F class
- 2.5 mΩ for W class

• Shell to contact continuity, for grounded inserts versions: Max resistance 10 mΩ

• EMI shielding effectiveness: - 1GHz: -85 dB (Class F, W)
- 10 GHz: -65 dB (Class F); -50 dB (Class W)

• Standard MIL wiring tools

TVS-B MARINE BRONZE SHELLS

Presentation

TVS-B bronze connectors are not defined in MIL-DTL-38999-III standard but they are based on its requirements.

TVS-B connectors conform to the European standard CECC 75.201.002. (deviation F485 to be added for plug)

This series was initially selected by the British Navy for a new generation of ships. By extension a lot of the NATO Navy choose this series as a standard of interconnection.

Main characteristics

• Material shell: Nickel aluminum bronze DGS 1043.

• EMI shielding effectiveness: < -65 dB from 100 MHz to 10 GHz.

TVS-K / TVS-S STAINLESS STEEL SHELLS

Presentation

Stainless steel shell connectors are used in high temperature environments and in harsh vibration conditions. They provide FIREWALL capabilities.

Main characteristics

• Thermosetting insert

• Shell to shell continuity: Max resistance - 10 mΩ for Class K
- 1 mΩ for Class S

• EMI shielding effectiveness: - 1 GHz: -65 dB (Class K); -85 dB (Class S)
- 10 GHz: -45 dB (ClassK); -65 dB (Class S)

Downloaded from Arrow.com.

OVERALL DIMENSIONS / METALLIC VERSIONS

TVP00RW **JD38999/20W**
TVPS00RF **JD38999/20F**
TVPS00RB
TVPS00RK **JD38999/20K**
TVPS00RS **JD38999/20S**
Square flange receptacle

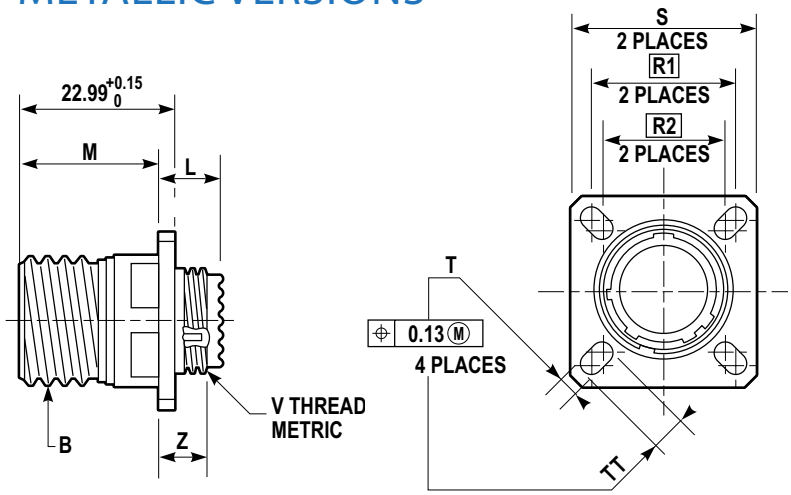

Shell size		B thread Class 2A 0.1P-0.3L-TS (inches)	L Max (mm)	M +0.00 -0.13 (mm)	R1 (mm)	R2 (mm)	S ±0.25 (mm)	T +0.20 -0.13 (mm)	Z1 Max (mm)	TT +0.20 -0.13 (mm)	V thread metric
MIL-DTL-38999 Series III	Amphenol										
A	9	.6250	11.91	20.83	18.26	15.09	23.83	3.25	3.89	5.49	M12x1-6g
B	11	.7500	11.91	20.83	20.62	18.26	26.19	3.25	3.89	4.93	M15x1-6g
C	13	.8750	11.91	20.83	23.01	20.62	28.58	3.25	3.89	4.93	M18x1-6g
D	15	1.0000	11.91	20.83	24.61	23.01	30.96	3.25	3.89	4.39	M22x1-6g
E	17	1.1875	11.91	20.83	26.97	24.61	33.32	3.25	3.89	4.93	M25x1-6g
F	19	1.2500	11.91	20.83	29.36	26.97	36.53	3.25	3.89	4.93	M28x1-6g
G	21	1.3750	12.70	20.07	31.75	29.36	39.67	3.25	4.65	4.93	M31x1-6g
H	23	1.5000	12.70	20.07	34.93	31.75	42.88	3.91	4.65	6.15	M34x1-6g
J	25	1.6250	12.70	20.07	38.10	34.93	46.02	3.91	4.65	6.15	M37x1-6g

For panel drilling, please refer to page 18
For PCB contacts stickout, please refer to page 22
Maximum panel thickness for rear panel mounting: 5,18mm from size 21 to 25
5,94mm from size 9 to 19

TV07RW **JD38999/24W**
TVS07RF **JD38999/24F**
TVS07RB
TVS07RK **JD38999/24K**
TVS07RS **JD38999/24S**
Jam nut receptacle

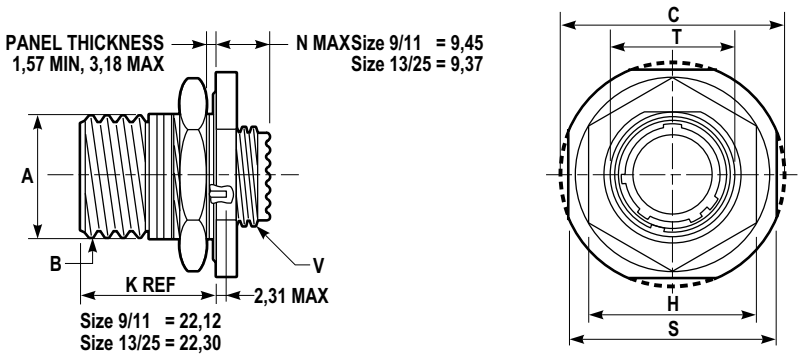

Shell size		B thread Class 2A 0.1P-0.3L-TS (inches)	A +0.00 -0.25 (mm)	C Max (mm)	H Hex +0.43 -0.41 (mm)	S +0.28 -0.25 (mm)	T +0.25 -0 (mm)	V thread metric	Hex nut max torque N.m
MIL-DTL-38999 Series III	Amphenol								
A	9	.6250	16.99	30.45	22.23	26.97	17.70	M12x1-6g	4.1
B	11	.7500	19.53	35.20	25.40	31.75	20.88	M15x1-6g	5.3
C	13	.8750	24.26	38.38	30.17	34.93	25.58	M18x1-6g	6.9
D	15	1.0000	27.53	41.55	33.32	38.10	28.80	M22x1-6g	8.6
E	17	1.1875	30.68	44.73	36.52	41.28	31.98	M25x1-6g	9.8
F	19	1.2500	33.86	49.50	39.67	46.02	35.15	M28x1-6g	10.9
G	21	1.3750	37.06	52.65	42.87	49.23	38.28	M31x1-6g	12.7
H	23	1.5000	40.00	55.85	46.02	52.37	41.50	M34x1-6g	13.8
J	25	1.6250	43.41	59.00	50.80	55.58	44.68	M37x1-6g	15

For panel drilling, please refer to page 18
For PCB contacts stickout, please refer to page 22

Downloaded from Arrow.com.

TV06RW **JD38999/26W**
TVS06RF **JD38999/26F**
TVS06RB
TVS06RK **JD38999/26K**
TVS06RS **JD38999/26S**
Straight plug

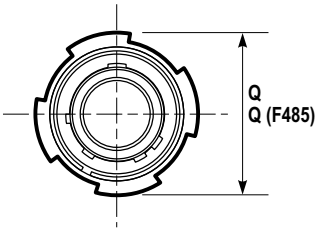

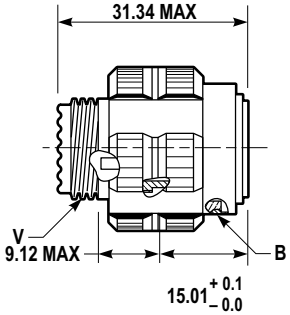

Shell size		B thread Class 2A 0.1P-0.3L-TS	Q Max (mm)	V thread metric (mm)	Q (F485)* (mm)
MIL-DTL-38999 Series III	Amphenol				
A	9	.6250	21.82	M12x1-6g	21.1
B	11	.7500	24.62	M15x1-6g	23.8
C	13	.8750	28.98	M18x1-6g	28.2
D	15	1.0000	32.16	M22x1-6g	31.4
E	17	1.1875	35.33	M25x1-6g	36.5
F	19	1.2500	38.10	M28x1-6g	39.3
G	21	1.3750	41.28	M31x1-6g	42.5
H	23	1.5000	44.45	M34x1-6g	45.3
J	25	1.6250	47.63	M37x1-6g	48.4

* Conforms to CECC 75.201.002 (coupling nut for arctic gloves)

PANEL DRILLING FOR COMPOSITE AND METALLIC RECEPTACLES

Square flange receptacle rear panel mounting

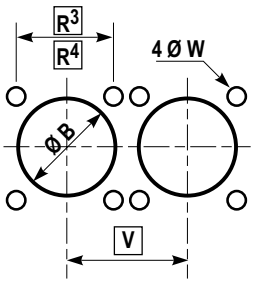

Square flange receptacle front panel mounting

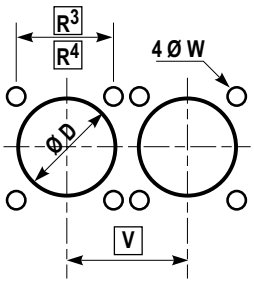

Jam nut receptacle rear panel mounting

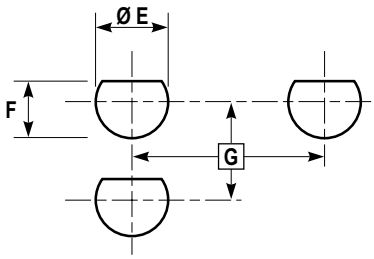

Shell size		R3 (mm)	R4 (mm)	V Mini (mm)	ØB Min (mm)	ØD Min (mm)	ØW +0 -0.25 (mm)	G Mini (mm)	ØE Mini (mm)	F +0 -0.25 (mm)
MIL-DTL-38999 Series III	Amphenol									
A	9	18.26	15.09	24.60	16.66	13.11	3.25	27.80	17.78	17.02
B	11	20.62	18.26	27.00	20.22	15.88	3.25	32.60	20.96	19.59
C	13	23.01	20.62	30.20	23.42	19.05	3.25	36.00	25.65	24.26
D	15	24.61	23.01	33.30	26.59	23.01	3.25	39.60	28.83	27.56
E	17	26.97	24.61	36.50	30.96	25.81	3.25	43.30	32.01	30.73
F	19	29.36	26.97	39.30	32.94	28.98	3.25	47.00	35.18	33.91
G	21	31.75	29.36	42.50	36.12	32.16	3.25	50.60	38.35	37.08
H	23	34.93	31.75	45.70	39.29	34.93	3.81	54.20	41.53	40.26
J	25	38.10	34.93	48.80	42.47	37.69	3.81	59.70	44.70	43.43

Downloaded from Arrow.com.

STAND OFF RECEPTACLES

MAIN CHARACTERISTICS

- Receptacles with stand-off flange shells, for attachment to printed circuit boards.
- The contacts are tin plated. Lead free versions are available.
- Available in wall mount (TVP00) and jam nut (TV07) configurations.
- Prevent any mechanical stress on the contact tails.
- Provide grounding continuity between PCB and box.
- Increase reliability and resistance to shocks and vibrations
- For composite versions, please consult us.

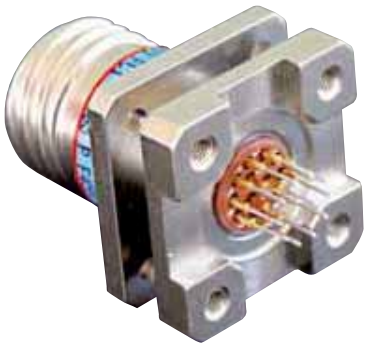

OVERALL DIMENSIONS

Jam nut receptacle (size 9 and 11)

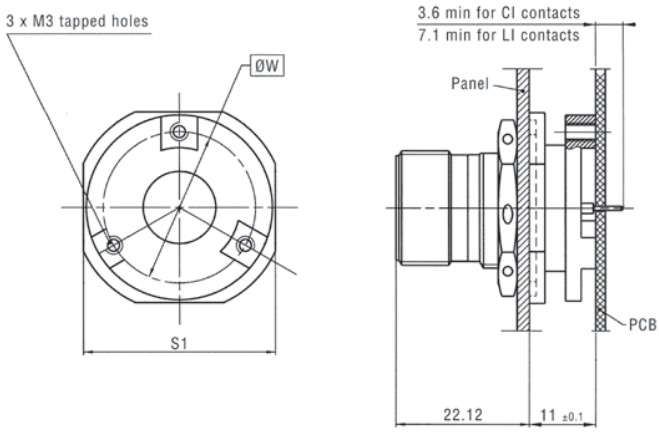

Square flange receptacle (size 9 to 25)

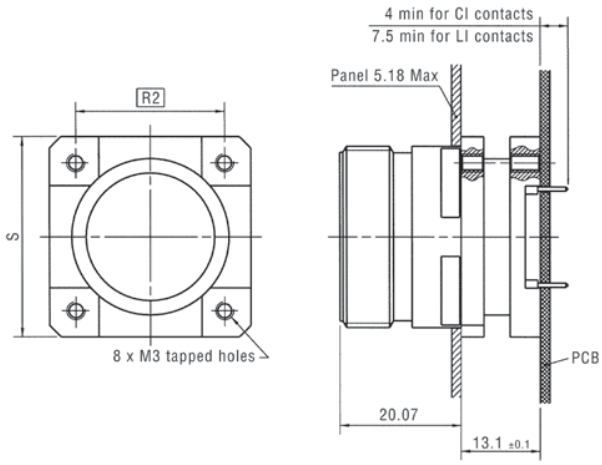

Jam nut receptacle (size 13 to 25)

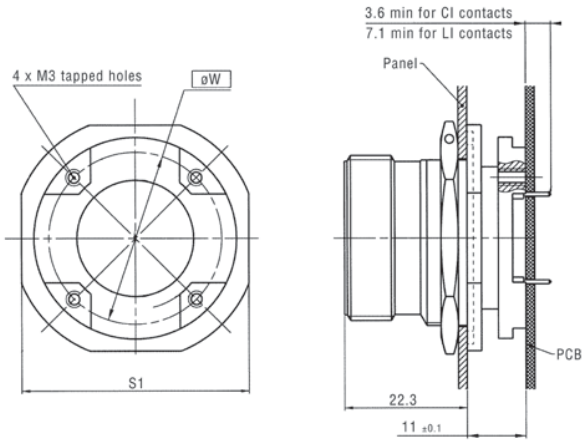

Shell Size	S ± 0.25 (mm)	R2 (mm)	S1 ± 0.4 (mm)	øW (mm)
9	23.83	16.00	27.0	20.50
11	26.19	18.26	31.8	25.20
13	28.58	20.62	34.9	25.25
15	30.96	23.01	38.1	28.42
17	33.32	26.10	41.3	31.42
19	36.53	27.24	46.0	35.03
21	39.67	29.36	49.2	37.82
23	42.88	31.75	52.4	41.12
25	46.02	34.93	55.6	44.30

Contact us for more detailed information.

For ordering informations, please refer to page 36.

Downloaded from Arrow.com.

PRINTED CIRCUIT BOARD DRILLING

RECEPTACLES EQUIPPED WITH SIZE 22D CONTACTS

The marking of contact cavities is shown on the mating side view of the male insert.
The marking on the female insert is symmetrical in relation to the +Y/-Y axis.
For recommended hole diameters (øA) see table on page 22.

9-35

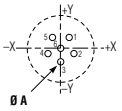

6 contacts
size 22D

Cavity marking	x (mm)	y (mm)
1	+ 1.14	+ 1.98
2	+ 1.98	- 1.14
3	0	- 2.29
4	- 1.98	- 1.14
5	- 1.14	+ 1.98
6	0	0

11-35

13 contacts
size 22D

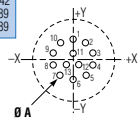

Cavity marking	x (mm)	y (mm)
1	0	+ 3.71
2	+ 2.16	+ 3.00
3	+ 3.51	+ 1.14
4	+ 3.51	- 1.14
5	+ 2.16	- 3.00
6	0	- 3.71
7	- 2.16	- 3.00
8	- 3.51	- 1.14
9	- 3.51	+ 1.14
10	- 2.16	+ 3.00
11	0	+ 1.42
12	+ 1.24	- 0.89
13	- 1.24	- 0.89

13-35

22 contacts
size 22D

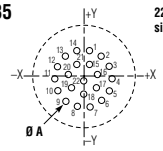

Cavity marking	x (mm)	y (mm)
1	+ 1.14	+ 5.00
2	+ 3.20	+ 4.01
3	+ 4.62	+ 2.24
4	+ 5.16	0
5	+ 4.62	- 2.24
6	+ 3.20	- 4.01
7	+ 1.14	- 5.00
8	- 1.14	- 5.00
9	- 3.20	- 4.01
10	- 4.62	- 2.24
11	- 5.16	0
12	- 4.62	+ 2.24
13	- 3.20	+ 4.01
14	- 1.14	+ 5.00
15	+ 1.14	+ 2.72
16	+ 2.97	+ 0.66
17	+ 2.36	- 1.91
18	0	- 3.05
19	- 2.36	- 1.91
20	- 2.97	+ 0.66
21	- 1.14	+ 2.72
22	0	- 0.76

15-35

37 contacts
size 22D

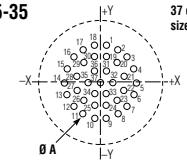

Cavity marking	x (mm)	y (mm)
1	+ 1.14	+ 6.65
2	+ 3.12	+ 5.51
3	+ 5.36	+ 4.06
4	+ 6.45	+ 2.03
5	+ 6.76	- 0.25
6	+ 6.27	- 2.49
7	+ 5.08	- 4.45
8	+ 3.30	- 5.89
9	+ 1.14	- 6.65
10	- 1.14	- 6.65
11	- 3.30	- 5.89
12	- 5.08	- 4.45
13	- 6.27	- 2.49
14	- 6.76	- 0.25
15	- 6.45	+ 2.03
16	- 5.36	+ 4.06
17	- 3.12	+ 5.51
18	- 1.14	+ 6.65
19	+ 1.14	+ 4.37
20	+ 3.12	+ 3.02
21	+ 4.32	+ 1.02
22	+ 4.32	- 1.27
23	+ 3.12	- 3.23
24	+ 1.14	- 4.37
25	- 1.14	- 4.37
26	- 3.12	- 3.23
27	- 4.32	- 1.27
28	- 4.32	+ 1.02
29	- 3.12	+ 3.02
30	- 1.14	+ 4.37
31	+ 1.14	+ 1.88
32	+ 2.29	- 0.10
33	+ 1.14	- 2.08
34	- 1.14	- 2.08
35	- 2.29	- 0.10
36	- 1.14	+ 1.88
37	0	- 0.10

17-35

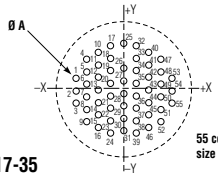

55 contacts
size 22D

Cavity marking	x (mm)	y (mm)
1	- 7.92	+ 2.18
2	- 7.92	- 0.10
3	- 7.92	- 2.39
4	- 6.15	+ 5.61
5	- 5.94	+ 3.33
6	- 5.94	+ 1.04
7	- 5.94	- 1.24
8	- 5.94	- 3.53
9	- 5.94	- 5.82
10	- 4.37	+ 7.09
11	- 3.96	+ 4.47
12	- 3.96	+ 2.18
13	- 3.96	- 0.10
14	- 3.96	- 2.39
15	- 3.96	- 4.67
16	- 3.96	- 6.96
17	- 2.26	+ 8.03
18	- 1.98	+ 5.61
19	- 1.98	+ 3.33
20	- 1.98	+ 1.04
21	- 1.98	- 1.24
22	- 1.98	- 3.53
23	- 1.98	- 5.82
24	- 1.98	- 8.10
25	0	+ 8.36
26	0	+ 4.47
27	0	+ 2.18
28	0	- 0.10
29	0	- 2.39
30	0	- 4.67
31	0	- 6.96
32	+ 2.26	+ 8.03
33	+ 1.98	+ 5.61
34	+ 1.98	+ 3.33
35	+ 1.98	+ 1.04
36	+ 1.98	- 1.24
37	+ 1.98	- 3.53
38	+ 1.98	- 5.82
39	+ 1.98	- 8.10
40	+ 4.37	+ 7.09
41	+ 3.96	+ 4.47
42	+ 3.96	+ 2.18
43	+ 3.96	- 0.10
44	+ 3.96	- 2.39
45	+ 3.96	- 4.67
46	+ 3.96	- 6.96
47	+ 6.15	+ 5.61
48	+ 5.94	+ 3.33
49	+ 5.94	+ 1.04
50	+ 5.94	- 1.24
51	+ 5.94	- 3.53
52	+ 5.94	- 5.82
53	+ 7.92	+ 2.18
54	+ 7.92	- 0.10
55	+ 7.92	- 2.39

19-35

66 contacts
size 22D

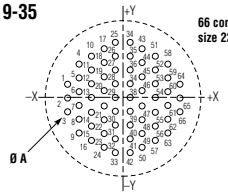

Cavity marking	x (mm)	y (mm)
1	- 9.07	+ 2.29
2	- 9.07	0
3	- 9.07	- 2.29
4	- 7.09	+ 5.72
5	- 7.09	+ 3.43
6	- 7.09	+ 1.14
7	- 7.09	- 1.14
8	- 7.09	- 3.43
9	- 7.09	- 5.72
10	- 5.11	+ 6.86
11	- 5.11	+ 4.57
12	- 5.11	+ 2.29
13	- 5.11	0
14	- 5.11	- 2.29
15	- 5.11	- 4.57
16	- 5.11	- 6.86
17	- 3.12	+ 8.00
18	- 3.12	+ 5.72
19	- 3.12	+ 3.43
20	- 3.12	+ 1.14
21	- 3.12	- 1.14
22	- 3.12	- 3.43
23	- 3.12	- 5.72
24	- 3.12	- 8.00
25	- 1.14	+ 9.14
26	- 1.14	+ 6.86
27	- 1.14	+ 4.57
28	- 1.14	+ 2.29
29	- 1.14	0
30	- 1.14	- 2.29
31	- 1.14	- 4.57
32	- 1.14	- 6.86
33	- 1.14	- 9.14
34	+ 1.14	+ 9.14
35	+ 1.14	+ 6.86
36	+ 1.14	+ 4.57
37	+ 1.14	+ 2.29
38	+ 1.14	0
39	+ 1.14	- 2.29
40	+ 1.14	- 4.57
41	+ 1.14	- 6.86
42	+ 1.14	- 9.14
43	+ 3.12	+ 8.00
44	+ 3.12	+ 5.72
45	+ 3.12	+ 3.43
46	+ 3.12	+ 1.14
47	+ 3.12	- 1.14
48	+ 3.12	- 3.43
49	+ 3.12	- 5.72
50	+ 3.12	- 8.00
51	+ 5.11	- 6.86
52	+ 5.11	+ 4.57
53	+ 5.11	+ 2.29
54	+ 5.11	0
55	+ 5.11	- 2.29
56	+ 5.11	- 4.57
57	+ 5.11	- 6.86
58	+ 7.09	+ 5.72
59	+ 7.09	+ 3.43
60	+ 7.09	+ 1.14
61	+ 7.09	- 1.14
62	+ 7.09	- 3.43
63	+ 7.09	- 5.72
64	+ 9.07	+ 2.29
65	+ 9.07	0
66	+ 9.07	- 2.29

21-35

79 contacts
size 22D

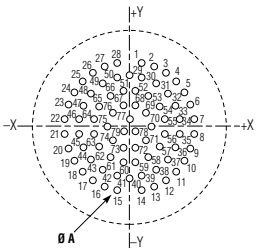

Cavity marking	x (mm)	y (mm)
1	+ 1.35	+ 10.82
2	+ 3.71	+ 10.26
3	+ 5.89	+ 9.19
4	+ 7.77	+ 7.67
5	+ 9.27	+ 5.77
6	+ 10.31	+ 3.58
7	+ 10.85	+ 1.22
8	+ 10.85	- 1.22
9	+ 10.31	- 3.58
10	+ 9.27	- 5.77
11	+ 7.77	- 7.67
12	+ 5.89	- 9.19
13	+ 3.71	- 10.26
14	+ 1.35	- 10.82
15	- 1.35	- 10.82
16	- 3.71	- 10.26
17	- 5.89	- 9.19
18	- 7.77	- 7.67
19	- 9.27	- 5.77
20	- 10.31	- 3.58
21	- 10.85	- 1.22
22	- 10.85	+ 1.22
23	- 10.31	+ 3.58
24	- 9.27	+ 5.77
25	- 7.77	+ 7.67
26	- 5.89	+ 9.19
27	- 3.71	+ 10.26
28	- 1.35	+ 10.82
29	0	+ 8.20
30	+ 2.49	+ 8.18
31	+ 4.67	+ 7.11
32	+ 6.55	+ 5.59
33	+ 7.90	+ 3.58
34	+ 8.43	+ 1.22
35	+ 8.43	- 1.22
36	+ 7.90	- 3.58
37	+ 6.55	- 5.59
38	+ 4.67	- 7.11
39	+ 2.49	- 8.18
40	0	- 8.84
41	- 2.49	- 8.18
42	- 4.67	- 7.11
43	- 6.55	- 5.59
44	- 7.90	- 3.58
45	- 8.43	- 1.22
46	- 8.43	+ 1.22
47	- 7.90	+ 3.58
48	- 6.55	+ 5.59
49	- 4.67	+ 7.11
50	- 2.49	+ 8.18
51	- 1.22	+ 6.12
52	+ 1.22	+ 6.12
53	+ 3.40	+ 5.05
54	+ 5.28	+ 3.53
55	+ 6.02	+ 1.22
56	+ 6.02	- 1.22
57	+ 5.28	- 3.53
58	+ 3.40	- 5.05
59	+ 1.22	- 6.12
60	- 1.22	- 6.12
61	- 3.40	- 5.05
62	- 5.28	- 3.53
63	- 6.02	- 1.22
64	- 6.02	+ 1.22
65	- 5.28	+ 3.53
66	- 3.40	+ 5.05
67	- 1.22	+ 3.71
68	+ 1.22	+ 3.71
69	+ 3.18	+ 2.29
70	+ 3.94	0
71	+ 3.18	- 2.29
72	+ 1.22	- 3.71
73	- 1.22	- 3.71
74	- 3.18	- 2.29
75	- 3.94	0
76	- 3.18	+ 2.29
77	0	+ 1.35
78	+ 1.22	- 0.74
79	- 1.22	- 0.74

23-35

100 contacts
size 22D

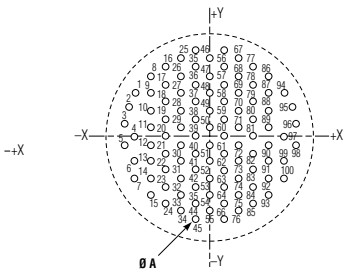

Cavity marking	x (mm)	y (mm)
1	- 10.87	+ 6.12
2	- 11.86	+ 3.91
3	- 12.40	+ 1.55
4	- 10.54	0
5	- 12.40	- 1.55
6	- 10.87	- 3.61
7	- 10.87	- 6.02
8	- 8.43	+ 8.46
9	- 8.43	+ 6.05
10	- 8.43	+ 3.63
11	- 8.43	+ 1.22
12	- 8.43	- 1.19
13	- 8.43	- 3.61
14	- 8.43	- 6.02
15	- 8.43	- 8.43
16	- 6.32	+ 9.65
17	- 6.32	+ 7.24
18	- 6.32	+ 4.83
19	- 6.32	+ 2.41
20	- 6.32	0
21	- 6.32	- 2.41
22	- 6.32	- 4.83
23	- 6.32	- 7.24
24	- 6.32	- 9.65
25	- 4.22	+ 10.87
26	- 4.22	+ 8.46
27	- 4.22	+ 6.05
28	- 4.22	+ 3.63
29	- 4.22	+ 1.22
30	- 4.22	- 1.19
31	- 4.22	- 3.61
32	- 4.22	- 6.02
33	- 4.22	- 8.43
34	- 4.22	- 10.85
35	- 2.11	+ 12.07
36	- 2.11	+ 9.65
37	- 2.11	+ 7.24
38	- 2.11	+ 4.83
39	- 2.11	+ 2.41
40	- 2.11	0
41	- 2.11	- 2.41
42	- 2.11	- 4.83
43	- 2.11	- 7.24
44	- 2.11	- 9.65
45	- 2.11	- 12.07
46	0	+ 10.87
47	0	+ 8.46
48	0	+ 6.05
49	0	+ 3.63
50	0	+ 1.22
51	0	- 1.19
52	0	- 3.61
53	0	- 6.02
54	0	- 8.43
55	0	- 10.85
56	+ 2.11	+ 12.07
57	+ 2.11	+ 9.65
58	+ 2.11	+ 7.24
59	+ 2.11	+ 4.83
60	+ 2.11	+ 2.41
61	+ 2.11	0
62	+ 2.11	- 2.41
63	+ 2.11	- 4.83
64	+ 2.11	- 7.24
65	+ 2.11	- 9.65
66	+ 2.11	- 12.07
67	+ 4.22	+ 10.87
68	+ 4.22	+ 8.46
69	+ 4.22	+ 6.05
70	+ 4.22	+ 3.63
71	+ 4.22	+ 1.22
72	+ 4.22	- 1.19
73	+ 4.22	- 3.61
74	+ 4.22	- 6.02
75	+ 4.22	- 8.43
76	+ 4.22	- 10.85
77	+ 6.32	+ 9.65
78	+ 6.32	+ 7.24
79	+ 6.32	+ 4.83
80	+ 6.32	+ 2.41
81	+ 6.32	0
82	+ 6.32	- 2.41
83	+ 6.32	- 4.83
84	+ 6.32	- 7.24
85	+ 6.32	- 9.65
86	+ 8.43	- 8.46
87	+ 8.43	+ 6.05
88	+ 8.43	+ 3.63
89	+ 8.43	+ 1.22
90	+ 8.43	- 1.19
91	+ 8.43	- 3.61
92	+ 8.43	- 6.02
93	+ 8.43	- 8.43
94	+ 10.87	+ 6.12
95	+ 11.86	+ 3.91
96	+ 12.40	+ 1.55
97	+ 10.54	0
98	+ 12.40	- 1.55
99	+ 10.87	- 3.61
100	+ 10.87	- 6.02

Downloaded from Arrow.com.

Cavity marking	x (mm)	y (mm)
1	- 12.17	+ 7.09
2	- 13.21	+ 4.83
3	- 13.87	+ 2.41
4	- 14.10	0
5	- 13.87	- 2.41
6	- 13.21	- 4.83
7	- 12.17	- 7.09
8	- 10.77	+ 9.07
9	- 10.54	+ 4.83
10	- 10.54	+ 2.41
11	- 10.54	0
12	- 10.54	- 2.41
13	- 10.54	- 4.83
14	- 10.77	- 9.07
15	- 8.43	+ 11.28
16	- 8.43	+ 8.43
17	- 8.43	+ 6.02
18	- 8.43	+ 3.61
19	- 8.43	+ 1.19
20	- 8.43	- 1.19
21	- 8.43	- 3.61
22	- 8.43	- 6.02

Cavity marking	x (mm)	y (mm)
23	- 8.43	- 8.43
24	- 8.43	- 10.85
25	- 6.32	+ 12.60
26	- 6.32	+ 9.65
27	- 6.32	+ 7.24
28	- 6.32	+ 4.83
29	- 6.32	+ 2.41
30	- 6.32	0
31	- 6.32	- 2.41
32	- 6.32	- 4.83
33	- 6.32	- 7.24
34	- 6.32	- 9.65
35	- 6.32	- 12.07
36	- 4.06	+ 13.49
37	- 4.22	+ 10.85
38	- 4.22	+ 8.43
39	- 4.22	+ 6.02
40	- 4.22	+ 3.61
41	- 4.22	+ 1.19
42	- 4.22	- 1.19
43	- 4.22	- 3.61
44	- 4.22	- 6.02

Cavity marking	x (mm)	y (mm)
45	- 4.22	- 8.43
46	- 4.22	- 10.85
47	- 4.22	- 13.26
48	- 2.11	+12.07
49	- 2.11	+ 9.65
50	- 2.11	+ 7.24
51	- 2.11	+ 4.83
52	- 2.11	+ 2.41
53	- 2.11	0
54	- 2.11	- 2.41
55	- 2.11	- 4.83
56	- 2.11	- 7.24
57	- 2.11	- 9.65
58	- 2.11	- 12.07
59	0	+ 13.26
60	0	+ 10.85
61	0	+ 8.43
62	0	+ 6.02
63	0	+ 3.61
64	0	+ 1.19
65	0	- 1.19
66	0	- 3.61

Cavity marking	x (mm)	y (mm)
67	0	- 6.02
68	0	- 8.43
69	0	- 10.85
70	0	- 14.10
71	+ 2.11	+ 12.07
72	+ 2.11	+ 9.65
73	+ 2.11	+ 7.24
74	+ 2.11	+ 4.83
75	+ 2.11	+ 2.41
76	+ 2.11	0
77	+ 2.11	- 2.41
78	+ 2.11	- 4.83
79	+ 2.11	- 7.24
80	+ 2.11	- 9.65
81	+ 2.11	- 12.07
82	+ 4.06	+ 13.49
83	+ 4.22	+ 10.85
84	+ 4.22	+ 8.43
85	+ 4.22	+ 6.02
86	+ 4.22	+ 3.61
87	+ 4.22	+ 1.19
88	+ 4.22	- 1.19

Cavity marking	x (mm)	y (mm)
89	+ 4.22	- 3.61
90	+ 4.22	- 6.02
91	+ 4.22	- 8.43
92	+ 4.22	- 10.85
93	+ 4.22	- 13.26
94	+ 6.32	+12.60
95	+ 6.32	+ 9.65
96	+ 6.32	+ 7.24
97	+ 6.32	+ 4.83
98	+ 6.32	+ 2.41
99	+ 6.32	0
100	+ 6.32	- 2.41
101	+ 6.32	- 4.83
102	+ 6.32	- 7.24
103	+ 6.32	- 9.65
104	+ 6.32	-12.07
105	+ 8.43	+11.28
106	+ 8.43	+ 8.43
107	+ 8.43	+ 6.02
108	+ 8.43	+ 3.61
109	+ 8.43	+ 1.19
110	+ 8.43	- 1.19

Cavity marking	x (mm)	y (mm)
111	+ 8.43	- 3.61
112	+ 8.43	- 6.02
113	+ 8.43	- 8.43
114	+ 8.43	- 10.85
115	+ 10.77	+ 9.07
116	+ 10.54	+ 4.83
117	+ 10.54	+ 2.41
118	+ 10.54	0
119	+ 10.54	- 2.41
120	+ 10.54	- 4.83
121	+ 10.77	- 9.07
122	+ 12.17	+ 7.09
123	+ 13.21	+ 4.83
124	+ 13.87	+ 2.41
125	+ 14.10	0
126	+ 13.87	- 2.41
127	+ 13.21	- 4.83
128	+ 12.17	- 7.09

25-35

128 contacts
size 22D

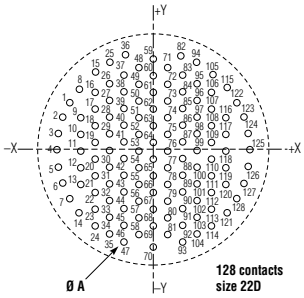

128 contacts
size 22D

RECEPTACLES EQUIPPED WITH SIZE 20 CONTACTS

The marking of contact cavities is shown on the mating side view of the male receptacle.
The marking on the female plug is symmetrical in relation to the +Y/-Y axis.
For recommended hole diameters (øA) see table on page 22.

Cavity marking	x (mm)	y (mm)
A	+ 1.65	+ 0.97
B	0	- 1.91
C	- 1.65	+ 0.97

9-98

3 contacts
size 20

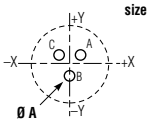

Cavity marking	x (mm)	y (mm)
A	0	+ 3.30
B	+ 3.30	0
C	+ 1.65	- 2.87
D	- 1.65	- 2.87
E	- 3.30	0
F	0	0

11-98

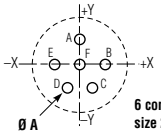

6 contacts
size 20

13-98

10 contacts
size 20

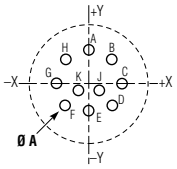

Cavity marking	x (mm)	y (mm)
A	0	+ 4.95
B	+ 3.18	+ 3.81
C	+ 4.90	+ 0.76
D	+ 4.17	- 2.67
E	0	- 3.43
F	- 4.17	- 2.67
G	- 4.90	+ 0.76
H	- 3.18	+ 3.81
J	+ 1.65	- 0.38
K	- 1.65	- 0.38

15-19

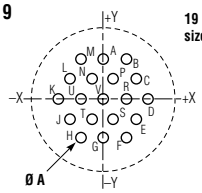

19 contacts
size 20

Cavity marking	x (mm)	y (mm)
A	0	+ 5.72
B	+ 3.30	+ 5.72

Cavity marking	x (mm)	y (mm)
C	+ 4.95	+ 2.87
D	+ 6.60	0

Cavity marking	x (mm)	y (mm)
E	+ 4.95	- 2.87
F	+ 3.30	- 5.72
G	0	- 5.72
H	- 3.30	- 5.72
J	- 4.95	- 2.87
K	- 6.60	0
L	- 4.95	+ 2.87
M	- 3.30	+ 5.72
N	- 1.65	+ 2.87
P	+ 1.65	+ 2.87
R	+ 3.30	0
S	+ 1.65	- 2.87
T	- 1.65	- 2.87
U	- 3.30	0
V	0	0

Cavity marking	x (mm)	y (mm)
A	0	+ 8.15
B	+ 3.33	+ 7.44
C	+ 6.07	+ 5.44
D	+ 7.75	+ 2.51

Repère contact	x (mm)	y (mm)
E	+ 8.10	- 0.86
F	+ 7.06	- 4.09
G	+ 4.80	- 6.60
H	+ 1.70	- 7.98

17-26

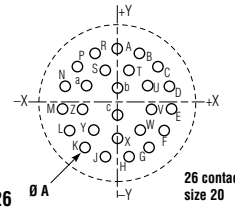

26 contacts
size 20

Cavity marking	x (mm)	y (mm)
J	- 1.70	- 7.98
K	- 4.80	- 6.60
L	- 7.06	- 4.09
M	- 8.10	- 0.86
N	- 7.75	+ 2.51
P	- 6.07	+ 5.44
R	- 3.33	+ 7.44
S	- 1.78	+ 4.50
T	+ 1.78	+ 4.50
U	+ 4.45	+ 2.39
V	+ 4.52	- 0.91
W	+ 3.02	- 3.84
X	0	- 5.16
Y	- 3.02	- 3.84
Z	- 4.52	- 0.91
a	- 4.45	+ 2.39
b	0	+ 1.65
c	0	- 1.65

19-32

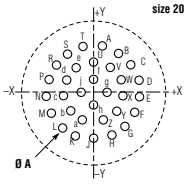

32 contacts
size 20

Cavity marking	x (mm)	y (mm)
A	+ 1.68	+ 8.97
B	+ 4.80	+ 7.75
C	+ 7.26	+ 5.51
D	+ 8.76	+ 2.49
E	+ 9.07	- 0.84

Cavity marking	x (mm)	y (mm)
F	+ 8.15	- 4.06
G	+ 6.15	- 6.73
H	+ 3.30	- 8.51
J	0	- 9.12
K	- 3.30	- 8.51

Cavity marking	x (mm)	y (mm)
L	- 6.15	- 6.73
M	- 8.15	- 4.06
N	- 9.07	- 0.84
P	- 8.76	+ 2.49
R	- 7.26	+ 5.51
S	- 4.80	+ 7.75
T	- 1.68	+ 8.97
U	0	+ 5.84
V	+ 3.15	+ 4.90
W	+ 5.31	+ 2.41
X	+ 5.79	- 0.84
Y	+ 4.42	- 3.84
Z	+ 1.65	- 5.61
a	- 1.65	- 5.61
b	- 4.42	- 3.84
c	- 5.79	- 0.84
d	- 5.31	+ 2.41
e	- 3.15	+ 4.90
f	0	+ 2.44
g	+ 2.44	0
h	0	- 2.44
j	- 2.44	0

21-41

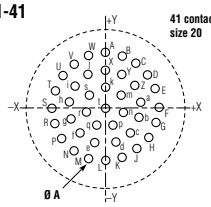

41 contacts
size 20

Cavity marking	x (mm)	y (mm)
A	0	+ 10.60
B	+ 3.28	+ 10.09
C	+ 6.23	+ 8.58
D	+ 8.58	+ 6.23
E	+ 10.09	+ 3.28
F	+ 10.60	0
G	+ 10.09	- 3.28
H	+ 8.58	- 6.23

Cavity marking	x (mm)	y (mm)
J	+ 6.23	- 8.58
K	+ 3.28	- 10.09
L	0	- 10.60
M	- 3.28	- 10.09
N	- 6.23	- 8.58
P	- 8.58	- 6.23
R	- 10.09	- 3.28
S	- 10.60	0

Cavity marking	x (mm)	y (mm)
T	- 10.09	+ 3.28
U	- 8.58	+ 6.23
V	- 6.23	+ 8.58
W	- 3.28	+10.09
X	0	+ 7.20
Y	+ 3.35	+ 6.38
Z	+ 5.92	+ 4.09
a	+ 7.15	+ 0.87
b	+ 6.73	- 2.55
c	+ 4.78	- 5.39
d	+ 1.73	- 6.99
e	- 1.73	- 6.99
f	- 4.78	- 5.39
g	- 6.73	- 2.55
h	- 7.15	+ 0.87
i	- 5.92	+ 4.09
j	- 3.35	+ 6.38
k	0	+ 3.81
m	+ 2.98	+ 2.38
n	+ 3.71	- 0.85
p	- 1.66	- 3.43
q	+ 1.66	- 3.43
r	- 3.71	- 0.85
s	- 2.98	+ 2.38
t	0	0

Downloaded from Arrow.com.

23-53

53 contacts
size 20

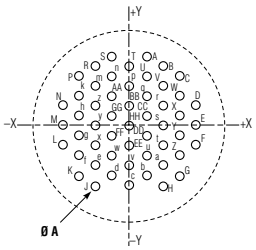

Cavity marking	x (mm)	y (mm)
A	+ 2.84	+ 11.56
B	+ 5.72	+ 9.91
C	+ 8.53	+ 8.26
D	+ 11.43	+ 3.30
E	+ 11.43	0
F	+ 11.43	- 3.30
G	+ 8.53	- 8.26
H	+ 5.72	- 10.41
J	- 5.72	- 10.41
K	- 8.53	- 8.26
L	- 11.43	- 3.30
M	- 11.43	0
N	- 11.43	+ 3.30
P	- 8.53	+ 8.26
R	- 5.72	+ 9.91
S	- 2.84	+ 11.56
T	0	+ 9.91
U	+ 2.84	+ 8.26

Cavity marking	x (mm)	y (mm)
V	+ 5.72	+ 6.60
W	+ 8.53	+ 4.95
X	+ 8.53	+ 1.65
Y	+ 8.53	- 1.65
Z	+ 8.53	- 4.95
a	+ 5.72	- 6.60
b	+ 2.84	- 8.26
c	0	- 9.91
d	- 2.84	- 8.26
e	+ 5.72	- 6.60
f	+ 8.53	- 4.95
g	+ 8.53	- 1.65
h	+ 8.53	+ 1.65
k	+ 8.53	+ 4.95
m	- 5.72	+ 6.60
n	- 2.84	+ 8.26
p	0	+ 6.60
q	+ 2.84	+ 4.95

Cavity marking	x (mm)	y (mm)
r	+ 5.72	+ 3.30
s	+ 5.72	0
t	+ 5.72	- 3.30
u	+ 2.84	- 4.95
v	0	- 6.60
w	- 2.84	- 4.95
x	- 5.72	- 3.30
y	- 5.72	0
z	- 5.72	+ 3.30
AA	- 2.84	+ 4.95
BB	0	+ 3.30
CC	+ 2.84	+ 1.65
DD	+ 2.84	- 1.65
EE	0	- 3.30
FF	- 2.84	- 1.65
GG	- 2.84	+ 1.65
HH	0	0

25-61

61 contacts
size 20

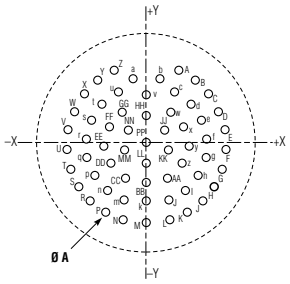

Cavity marking	x (mm)	y (mm)
A	+ 4.98	+ 12.70
B	+ 7.98	+ 11.05
C	+ 10.49	+ 8.71
D	+ 12.32	+ 5.84
E	+ 13.39	+ 2.57
F	+ 13.61	- 0.76
G	+ 12.98	- 4.17
H	+ 11.53	- 7.29
J	+ 9.35	- 9.93
K	+ 6.58	- 11.94
L	+ 3.40	- 13.18
M	0	- 13.64
N	- 3.40	- 13.18
P	- 6.58	- 11.94
R	- 9.35	- 9.93
S	- 11.53	- 7.29
T	- 12.98	- 4.17
U	- 13.61	- 0.76
V	- 13.39	+ 2.57
W	- 12.32	+ 5.84
X	- 10.49	+ 8.71

Cavity marking	x (mm)	y (mm)
Y	- 7.98	+ 11.05
Z	- 4.98	+ 12.70
a	- 1.73	+ 11.53
b	+ 1.73	+ 11.53
c	+ 4.39	+ 9.22
d	+ 7.24	+ 7.19
e	+ 9.19	+ 4.45
f	+ 10.13	+ 1.17
g	+ 9.96	- 2.24
h	+ 8.66	- 5.41
i	+ 6.38	- 7.98
j	+ 3.38	- 9.63
k	0	- 10.21
m	- 3.38	- 9.63
n	- 6.38	- 7.98
p	- 8.65	- 5.41
q	- 9.96	- 2.24
r	- 10.13	+ 1.17
s	- 9.19	+ 4.45
t	- 7.24	+ 7.19
u	- 4.39	+ 9.22

Cavity marking	x (mm)	y (mm)
v	0	+ 8.59
w	+ 3.73	+ 8.66
x	+ 6.02	+ 3.10
y	+ 6.78	- 0.25
z	+ 5.79	- 3.53
AA	+ 3.33	- 5.92
BB	0	- 6.78
CC	- 3.33	- 5.92
DD	- 5.79	- 3.53
EE	- 6.78	- 0.25
FF	- 6.02	+ 3.10
GG	- 3.73	+ 5.66
HH	0	+ 5.08
JJ	+ 2.67	+ 2.39
KK	+ 3.43	- 1.04
LL	0	- 3.35
MM	- 3.43	- 1.04
NN	- 2.67	+ 2.39
PP	0	0

Please consult us for other insert arrangements.

Contacts	Ø A (mm) Minimum hole diameter			
	CI Version		LI Version	
	Gold PCB contacts	Tinned PCB contacts	Gold PCB contacts	Tinned PCB contacts
Size 22D	0.8	0.9	1.0	1.1
Size 20	1.0	1.1	1.0	1.1

STANDARD PCB - TAIL DIMENSIONS AT THE REAR OF RECEPTACLES (IN MM)

			CI Contacts (5 mm tail length)						LI Contacts (8.5 mm tail length)					
			TV 07 - CTV 07		TVP 00		CTVP 00		TV 07 - CTV 07		TVP 00		CTVP 00	
			09 & 11	13 to 25	09 to 19	21 to 25	09 to 19	21 to 25	09 & 11	13 to 25	09 to 19	21 to 25	09 to 19	21 to 25
Pin	L1	min	10.13	9.95	11.55	12.31	12.71	13.47	10.13	9.95	11.55	12.31	12.71	13.47
		Max	11.07	10.89	12.39	13.15	13.52	14.28	11.07	10.89	12.39	13.15	13.52	14.28
	L2	min	15.03	14.85	16.45	17.21	17.61	18.37	18.53	18.35	19.95	20.71	21.11	21.87
		Max	16.17	15.99	17.49	18.25	18.62	19.38	19.67	19.49	20.99	21.75	22.12	22.88
Socket	L1	min	9.93	9.75	11.35	12.11	12.51	13.27	9.93	9.75	11.35	12.11	12.51	13.27
		Max	10.87	10.69	12.19	12.95	13.32	14.08	10.87	10.69	12.19	12.95	13.32	14.08
	L2	min	14.83	14.65	16.25	17.01	17.41	18.17	18.33	18.15	19.75	20.51	20.91	21.67
		Max	15.97	15.79	17.29	18.05	18.42	19.18	19.47	19.29	20.79	21.55	21.92	22.68

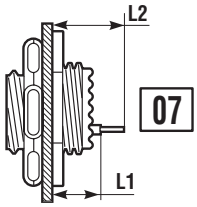

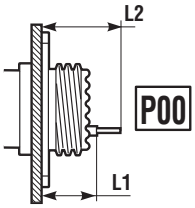

Downloaded from Arrow.com.

TVS-Y / TVS-YN HERMETIC RECEPTACLES

PRESENTATION

TVS-Y and TVS-YN hermetic receptacles are dedicated to applications requiring low air leakage or high protection facing to contamination.

MAIN CHARACTERISTICS

- 9 shell sizes (stainless steel)
- Solder pin contacts in nickel alloy
- Contact plating in active zone: Gold
- Glass insert
- Air leakage < 1.10^{-7} cm^3/s under 1 bar of differential pressure
- Passivation or nickel plating

OVERALL DIMENSIONS - HERMETIC VERSIONS

TVPS02Y **JD38999/21Y**

TVPS02YN **JD38999/21N**

Square flange receptacle

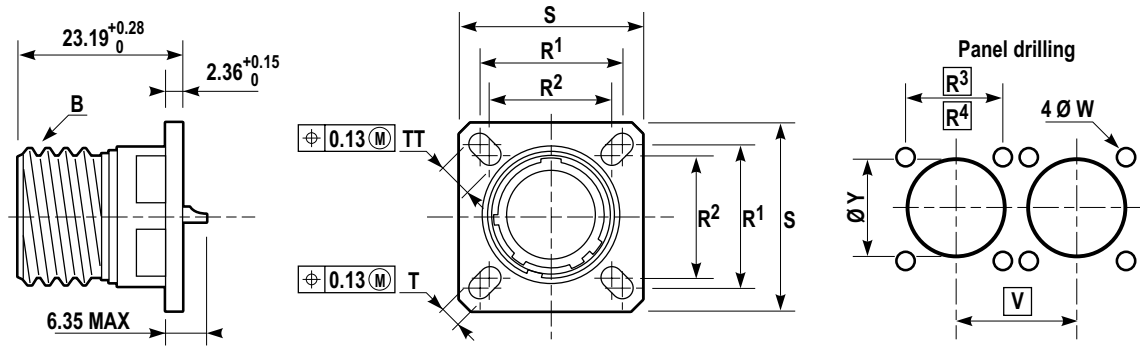

Shell size		B thread Class 2A 0.1P-0.3L-TS (inches)	R1 (mm)	R2 (mm)	S ±0.25 (mm)	T +0.20 -0.13 (mm)	TT +0.20 -0.13 (mm)	ØW +0 -0.25 (mm)	R3 (mm)	R4 (mm)	V Mini (mm)	ØY Mini (mm)
MIL-DTL-38999 Series III	Amphenol											
A	9	.6250	18.26	15.09	23.83	3.25	5.49	3.25	18.26	15.09	24.60	16.66
B	11	.7500	20.62	18.26	26.19	3.25	4.93	3.25	20.62	18.26	27.00	20.22
C	13	.8750	23.01	20.62	28.58	3.25	4.93	3.25	23.01	20.62	31.50	23.42
D	15	1.0000	24.61	23.01	30.96	3.25	4.39	3.25	24.61	23.01	34.50	26.59
E	17	1.1875	26.97	24.61	33.32	3.25	4.93	3.25	26.97	24.61	28.00	30.96
F	19	1.2500	29.36	26.97	36.53	3.25	4.93	3.25	29.36	26.97	40.50	32.94
G	21	1.3750	31.75	29.36	39.67	3.25	4.93	3.25	31.75	29.36	44.00	36.12
H	23	1.5000	34.93	31.75	42.88	3.91	6.15	3.81	34.93	31.75	47.00	39.29
J	25	1.6250	38.10	34.93	46.02	3.91	6.15	3.81	38.10	34.93	50.00	42.47

Downloaded from Arrow.com.

TVS07Y **JD38999/23Y**
TVS07YN **JD38999/23N**
Jam nut receptacle

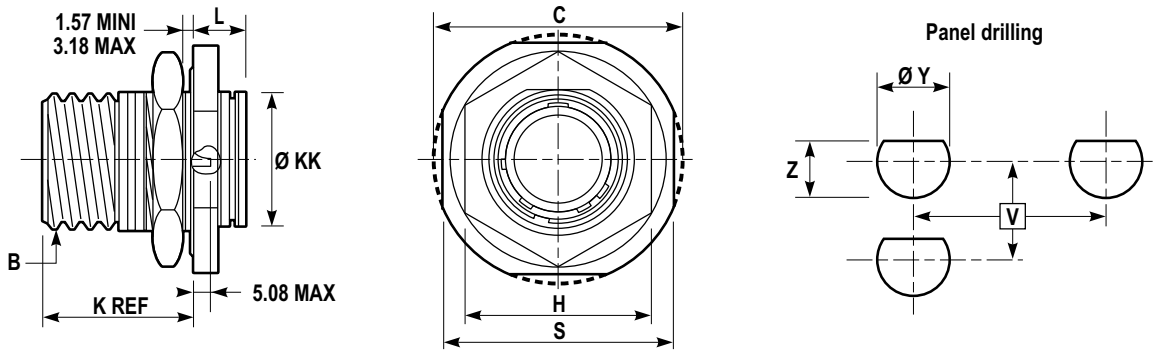

Shell size		B thread Class 2A 0.1P-0.3L-TS (inches)	C Maxi (mm)	H/plats +0.043 -0.41 (mm)	L Maxi (mm)	ØKK +0.28 0 (mm)	B ±0.25 (mm)	V Mini (mm)	ØY Mini (mm)	Z +0 -0.25 (mm)	Hex nut max torque value N.m
MIL-DTL-38999 Series III	Amphenol Socapex										
A	9	.6250	30.45	22.23	9.07	16.31	26.97	27.80	17.78	16.99	4.1
B	11	.7500	35.20	25.40	9.07	19.46	31.75	32.60	20.96	19.53	5.3
C	13	.8750	38.38	30.18	9.07	22.66	34.93	36.00	25.65	24.26	6.9
D	15	1.0000	41.55	33.32	9.07	25.86	38.10	39.60	28.83	27.53	8.6
E	17	1.1875	44.73	36.53	9.07	29.01	41.28	43.30	32.01	30.68	9.8
F	19	1.2500	49.50	39.67	9.68	32.21	46.02	47.00	35.18	33.86	10.9
G	21	1.3750	52.65	42.80	9.68	35.36	49.23	50.60	38.35	37.06	12.7
H	23	1.5000	65.85	46.02	9.68	38.56	52.37	54.20	41.53	40.01	13.8
J	25	1.6250	59.00	50.80	9.68	41.71	55.58	59.70	44.70	43.41	15

TVSIY **JD38999/25Y**
TVSIYN **JD38999/25N**
Solder mounting receptacle

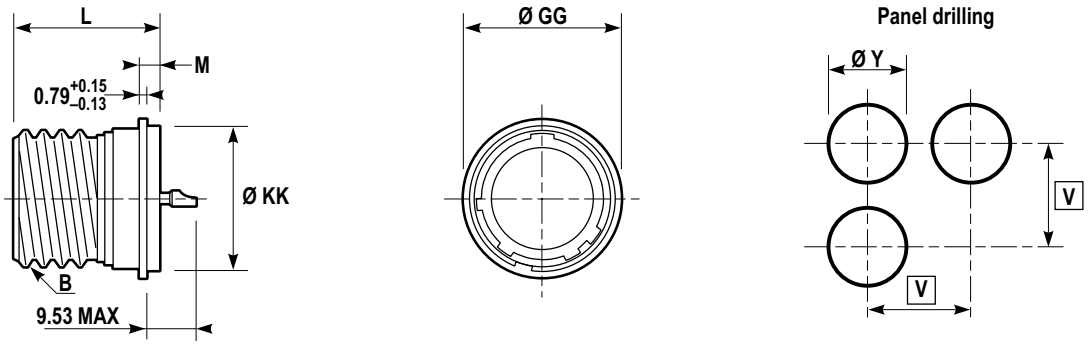

Shell size		B thread Class 2A 0.1P-0.3L-TS (inches)	ØGG +0.28 -0.25 (mm)	ØKK +0.03 -0.13 (mm)	L +0.28 -0 (mm)	M +0.15 -0.13 (mm)	V Mini (mm)	ØY Mini (mm)
MIL-DTL-38999 Series III	Amphenol							
A	9	.6250	19.05	17.07	20.47	3.18	24.60	17.60
B	11	.7500	21.44	19.84	20.47	3.18	27.00	20.40
C	13	.8750	24.61	23.01	20.47	3.18	31.50	23.50
D	15	1.0000	27.79	26.19	20.47	3.18	24.50	26.70
E	17	1.1875	30.94	29.36	20.47	3.18	38.00	29.90
F	19	1.2500	33.32	31.75	20.47	3.18	40.50	32.30
G	21	1.3750	36.53	34.93	20.47	3.18	44.00	35.50
H	23	1.5000	39.70	38.10	21.29	3.96	47.00	38.60
J	25	1.6250	42.88	41.28	21.29	3.96	50.00	41.80

Downloaded from Arrow.com.

BREAKAWAY CONNECTORS - LANYARD RELEASE PLUGS

PRESENTATION

Amphenol Breakaway Connectors provide unequaled performance in environments requiring instant disengagment.

Designed to provide quick disconnect of a connector plug and receptacle with an axial pull on the lanyard, the "Breakaway" Fail Safe connector family offers a wide range of electrical and mechanical features:

- Instant decoupling and damage free separation
- Completely intermateable with standard receptacles (D38999/20 and /24)
- Inventory support commonality through the use of standard insert arrangements and contacts

2 insert arrangements are available in MIL-STD-1760 lanyard release plugs, in accordance with the definition of BUS 1553 B standards in N coding (arrangement 25-20) and in A coding (arrangement 25-11) - Refer to pages 8 to 13 - insert arrangements marked with***

Other shell sizes and insert arrangements are also available in the MIL-DTL-38999 standard version. Please refer to pages 8 to 13 and consult us for further information.

For MIL-STD-1760 Type II connectors, please consult us.

OVERALL DIMENSIONS

Lanyard release plugs - MIL-STD-1760

Low profile version (ordering information on page 39)

TVFBRW JD38999/31W

Lanyard release plugs - MIL-STD-1760

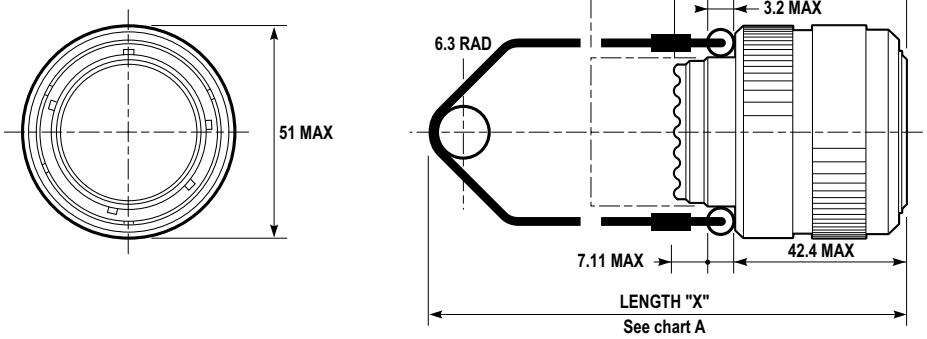

TABLE A

Length "X" MIL.STD 1760 coding	mm
A*	102
B*	115
C*	127
D	140
E	153
F	166
G	178
H	191
J	407
K	229
M	254
X	432

Other lengths are also available under TVFBRW proprietary designation. Consult us.

* for TV FBRW only

Downloaded from Arrow.com.

Lanyard release plugs

Standard version
(ordering information page 40)

885565...P	JD38999/29W
915565...P	JD38999/29F
885565...S	JD38999/30W
915565...S	JD38999/30F

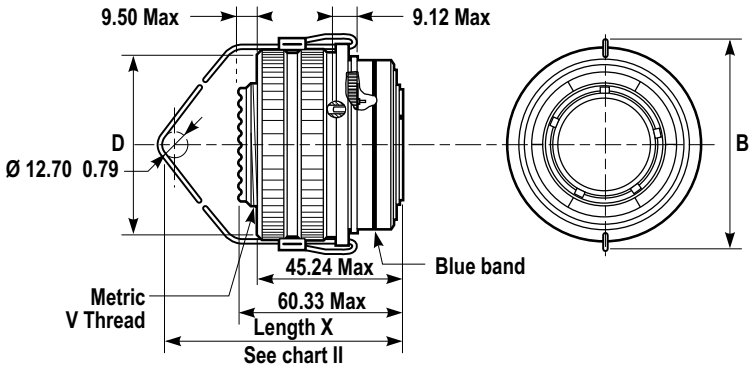

TABLE I

Arrangement code	Insert arrangement
04	11-04
06	11-35
07	11-98
08	11-02
10	13-4
11	13-08
13	13-98
14	13-35
18	15-5
19	15-19
20	15-35
21	15-97
22	15-18
23	15-15
27	17-06
28	17-08
29	17-26
30	17-35
31	17-99
37	19-11
38	19-28
39	19-32
40	19-35
47	21-11
48	21-16
49	21-35
50	21-41
51	21-39
57	23-21
58	23-35
59	23-53
60	23-55
61	23-54
66	25-19
67	25-29
68	25-35
69	25-43
70	25-61
71	25-04
72	25-24
73	25-46

TABLE II

Shell size		Metric Max	B Max (mm)	D Max (mm)
MIL-DTL-38999 Series III	Amphenol			
B	11	M15X1.0-6G	46.89	28.17
C	13	M18x1.0-6g	50.09	31.75
D	15	M22X1.0-6G	52.81	34.93
E	17	M25X1.0-6G	56.01	38.10
F	19	M28X1.0-6G	58.45	41.28
G	21	M31X1.0-6G	62.79	44.45
H	23	M34X1.0-6G	65.89	47.63
J	25	M37X1.0-6G	68.71	50.08

TABLE III

Length "X" (mm)	Code MS/Amphenol
102	A
115	B
127	C
140	D
153	E
166	F
178	G
191	H
203	I
216	J
229	K
242	L
254	M
267	N
280	P
293	R
305	S
318	T
331	U
356	V
381	W
407	X
432	Y
458	Z

Downloaded from Arrow.com.

THRU-BULKHEAD RECEPTACLES

TVB thru-bulkhead receptacles are used for the feed through of circuits on bulkheads or panels.

- Intermateable with MIL-DTL-38999 Series III connectors
- 9 shell sizes
- Interfacial seal on male side
- Olive drab cadmium or nickel plating
- Coding possibility

HOW TO ORDER

Thru-bulkhead Receptacles	TVB	W	15 35	PS	N	-

Shell Material
W: Olive drab cadmium plated aluminium
F: Electroless nickel plated aluminium
B: Marine bronze

Shell size and insert arrangements: see pages 8 to 11

Contact type
PS: Pin & Socket
PP: Pin both sides

Coding
N, A, B, C, D, E

Deviation
F467: Drilled and tapped mounting holes

For further information, please consult us.

RECEPTACLES WITH ENHANCED SEALING

TV07 ETC & TVP00 ETC receptacles with enhanced sealing are derived from the standard MIL-DTL-38999 Series III receptacles. The inserts have been modified to ensure an air leakage of < 1.10^{-6} cm^3/s under 1 bar of differential pressure.

- Intermateable with MIL-DTL-38999 Series III connectors
- 9 shell sizes
- Solder or PCB pin contacts. Socket contacts available upon request

HOW TO ORDER

Series	TV	P00	WETC	15 35	P	A

Shell Type
Square flange receptacle: 175°C (O.D. cadmium): **P00** 200°C (nickel, bronze): **PS00**
Jam nut receptacle: 175°C (O.D. cadmium): **07** 200°C (nickel, bronze): **S07**

Shell material, finish and contact type
WETC: Olive drab cadmium plated 175°C, solder contacts
WETCI: Olive drab cadmium plated 175°C, PCB contacts
FETC: Electroless nickel plated 200°C, solder contacts
FETCI: Electroless nickel plated 200°C, PCB contacts
BETC: Marine bronze 200°C, solder contacts
BETCI: Marine bronze 200°C, PCB contacts

Shell size and insert arrangements: see pages 8 to 11

Contact type
P: Pin

Coding
Blank for normal, **A, B, C, D, E**

For further information, please consult us.

Downloaded from Arrow.com.

INTEGRATED BACKSHELLS

Available on plugs and receptacles, these 2 in 1 connectors/band backshells provide a high EMI protection with a quick, easy and cost effective cabling process. They are low profile, with enhance sealing level and allow the use of macro and micro bands, as well as straight or right angle heat shrink moulded pieces. The design of the shells makes them compatible with over moulding process.

For further information, please consult us.

MIL-DTL-38999 SERIES III OPTICAL CONNECTORS

TVOP

The TVOP connector is an optical version of the MIL-DTL-38999 series III connector, which uses standard 2.5 mm telecom optical termini in dedicated high precision inserts. It is designed to provide high level of performance and reliability, and cost effective solution for outdoor and indoor applications.

- 1 to 8 channels
- Available in multimode, singlemode PC and singlemode APC
- 0.5 dB typical Insertion Loss in multimode and singlemode

Insert arrangements

11-2

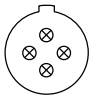

13-4

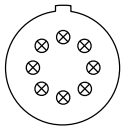

17-8

STARTOP

The STARTOP connector is made of standard MIL-DTL-38999 electrical connectors, using size 16 MIL-PRF-29504 optical termini.
Hybrid versions (electrical and optical) are available, for further details please consult us.

- 1 to 8 channels
- Available in multimode
- 0.8 dB typical Insertion Loss

Insert arrangements

11-02

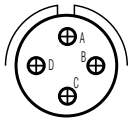

13-04

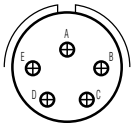

15-05

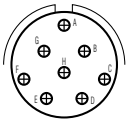

17-08

For further details, please consult the EWOC catalog (DOC-000503-ANG).

Downloaded from Arrow.com.

PROTECTION CAPS

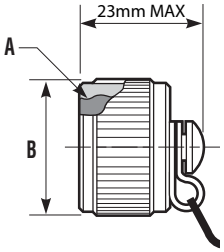

Protection cap for receptacles equipped with metallic chain, nylon cord or stainless steel rope

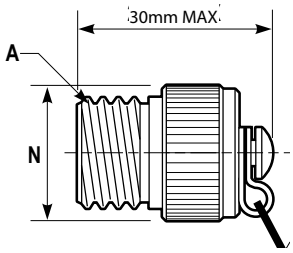

Protection cap for plugs equipped with metallic chain, nylon cord or stainless steel rope

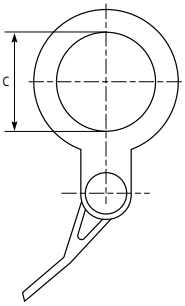

Termination of the chain, rope (RO type) or cord for jam nut receptacle protection caps

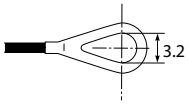

Termination of the cord or rope (R type) for square flange receptacle protection caps

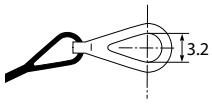

Termination of the chain for square flange receptacle and plug protection caps

Termination of the cord for plugs protection caps

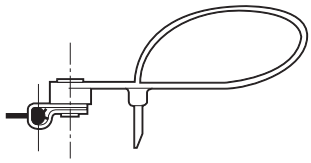

Cap type	Metallic chain length (mm)	Nylon cord length (mm)	Stainless steel rope length (mm)
BEC/BER for receptacle	152	105	127
BF for plug	127	160	127

Shell size		A thread 0.1P-0.3L-TS Class 2B (inches)	B Dia Max (mm)	C Dia Min (mm)	N Dia Max (mm)
MIL-DTL-38999 Series III	Amphenol				
A	9	.6250	22.23	17.86	22.73
B	11	.7500	25.40	21.44	25.40
C	13	.8750	28.58	25.81	29.74
D	15	1.0000	31.75	28.98	32.99
E	17	1.1875	36.53	32.16	36.47
F	19	1.2500	38.10	35.33	39.19
G	21	1.3750	41.28	38.51	42.42
H	23	1.5000	44.45	41.68	45.39
J	25	1.6250	47.63	44.86	48.62

ORDERING INFORMATION

Cap Series	B	EC	N	TV	W	15

Protection cap type
EC: For square flange receptacle
ER: For jam nut receptacle
F: For plug

Wire type
N: Nylon cord
Blank: Metallic chain
R: Jacketed stainless steel rope
RO: Jacketed stainless steel rope with washer end (only for plug)

Connector type

Finish
B: Bronze
F: Electroless nickel plated, aluminium version
W: Olive drab cadmium plated, aluminium version

Corresponding connector shell size:
09/11/13/15/17/19/21/23/25

For stainless steel caps, please consult us

Downloaded from Arrow.com.

ACCESSORIES

DUMMY RECEPTACLES

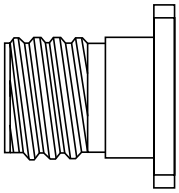

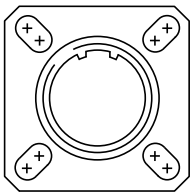

- Dummy receptacles match all plug types with any shell coding (N, A, B, C, D,E)
- Dimensions are identical to the front part of TVP00 receptacles
- A rubber washer ensures correct sealing of mated connectors
- Specific polarized versions are available on request

How to order - Amphenol designation

Dummy receptacle	SE	00	TV	W	11
Shell type **00:** derived from the TV square flange receptacle					
Series					
Finish **W:** Olive-drab cadmium plated **F:** Electroless nickel plated **B:** Marine Bronze					
Shell size 09/11/13/15/17/19/21/23/25					

HOLDING SUPPORT EQUIPPED WITH OLIVE DRAB CADMIUM DUMMY RECEPTACLES REFERENCE: 809 931

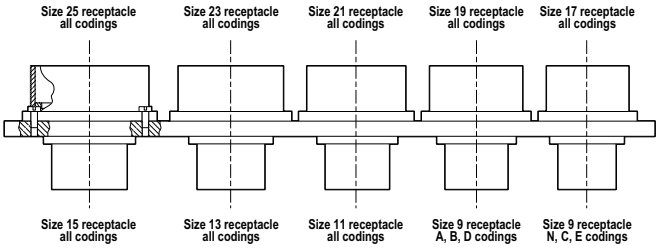

PLASTIC DUST CAPS

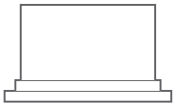

Shell size	Plastic dust caps for plug	Plastic dust caps for receptacles
9	606062	606061
11	805414	606062
13	606073	606063
15	606066	606064
17	606067	606065
19	606068	606066
21	606070	606067
23	606079	606068
25	606079	606069

Downloaded from Arrow.com.

ACCESSORIES

CRIMP CONTACTS

	Contact size	Pin contacts		Socket contacts	
		Proprietary No	Military No	Proprietary No	Military No
Signal and Power	00	Refer to datasheet E122		Refer to datasheet E122	
	4	900007	-	900047	-
	8	900197 900198*	-	900217	-
	12	900005	M39029/58-365	900045	M39029/56-353
	16	900000	M39029/58-364	900040	M39029/56-352
	20	900001	M39029/58-363	900041	M39029/56-351
	22D	900004	M39029/58-360	900044	M39029/56-348
	23	900049	M39029/18-177	900048	M39029/17-172

* for arrangement 21-48 only

	Contact size	Pin contacts		Socket contacts		Cable Type
		Proprietary No	Military No	Proprietary No	Military No	
Coax	8	900130	M39029/60-367	900140	M39029/59-366	M17/95-RG180
		900135	-	900145	-	M17/94-RG179 M17/113-RG316 M17/119-RG174
	12	900340	M39029/28-211	900350	M39029/75-416	M17/94-RG179 M17/113-RG316 M17/119-RG174
		900341	M39029/28-409	900351	M39029/75-417	M17/95-RG180 Raychem 9528 A1318
		900342**	-	900352**	-	M17/113-RG316
	16	900132	M39029/76-424	900142	M39029/77-428	M17/94-RG179 M17/113-RG316 M17/119-RG174 KX22A
		900131	M39029/76-425	900141	M39029/77-429	M17/93-RG178 M17/169-00001
Twinax	8	074834	M39029/90-529	072453	M39029/91-530	M17/176-00002
Twinax	8	600611	-	600614	-	M17/176-00002
Quadrax 100Ω	8	900330	-	900338	M39029/77-429	Tensolite NF24 Q100
Optical contact	16	-	M29504/4-4040	-	M29504/5-4046	50/125 & 62.5/125 fiber

** High performance size 12 coaxial contacts 50 ohms matched
For other cable types, please consult us

PIGGY BACK GROMMETS

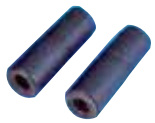

The piggy back grommets insure back contact sealing when using size 8 power, coax, twinax or quadrax contacts.

Type of contact	Cable OD (mm)	Proprietary No
Size 8 power	4.4 to 5.2	900471
Size 8 twinax and coax	3 to 4.4	900472
Size 8 twinax and coax	3 to 4.4	900476 ***

*** to use for arrangements 25-20, 19-17

Downloaded from Arrow.com.

ACCESSORIES

SEALING PLUGS

to be mounted behind the crimp contacts

Contact size	Proprietary No	Military No
8 coax	900024	-
12	900023	MS27488-12-2
16	900020	MS27488-16-2
20	900021	MS27488-20-2
22D	900022	MS27488-22-2
23	900022	MS27488-22-2

DUMMY CONTACTS

to be mounted instead of the contacts

Contact size	Dummy contact material	Proprietary No
4	White plastic	900329
8	Green plastic	900488
8	Brass + gold finish	900183
8	White plastic	900029
12	Brass + gold finish	900025
12	White plastic	900486
16	Brass + gold finish	900028
16	Blue plastic	900026
20	Brass + gold finish	900332

Metal dummy contacts are recommended for applications requesting EMI protection.

STANDARD PC TAIL CONTACTS

	Contact size	Type	Pin contacts		Socket contacts	
			Tail dimension (mm)	Proprietary No	Tail dimension (mm)	Proprietary No
Signal	12	CI	5	900238	5	900403
	16	CI	5	900240	5	900263
		LI	8.5	900246	8.5	-
	20	CI	5	900241	5	900251
		LI	8.5	900243	8.5	900252
	22D	CI	5	900245	5	900256
		LI	8.5	922389	8.5	922390
	23	CI	5	900458	5	900459
Coax	12	-	consult us	900489	-	-
		-	consult us	900409	-	-
	16	-	consult us	900184**	consult us	900405
Twinax	8	-	consult us	072265	-	-

** 900179 = 900184 + tin plating

Other PC tail lengths are available, please consult us.

Downloaded from Arrow.com.

ACCESSORIES

REDUCING FERRULES

Reducing ferrules allow using cables with smaller diameters than specified in the table page 7.

Reducing ferrule No	Contact size	Wire Gauge	Pin contacts	Socket contacts
No reducing ferrule	8	8	900197 / 900198	900217
900154		10		
No reducing ferrule	12	12 14 16	900005	900045
900092		16 18 20		
900093		20 22 24		
No reducing ferrule	16	16 18 20 22	900000	900040
900091		24 26 28		
No reducing ferrule	20	20 22 24	900001	900041
900090		26 28		
900094	22D	34	90004	900044
900099		30		
No reducing ferrule		22 24 26 28		

The sealing of mated connectors is only guaranteed for the minimum wire outside diameter given in the table page 7.

Downloaded from Arrow.com.

APPLICATION TOOLS

CRIMPING TOOLS

Contact size	Contact type	Contact part number		Crimping tool		Positioner	
		Proprietary No	Military No	Proprietary No	Military No	Proprietary No	Military No
00		Refer to datasheet E122					
4	P	900007	-	809947	-	809948	-
	S	900047	-	809947	-	809948	
8 Coax		Inner pin & socket		809 801	M22520/2-01	-	M22520/2-31
		Outer pin & socket		809 914	M22520/5-01	809 915	M22520/5-41
8 Power	P	900 197	-	809 872	-	809 873	-
	P	900 198	-	809 872	-	809 873	-
	S	900 217	-	809 872	-	809 873	-
12 Coax		Inner pin & socket		809 801	M22520/2-01	809 932	M22520/2-34
		Outer pin & socket		809 926	M22520/31-01	809 927	M22520/31-02
12	P	900 005	M39029/58-365	809 857	M22520/1-01	809 858	M22520/1-04
	S	900 045	M39029/56-353	809 857	M22520/1-01	809 858	M22520/1-04
16 Coax		Inner pin & socket		809 801	M22520/2-01	809 862	M22520/2-35
		Outer pin & socket		809 863	M22520/4-01	809 864	M22520/4-02
16	P	900 000	M39029/58-364	809 857	M22520/1-01	809 858	M22520/1-04
	S	900 040	M39029/56-352	809 857	M22520/1-01	809 858	M22520/1-04
20	P	900 001	M39029/58-363	809 857	M22520/1-01	809 858	M22520/1-04
				809 801	M22520/2-01	809 826	M22520/2-10
	S	900 041	M39029/56-351	809 857	M22520/1-01	809 858	M22520/1-04
				809 801	M22520/2-01	809 826	M22520/2-10
22D	P	900 004	M39029/58-360	809 801	M22520/2-01	809 810	M22520/2-09
	S	900 044	M39029/56-348	809 801	M22520/2-01	809 835	M22520/2-07
23	P	900 049	M39029/18-177	809801	M22520/2-01	-	M22250/2-13
	S	900 048	M39029/17-172	809801	M22520/2-01	-	M22250/2-16

INSERTION AND REMOVAL TOOLS

Plastic tools

Contact size	Insertion tool		Removal tool		Colour	
	Proprietary No	Military No	Proprietary No	Military No	Insertion	Extraction
8 Power/coax	*	*	-	M81969/14-12	-	green
12	809 859	M81969/14-04	809 859	M81969/14-04	yellow	white
16	809 855	M81969/14-03	809 855	M81969/14-03	blue	white
20	809 854	M81969/14-10	809 854	M81969/14-10	red	orange
22D	809 856	M81969/14-01	809 856	M81969/14-01	green	white

* Manual insertion

Metallic tools

Contact size	Straight type		Angle type			
	Insertion tools Proprietary No	Removal tools Proprietary No	Insertion tools		Removal tools	
			Proprietary No	Military No	Proprietary No	Military No
4	*	809943	-	-	-	-
8 Power/coax	-	809961	*	*	809 845	-
12	-	-	809 838	M81969/8-09	809 839	M81969/8-10
16	809 816	809 846	809 812	M81969/8-07	809 820	M81969/8-08
20	809 817	809 847	809 813	M81969/8-05	809 821	M81969/8-06
22D	809 819	809 849	809 815	M81969/8-01	809 823	M81969/8-02
23	810 010	810 010	-	-	-	-

* Manual insertion

Downloaded from Arrow.com.

BACKSHELLS

SHIELDING	
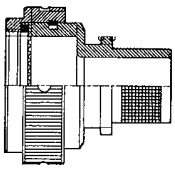	**TV-35: BAND BACKSHELL FOR SHIELDING** • Full 360° shield termination • Available with different cabling chambers • Easy maintenance or repairability • Sealing ensured by straight or right angled heat-shrink molded piece • Right angle version: TV SBC
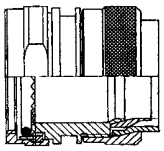	**TV NSA: HIGH LEVEL OF EMI/RFI PROTECTION** • Electrical continuity between cable and connector by clamping the braid with a screwing system • Free inner ring to avoid twisting of the braid when screwing • Sealing ensured by straight or right angle heat-shrink molded piece
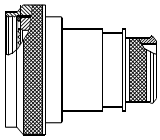	**M85049/88: BAND LOCK ADAPTOR** • MIL standardized band backshell • Full 360° termination • Sealing ensured by straight or right angle heat-shrink molded piece • Right angle and 45° versions available
SEALING	
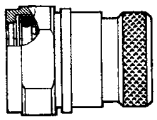	**TV NSD: ADAPTER FOR HEAT-SHRINK MOLDED PIECE**
MECHANICAL RETENTION	
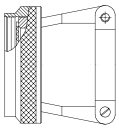	**M85049/38 - M85049/38S: STRAIN RELIEF CLAMP** • MIL standardized strain relief clamp • Mechanical retention of the cable • Easy maintenance or repairability • Self locking option available
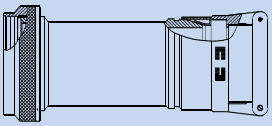	**M85049/19: NON-ENVIRONMENTAL EMI/RFI BACKSHELL** • 360° screen termination • Strain relief cable holding mechanism

For more detailed information, consult our Backshell catalog (E118)

Downloaded from Arrow.com.

HOW TO ORDER

AMPHENOL DESIGNATION - COMPOSITE AND METALLIC VERSIONS

Series	TV	P00	R	G	W		11-35	P	A	-	-

TV: Metallic shell
CTV: Composite shell

Shell type
Square flange receptacle: 175°C (O.D. cadmium): **P00** 200°C (nickel, s. steel, bronze): **PS00**
Jam nut receptacle: 175°C (O.D. cadmium): **07** 200°C (nickel, s. steel, bronze): **S07**
Straight plug: 175°C (O.D. cadmium): **06** 200°C (nickel, s. steel, bronze): **S06**

Contact type
R: Crimp contacts (or connector delivered without contact)
Omit for PC tail contacts and Durmalon plating

Ground Plane receptacle and Quadrax contact options
G: conductive insert
Q: insert compatible with quadrax or differential twinax contacts**
GQ: conductive insert compatible with quadrax or differential twinax contacts
Omit for standard receptacle (without conductive insert) and insert without quadrax contact

Class
W: Olive Drab Cadmium plating (on aluminium or composite)
F: Nickel Plating (on aluminium or composite)
K: Passivated Stainless Steel
S: Nickel plated Stainless Steel
B: Marine Bronze (copper aluminium alloy)
DT: Durmalon plating (Nickel - PTFE)

PC Tail Contacts
Omit for crimp contacts
CI: standard PCB contacts
LI: long tail PCB contacts

Shell size and Contact arrangement
See pages 8 to 11

Contact type
P: Pin (500 cycles)
S: Socket (500 cycles)
H: Pin (1500 cycles - CTV only)
J: Socket (1500 cycles - CTV only)

Polarization
Blank for normal or **A, B, C, D, E.** *See coding system on page 13*

Contacts
Omit for connectors delivered with contacts
LC: Connector delivered without contacts

Deviation
F404 / F404LF / F404LFC: Tinned PCB contacts (lead tinned / silver tinned / silver-copper tinned)
F485 (for TVS06 RB only): Coupling nut conforms to CECC75 - 201 - 002A (for arctic gloves)
F459 / F459LF / F459LFC: stand-off receptacle (lead tinned / silver tinned / silver-copper tinned)
For other deviations (FXXX), please *consult us*.

** For Quadrax or dif. Twinax compatible inserts, please omit the "S" corresponding to 200°C compatibility when applicable, in the P/N. Ex: CTV07RGQF17 52PLC
For receptacles delivered with PCB contacts, please consult us.
For other arrangements, shell, coding or deviation, please consult us.

Downloaded from Arrow.com.

HOW TO ORDER

MILITARY DESIGNATION - COMPOSITE AND METALLIC VERSIONS - CRIMP CONTACTS ONLY

Series JD38999/	20	F	H	53	P	A

Shell type
20: Square flange receptacle
24: Jam nut receptacle
26: Straight plug

Shell material and finish
Composite
J: Olive drab cadmium plated 175°C
M: Electroless nickel plated 200°C
Aluminium
W: Olive drab cadmium plated 175°C
F: Electroless nickel plated 200°C
Stainless steel
K: Passivated 200°C, firewall capability
S: Nickel plated 200°C, firewall capability

Shell size

A	B	C	D	E	F	G	H	J	MIL
09	11	13	15	17	19	21	23	25	Amphenol

Contact arrangement
See pages 8 to 11

Contact and connector type
A: Without pin contact
B: Without socket contact
P: With pin contacts
S: With socket contacts
H: With 1500 cycles pin contacts (only valid for composite)
J: With 1500 cycles socket contacts (only valid for composite)

Polarization
N for normal or **A, B, C, D, E.** *See coding system on page 13*

EN3645 (EUROPEAN NORM ORDERING INFORMATION, ASD-STAN) -CRIMP CONTACTS ONLY

Standard number EN3645	F	0	G	N	16	A	N

Class:
W: Crimp version, Aluminum Olive drab cadmium plated, 175°C
F: Crimp version, Aluminum Nickel plated, 200°C
J: Crimp version, Composite material Olive Drab cadmium plated, 175°C
M: Crimp version, Composite material Nickel plated, 175°C
K: Crimp version, Passivated Stainless Steel, 200°C

Shell style:
0: Square flange receptacle
7: Jam Nut Receptacle
6: Plug

Shell size code:
A for 09, **B** for 11, **C** for 13, **D** for 15, **E** for 17, **F** for 19, **G** for 21, **H** for 23, **J** for 25

Insert type:
N: standard
G: Grounded cavities
Q: Quadrax insert, grounded
L: Quadrax insert, non grounded

Contact arrangement according to EN3645-002:
See page 8 to 11

Contact code:
M: with Pin contacts **F:** with Socket contacts
A: without Pin contacts **B:** without Socket contacts

Polarization (Key Ways rotation):
N, A, B, C, D, E. *See coding system on page 13*

Downloaded from Arrow.com.

HOW TO ORDER

AMPHENOL DESIGNATION - HERMETIC VERSIONS

Series TV	SI	YN	11	35	P	-

Shell type
PS02: Square flange receptacle
S07: Jam nut receptacle
SI: Solder mounting receptacle

Shell material and finish
Y: Stainless steel passivated
YN: Stainless steel nickel plated

Shell size:
09/11/13/15/17/19/21/23/25

Contact arrangement
See pages 8 to 11 (insert arrangements marked with "Y")

Contact type
P: Pin

Polarization
Blank for normal or **A, B, C, D, E.** *See coding system on page 13.*

MILITARY DESIGNATION - HERMETIC VERSIONS

Connector type JD38999/	25	N	B	35	P	N

Shell type
21: Square flange receptacle
23: Jam nut receptacle
25: Solder mounting receptacle

Shell material and finish
Y: Stainless steel passivated
N: Stainless steel nickel plated

Shell size

A	B	C	D	E	F	G	H	J	MIL
09	11	13	15	17	19	21	23	25	Amphenol

Contact arrangement
See pages 8 to 11 (insert arrangements marked with "Y")

Contact type
P: Pin.

Polarization
N for normal or **A, B, C, D, E.** *See coding system on page 13*

EN3645 (EUROPEAN NORM ORDERING INFORMATION, ASD-STAN)

FOR INFORMATION ONLY - Amphenol is not qualified

Standard number	EN3645	Y0	G	N	35	M	N

Shell style:
Y0: Hermetic square flange receptacle, Stainless steel 200°C
Y1: Hermetic round flange receptacle attached by soldering, Stainless steel 200°C
Y7: Hermetic jam nut receptacle, Stainless steel 200°C

Shell size code:
A for 09, **B** for 11, **C** for 13, **D** for 15, **E** for 17, **F** for 19, **G** for 21, **H** for 23, **J** for 25

N for standard insert type

Contact arrangement according to EN3645-002:
See page 8 to 11 (except arrangements containing coaxial or triaxial contacts)

Contact code:
M: Pin with solder cup
A: Pin with eyelet

Polarization (Key Ways rotation):
N, A, B, C, D, E. *See coding system on page 13*

Downloaded from Arrow.com.

HOW TO ORDER

AMPHENOL DESIGNATION - MIL-STD-1760 LANYARD RELEASE PLUGS

LOW PROFILE VERSION

Series TV	FB	RW	25-11	P	E
FB: MIL-STD-1760 lanyard release plug					
RW: Olive drab cadmium plated					
Arrangement **25-11, 25-20:** *see pages 11 and 13*					
Contact type and polarization **G:** 25-11 arrangement, pin contacts only **P:** 25-20 arrangement, pin contacts only					
Lanyard length Other lengths are available upon request. *See table A on page 25.*					

MILITARY DESIGNATION - MIL-STD-1760 LANYARD RELEASE PLUGS

LOW PROFILE VERSION

Series JD38999/	31	W	E	11	N	1
Shell and contact type **31:** Plug with pin contacts, per MIL-STD-1760						
Shell finish **W:** Olive drab cadmium plated 175°C						
Lanyard length. *See table A on page 25.*						
Contact arrangement **11:** 25-11 arrangement **20:** 25-20 arrangement						
Polarization **N** for 25-20 arrangement. *See coding on page 13.* **A** for 25-11 arrangement.						
Plug locking ring type **1:** Ø 51mm (low profile) **2:** Ø 68mm (please consult us)						

For MIL-STD-1760 Type II connectors, please consult us.

Downloaded from Arrow.com.

HOW TO ORDER

AMPHENOL DESIGNATION - LANYARD RELEASE PLUGS

STANDARD VERSION

Shell finish **88:** Olive-drab cadmium plated **91:** Nickel plated	**88**	**5565**	**20**	**K**	**P**
Connector type					
Shell size and arrangement code *See table I on page 26* Others, please consult us					
Lanyard length A to Z code *(see table III on page 26)*					
Contact type and polarization *See chart below and coding on page 13.*					

POLARIZATION

MS Code	Socket contact Amphenol code	MS Code	Pin contact Amphenol code
SN	S (normal)	PN	P (normal)
SA	H	PA	G
SB	J	PB	I
SC	L	PC	K
SD	N	PD	M
SE	T	PE	R

MILITARY DESIGNATION - LANYARD RELEASE PLUGS

STANDARD VERSION

Connector type **JD38999/**	**29**	**W**	**D**	**35**	**E**	**N**
Shell and contact type **29:** Plug with pin contacts **30:** Plug with socket contacts						
Shell finish **W:** Olive drab cadmium plated **F:** Nickel plated						
Shell size **A* B C D E F G H J** MIL 09* 11 13 15 17 19 21 23 25 Amphenol * Please consult us						
Contact arrangement *See table I on page 26.*						
Lanyard length A to Z code *(see table III on page 26)*						
Polarization N for normal or A, B, C, D, E. *See coding on page 13.*						

Downloaded from Arrow.com.

HOW TO ORDER

EN3645 (EUROPEAN NORM ORDERING INFORMATION, ASD-STAN) - LANYARD RELEASE PLUGS

FOR INFORMATION ONLY - Amphenol is not qualified

Standard number	EN3645	W	8	G	N	35	A	N	F

Class:
W: Crimp version, Aluminum Olive drab cadmium plated, 175°C
F: Crimp version, Aluminum Nickel plated, 200°C

Shell style:
8: Lanyard Release Plug Type 1
9: Lanyard Release Plug Type 2 (Class W only, Shell size J and contact arrangement 20 only)

Shell size code:
A for 09, **B** for 11, **C** for 13, **D** for 15, **E** for 17, **F** for 19, **G** for 21, **H** for 23, **J** for 25

Insert type:
N: standard
G: Grounded cavities

Contact arrangement according to EN3645-002:
See page 8 to 11

Contact code:

M: with Pin contacts **F:** with Socket contacts

A: without Pin contacts **B:** without Socket contacts

Polarization (Key Ways rotation):
N, A, B, C, D, E.

Code for lanyard length

Code	A	B	C	D	E	F	G	H	I	J	K	L	M	N	P	R	S	T	U	V	W	X	Y	Z
L ± 6	102	115	127	140	153	166	178	191	203	216	229	242	254	267	280	293	305	318	331	356	381	407	432	458

Downloaded from Arrow.com.

CROSS REFERENCES

Shell material	MIL-DTL-38999 Series III	EN 3645	AMPHENOL
Composite shell	JD38999/20J X XX A °	EN3645 J0 X N XX A °	CTVP00RW ■■ ## P ^ LC
			CTVP00WCI ■■ ## P ^ LC
			CTVP00WDW ■■ ## P ^ LC
		EN3645 J0 X L XX A °	CTVP00RQW ■■ ## P ^ LC
		EN3645 J0 X Q XX A °	CTVP00RGQW ■■ ## P ^ LC
	JD38999/20M X XX A °	EN3645 M0 X N XX A °	CTVPS00RF ■■ ## P ^ LC
			CTVPS00FCI ■■ ## P ^ LC
			CTVPS00FDW ■■ ## P ^ LC
		EN3645 M0 X L XX A °	CTVP00RQF ■■ ## P ^ LC
		EN3645 M0 X Q XX A °	CTVP00RGQF ■■ ## P ^ LC
	JD38999/24J X XX A °	EN3645 J7 X N XX A °	CTV07RW ■■ ## P ^ LC
			CTV07WCI ■■ ## P ^ LC
			CTV07WDW ■■ ## P ^ LC
		EN3645 J7 X L XX A °	CTV07RQW ■■ ## P ^ LC
		EN3645 J7 X Q XX A °	CTV07RGQW ■■ ## P ^ LC
	JD38999/24M X XX A °	EN3645 M7 X N XX A °	CTVS07RF ■■ ## P ^ LC
			CTVS07FCI ■■ ## P ^ LC
			CTVS07FDW ■■ ## P ^ LC
		EN3645 M7 X L XX A °	CTV07RQF ■■ ## P ^ LC
		EN3645 M7 X Q XX A °	CTV07RGQF ■■ ## P ^ LC
	JD38999/26J X XX A °	EN3645 J6 X N XX A °	CTV06RW ■■ ## P ^ LC
		EN3645 J6 X L XX A °	CTV06RQW ■■ ## P ^ LC
	JD38999/26M X XX A °	EN3645 M6 X N XX A °	CTVS06RF ■■ ## P ^ LC
		EN3645 M6 X L XX A °	CTV06RQF ■■ ## P ^ LC
Aluminium shell	JD38999/20W X XX A °	EN3645 W0 X N XX A °	TVP00RW ■■ ## P ^ LC
			TVP00WCI ■■ ## P ^ LC
			TVP00WDW ■■ ## P ^ LC
		EN3645 W0 X L XX A °	TVP00RQW ■■ ## P ^ LC
		EN3645 W0 X Q XX A °	TVP00RGQW ■■ ## P ^ LC
	JD38999/20F X XX A °	EN3645 F0 X N XX A °	TVPS00RF ■■ ## P ^ LC
			TVPS00FCI ■■ ## P ^ LC
			TVPS00FDW ■■ ## P ^ LC
		EN3645 F0 X L XX A °	TVP00RQF ■■ ## P ^ LC
		EN3645 F0 X Q XX A °	TVP00RGQF ■■ ## P ^ LC
	JD38999/24W X XX A °	EN3645 W7 X N XX A °	TV07RW ■■ ## P ^ LC
			TV07WCI ■■ ## P ^ LC
			TV07WDW ■■ ## P ^ LC
		EN3645 W7 X L XX A °	TV07RQW ■■ ## P ^ LC
		EN3645 W7 X Q XX A °	TV07RGQW ■■ ## P ^ LC
	JD38999/24F X XX A °	EN3645 F7 X N XX A °	TVS07RF ■■ ## P ^ LC
			TVS07FCI ■■ ## P ^ LC
			TVS07FDW ■■ ## P ^ LC
		EN3645 F7 X L XX A °	TV07RQF ■■ ## P ^ LC
		EN3645 F7 X Q XX A °	TV07RGQF ■■ ## P ^ LC
	JD38999/26WX XX A °	EN3645 W6 X N XX A °	TV06RW ■■ ## P ^ LC
		EN3645 W6 X L XX A °	TV06RQW ■■ ## P ^ LC
	JD38999/26F X XX A °	EN3645 F6 X N XX A °	TVS06RF ■■ ## P ^ LC
		EN3645 F6 X L XX A °	TV06RQF ■■ ## P ^ LC
Stainless Steel shell	JD38999/20K X XX A °	EN3645 K0 X N XX A°	TVPS00RK ■■ ## P ^ LC
			TVPS00KCI ■■ ## P ^ LC
			TVPS00KDW ■■ ## P ^ LC
	JD38999/20S X XX A °		TVPS00RS ■■ ## P ^ LC
			TVPS00SCI ■■ ## P ^ LC
			TVPS00SDW ■■ ## P ^ LC
	JD38999/24K X XX A °	EN3645 K7 X N XX A°	TVS07RK ■■ ## P ^ LC
			TVS07KCI ■■ ## P ^ LC
			TVS07KDW ■■ ## P ^ LC
	JD38999/24S X XX A °		TVS07RS ■■ ## P ^ LC
			TVS07SCI ■■ ## P ^ LC
			TVS07SDW ■■ ## P ^ LC
	JD38999/26K X XX A °	EN3645 K6 X N XX A°	TVS06RK ■■ ## P ^ LC
	JD38999/26S X XX A °		TVS06RS ■■ ## P ^ LC
Hermetic receptacles	JD38999/21Y X XX P °	EN3645 Y0 X N XX M°	TVPS02Y ■■ ## P ^
	JD38999/21N X XX P °		TVPS02YN ■■ ## P ^
	JD38999/23Y X XX P °	EN3645 Y7 X N XX M°	TVS07Y ■■ ## P ^
	JD38999/23N X XX P °		TVS07YN ■■ ## P ^
	JD38999/25Y X XX P °	EN3645 Y1 X N XX M°	TVSIY ■■ ## P ^
	JD38999/25N X XX P °		TVSIYN ■■ ## P ^
Dust caps	JD38999/32W X R	EN3645 W4 X 0	BF R TV W ■■
	JD38999/32W X N	EN3645 W4 X 7	BF RO TV W ■■
	JD38999/33W X R	EN3645 W3 X 0	BEC R TV W ■■
	JD38999/33W X N	EN3645 W3 X 7	BER R TV W ■■
Dummy receptacle	JD38999/22X W	EN3645 W5 X	SE00 TV W ■■

As example, male version without contact (except for bronze and hermetic male versions with contacts).

Caption	MIL-DTL-38999 Series III P/N	EN3645	AMPHENOL P/N
Shell size	X	X	■■
Insert arrangement	XX	XX	##
Polarization, rotation of secondary keyways	°	°	^

Downloaded from Arrow.com.

NOTES

Downloaded from Arrow.com.

Amphenol in the world

NORTH AMERICA

Amphenol Pcd, Inc.
72 Cherry Hill Drive
Beverly, MA. 01915 - USA
Telephone: +1-978-624-3400
info@amphenolpcd.com

Amphenol AEROSPACE OPERATIONS
40-60 Delaware Street - Sidney,
New York 13838-1395 - USA
Telephone: +1-607-563-5011
Fax: +1-607-563-5157

Amphenol BACKPLANE SYSTEMS
18 Celina Avenue - Nashua,
New Hampshire 03063 - USA
Telephone: +1-603-883-5100
Fax: +1-603-883-0171

Amphenol CANADA CORPORATION
605 Milner Avenue - Toronto, Ontario
Canada M1B 5X6
Telephone: +1-416-291-4401
Fax: +1-416-292-0647

Amphenol FSI
1300 Central Expwy N, Suite 100 Allen,
TX 75013 - USA
Toll-Free: +800-472-4225 - Fax: +214-547-9344
info@fibersystems.com

Amphenol TCS
44 Simon Street
Nashua, NH 03060
Telephone: +1 603-879-3000
www.amphenol-tcs.com

EUROPE

Amphenol AIR LB
10 Rue Champ Raymond
08110 Carignan - France
Telephone: +33-3-2422-3270
Fax: +33-3-2422-387

Amphenol AIR LB GmbH
Am Kleinbahnhof 4 - 66740 Saarlouis - Germany
Telephone: +49-6831-981-00
Fax: +49-6831-981-030

Amphenol BENELUX
Zadelmaker 121 NL - 2401 PD Alphen aan den Rijn
The Netherlands
Telephone: +31-172-444-903
Fax: +31-172-240-254

Amphenol IBERICA
Edificio "Burgosol"
c/Comunidad de Madrid, 35 bis Oficina No 55
ES - 28230 Las Rozas - Madrid - Spain
Telephone: +34-91-640-73-02/03/04
Fax: +34-91-640-73-07

Amphenol ITALIA
Via Barbaiana n.5, 20020 Lainate - Milano - Italy
Telephone: +39-02-93254-1
Fax: +39-02-93254-444

Amphenol LIMITED
Thanet Way, Whitstable - Kent, CT5 3JF
United Kingdom
Telephone: +44-1227-773-200
Fax: +44-1227-276-571

Amphenol MIDDLE & EASTERN EUROPE
Wiener gase 68 - 2380 Perchtoldsdorf - Austria
Telephone: +43-699-10396-071
Fax: +43-699-40396-071

SEFEE
ZI des Cazes - BP 243
12403 Saint Affrique - France
Telephone: +33-5-6598-1100
Fax: +33-5-6549-3712

Amphenol SCANDINAVIA
Ängsullsvägen 7 - S-187 51 Täby - Sweden
Telephone: +46-702-12-92-00
Fax: +46-702-63-46-77

Amphenol SOCAPEX
948 Promenade de l'Arve - BP29
74311 Thyez Cedex - France
Telephone: +33-4-5089-2800
Fax: +33-4-5096-1941

Amphenol SOUTH EASTERN EUROPE
948 Promenade de l'Arve - BP29
74311 Thyez Cedex - France
Telephone: +33-4-5089-2840
Fax: +33-4-5096-1941

ASIA

Amphenol DAESHIN
558 Sosa, SongNea
Bucheon-city, Kyunggi-Do
Korea 420-130
Telephone: +82-32-610-3800
Fax: +82-32-673-2507/665-6219

Amphenol INTERCONNECT INDIA PRIVATE LIMITED
105 Bhosari Industrial Area
Pune 411 026 - India
Telephone: +91-20-712-0363/0463/0155
Fax: +91-20-712-0581

Amphenol JAPAN
689-1, Iseochi
Ritto-shi Shiga 520-3044 - Japan
Telephone: +81-77-553-8501
Fax: +81-77-551-2200

Amphenol PCD CO.LTD
2/F Building A5,
Huafeng Technology Park
Guan Tian, Bei Huan Road,
Shi Yan Street
BaoAn District, Shenzhen,
China 518132
Tel: +86-755-8173-8281
Fax: +86-755-8173-8180
www.amphenolpcd.com.cn

OTHER AREAS

Amphenol ARGENTINA
Av. Callao 930 2do piso Oficina B "Plaza"
C1023 - AAP Buenos Aires - Argentina
Telephone: +54-11-4815-6886
Fax: +54-11-4814-5779

Amphenol AUSTRALIA PTY LIMITED
2 Fiveways Blvd, Keysborough
Melbourne, Victoria 3173 - Australia
Telephone: +61-3-8796-8888
Fax: +61-3-8796-8801

BAR TEC LTD
4 Hagavish St, PO Box 279
Kfar Saba 44102 - Israel
Telephone: +972-9-767-4097
Fax: +972-9-767-4324

Amphenol DO BRAZIL
Rua Diogo Moreira,132, 20 andar, rooms 2001-2-3
CEP: 05423-010 Sao Paulo SP - Brazil
Telephone: +55-11-3815-1003
Fax: +55-11-3815-1629

Amphenol MEXICO
Prolongacion Reforma 61 - 6 B2
Col. Paseo de las Lomas - C.P.013130 - Mexico
Telephone: +52-55-5258-9984
Fax: +52-55-5081-6890

Amphenol RUSSIA
8 bldg., 2 Yaroslavskaja Street,
129164 Moscow - Russia
Telephone: +7-495-937-6341
Fax: +7-495-937-6319

Amphenol SOUTH AFRICA
30 Impala Road
2196 Chislehurston-Sandton - South Africa
Telephone: +27-11-783-9517
Fax : +27-11-783-9519

Amphenol TURKEY
Ayazaga Mah. Meydan Sok
No:28 Beybi Giz Plaza Kat:26
34396 Maslak - Istanbul / Turkey
Telephone: +90-212-335-25-01
Fax: +90-212-335-25-00

Amphenol

The information given in this document are **as a guideline only.**
We reserve the right to **modify our products** in any way we deem necessary.
Any duplication is **prohibited**, unless approved in writing.
Design by **shinylab.com** • June 2010
Gestion & Edition by **AMPHENOL** & **COMALYON**

Your local Contact:

E113H / DOC-000035-ANG-H

For more information, please visit our website:
www.38999-solutions.com

Downloaded from Arrow.com.