PRODUCT No	DIM A	DIM B	HOUSING MATERIAL	CONTACT PLATING	REMARKS
66010-001/-001LF	4.57 $^{+.64}_{-1.40}$/.180 $^{+.025}_{-.055}$	3.81 $^{+1.40}_{-.64}$/.150 $^{+.055}_{-.025}$	SUPER TOUGH NYLON UL 94V-0 GRAY	.76m /30m "AU OVER 2.5m /100m "NI	
66010-002/-002LF	4.45±0.38/.175±.015	4.45±0.38/.175±.015		.76m /30m "AU OVER 2.5m /100m "NI	
~~66010-003~~	~~3.00±0.30/.118±.012~~	~~3.00±0.30/.118±.012~~		~~76m /30m "AU OVER 2.5m /100m "NI~~	~~MADE FROM 66010-001 OR -002~~
66010-004/-004LF	4.57 $^{+.64}_{-1.40}$/.180 $^{+.025}_{-.055}$	3.81 $^{+1.40}_{-.64}$/.150 $^{+.055}_{-.025}$		.76m /30m "GXT	
66010-005/-005LF	4.57 $^{+.64}_{-1.40}$/.180 $^{+.025}_{-.055}$	3.81 $^{+1.40}_{-.64}$/.150 $^{+.055}_{-.025}$	SUPER TOUGH NYLON UL 94V-0 GRAY	.76m /30m "AU OVER 2.5m /100m "NI	
66010-006/-006LF	4.57 $^{+.64}_{-1.40}$/.180 $^{+.025}_{-.055}$	3.81 $^{+1.40}_{-.64}$/.150 $^{+.055}_{-.025}$	SUPER TOUGH NYLON UL 94V-0 BLACK	.76m /30m "GXT	

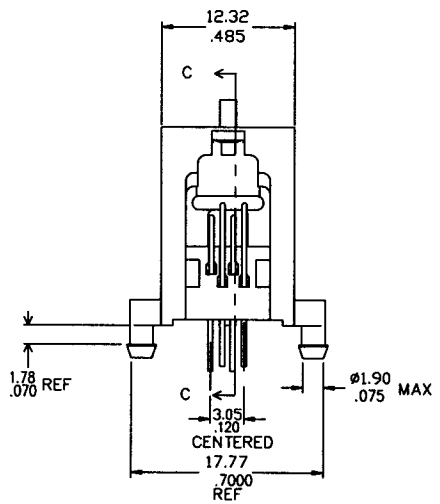

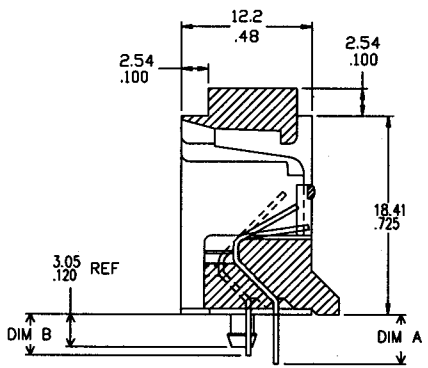

SECTION C-C

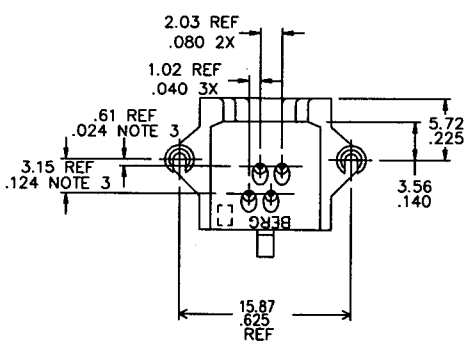

NOTES:

1. FOR VISUAL, MECHANICAL AND FUNCTIONAL REQUIREMENTS SEE SPECIFICATION BUS-12-084.
2. GOLD WIRE MAIERIAL: PHOS BRONZE ALLOY. UNS-C51000, 135-150M PSI TENSILE PLATING: SEE TABLE
3. DIMENSIONAL TOLERANCE: ±.25/±.010 AT BASE ±.64/±.025 AT TIP
4. FOR ADDITIONAL APPLICATION AND MOUNTING INFORMATION SEE DRAWING TA-390.
5. HOUSING MATERIAL: SEE TABLE.
6. TEST METHOD PER UL-1863. SECTION 22.2
7. THE PRODUCT MEETS EUROPEAN UNION DIRECTIVES AND OTHER COUNTRY REGULATIONS AS DESCRIBED IN GS-22-008.
8. THE HOUSING WILL WITHSTAND EXPOSURE TO 260°C PEAK TEMPERATURE FOR 10 SECONDS IN A WAVE SOLDER APPLICATION WITH A 1.60mm MINIMUM THICK CIRCUIT BOARD.
9. IF LF P/N PACKAGING MEETS GS-14-920 SPECIFICATION.

mat'l. code				tolerances unless otherwise specified			CUSTOMER COPY	FCI electronics www.fciconnect.com
ltr	ecn no	dr	date		.0 ± 0.25			
P	T10097	KC	06/11/91	linear	.00 ± 0.13		projection	title BERG MOD JACK ASSY 616 PCB
R	T20048	KC	03/14/92		.000± 0.05			
S	T30286	TC	09/13/93	angles	± 2°			
T	T66059	C L	02/13/96	dr	KCHOU	09/14/93	MM/INCH	product family MOD JACK / code TWN
U	T80392	C C	02/22/01	engr	TONY CHIEN	09/14/93		size A3 / dwg no 66010
V	N05-0035	YS	02/16/05	chr	TONY CHIEN	09/14/93	scale 2.5 : 1	sheet 1 of 1
				appd	JENN TSAO	09/14/93		
sheet index	revision	V						
	sheet	1						

form no. 7530-001-104

All rights strictly reserved. Reproduction or loan to third parties in any form whatsoever is not permitted without prior written authority from the proprietor. Property of © FCI ELECTRONICS. Copyright 2006 FCI ELECTRONICS bv

PDM: Rev:V STATUS:Released Printed: Mar 09, 2007

PDM: Rev:V STATUS:Released Printed: Jan 15, 2010

Downloaded from Arrow.com.