© 2021 TE Connectivity. All Rights Reserved.

REVISIONS					
P	LTR	DESCRIPTION	DATE	DWN	APVD
	1	PRELIMINARY	16DEC2020	DV	PS
	A	PRODUCTION RELEASE	28APR2021	SS	PS
	A1	NOTE 7 ADDED	23SEP2021	SS	PS

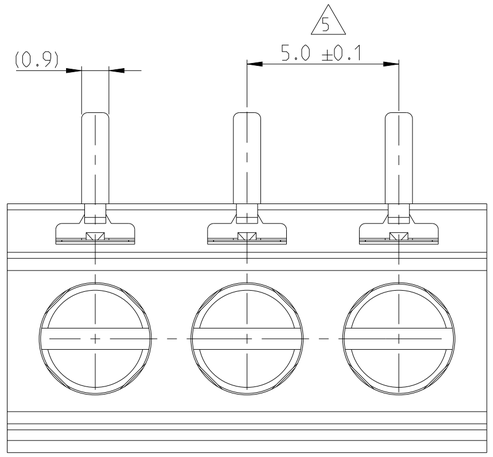

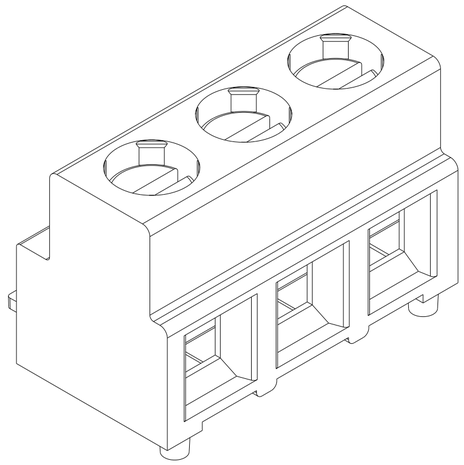

2383938-3 AS SHOWN

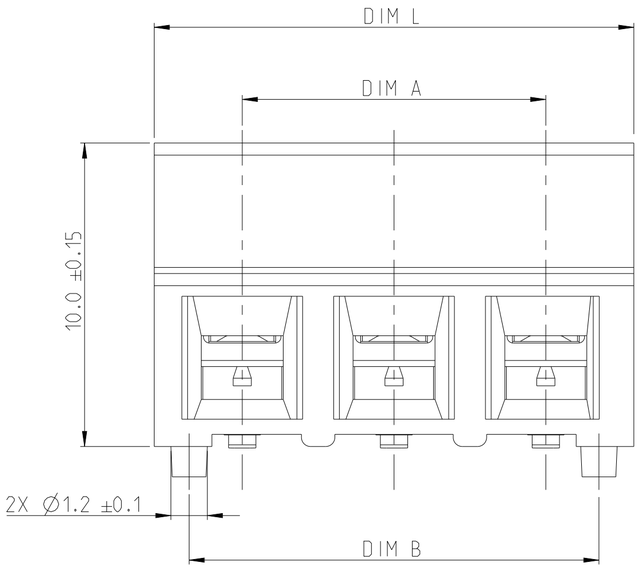

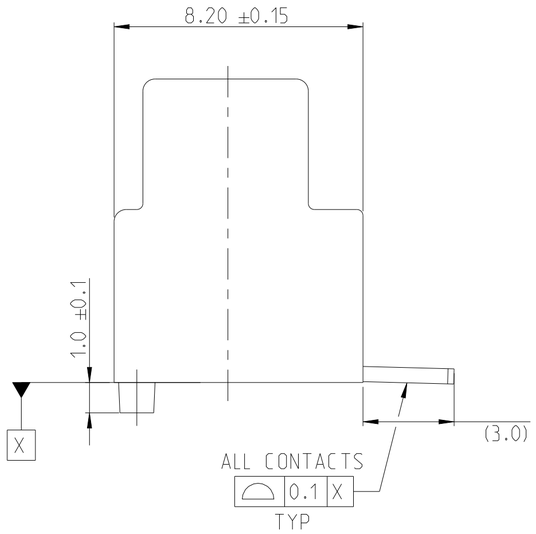

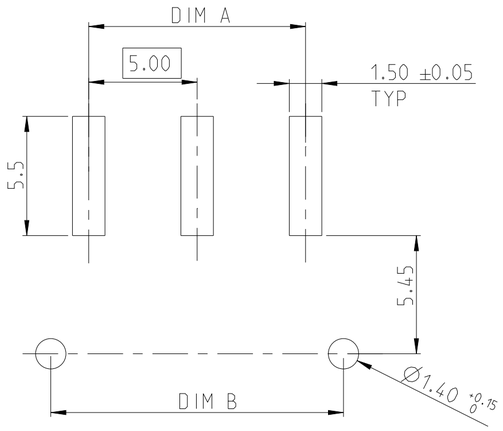

RECOMMENDED PCB LAYOUT

NOTES

1. MATERIALS & FINISH
   - HOUSING : HIGH TEMPERATURE PA, UL94 V0, COLOR -BALCK
   - SCREW M3 : COPPER ALLOY, NICKEL PLATED
   - CLAMP : COPPER ALLOY, NICKEL PLATED
   - CONTACT : COPPER ALLOY, NICKEL & TIN PLATED

2. MECHANICAL
   - WIRE STRIPPING LENGTH : 5-6 mm
   - RECOMMENDED/HIGHEST TIGHTENING TORQUE : 0.5/0.6 Nm.

3. ELECTRICAL
   - WIRE RANGE : 16 - 30 AWG
   - MAX. VOLTAGE : 300 V
   - MAX CURRENT : 13.5 A
   - CONTACT RESISTANCE : <15 m Ohm
   - INSULATION RESISTANCE : >1000 M Ohm (500V DC)

4. OPERATING TEMPERATURE RANGE: -40 °C TO +105 °C

5. NOT CUMULATIVE TOLERANCE.

6. SCREW CLAMP WILL BE IN CLOSED CONDITION.

7. PACKAGING SPEC: 107-160084

DIM A		DIM B		DIM L		POSITION	TE PN
55.00	±0.25	58.5	±0.25	60.80	±0.25	12	1-2383938-2
50.00	±0.20	53.5		55.80		11	1-2383938-1
45.00		48.5	±0.20	50.80		10	1-2383938-0
40.00		43.5		45.80	±0.20	9	2383938-9
35.00		38.5		40.80		8	2383938-8
30.00		33.5		35.80		7	2383938-7
25.00		28.5		30.80		6	2383938-6
20.00		23.5		25.80		5	2383938-5
15.00	±0.15	18.5		20.80		4	2383938-4
10.00		13.5	±0.15	15.80	±0.15	3	2383938-3
5.00	±0.10	8.5		10.80		2	2383938-2

THIS DRAWING IS A CONTROLLED DOCUMENT.

DIMENSIONS: mm

TOLERANCES UNLESS OTHERWISE SPECIFIED:
0 PLC ±
1 PLC ±0.3
2 PLC ±0.25
3 PLC ±
4 PLC ±
ANGLES ±

MATERIAL 1

FINISH 1

DWN DATTESH VERNEKAR 16DEC2020
CHK SUBHASREE SAHOO 18DEC2020
APVD PRASHANTH S 18DEC2020
PRODUCT SPEC 108-160231
APPLICATION SPEC -
WEIGHT -

TE Connectivity

NAME TERMINAL BLOCK, SMD MOUNT, 180 DEGREE, 5 mm PITCH

SIZE A2 | CAGE CODE 00779 | DRAWING NO C-2383938 | RESTRICTED TO

CUSTOMER DRAWING | SCALE 5:1 | SHEET 1 OF 1 | REV A1

1471-9 (3/13)

Downloaded from Arrow.com.