THIS DRAWING AND THE SUBJECT MATTER SHOWN THEREON ARE CONFIDENTIAL AND THE PROPERTY OF BEL/STEWART/TRP CONNECTOR AND SHALL NOT BE REPRODUCED, COPIED, OR USED IN ANY MANNER WITHOUT THE WRITTEN CONSENT OF TRP CONNECTOR.

PRODUCT MAY BE PROTECTED BY ONE OR MORE OF THE FOLLOWING US PATENTS:
5736910 5939955 6425781 6428361 6554638 6840817 7123117
7429195 7717749 7808751 6217391 6149050 7924130

REVISIONS

P	LTR	DESCRIPTION	DATE	DWN	APVD
	J	EC-1411035 COMPANY LOGO CHANGE	07JAN2015	HY	KZ

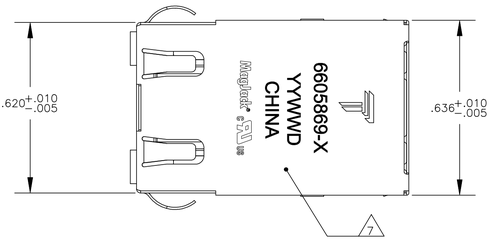

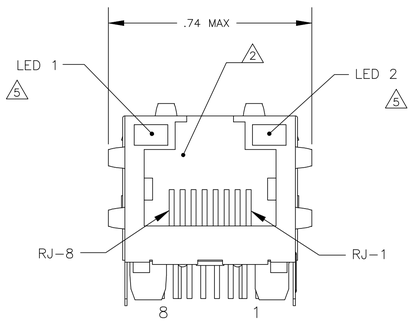

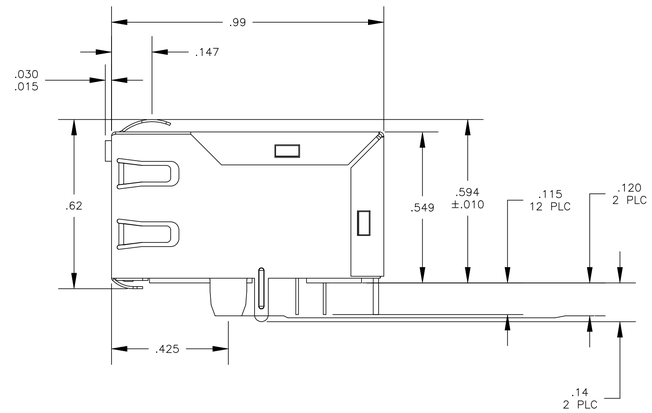

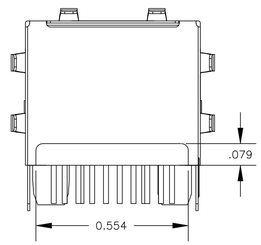

1. MATERIALS:
HOUSING - THERMOPLASTIC PET POLYESTER FLAMMABILITY RATING UL 94V-0.
SHIELD - .008" THICK, C26800 BRASS PREPLATED WITH 30µINCH MIN SEMI-BRIGHT NICKEL, SOLDER TABS POST-DIPPED WITH SAC SOLDER.
MOD JACK CONTACTS - .0157" x .018" PHOSPHOR BRONZE, 50µINCH MIN OVERALL NICKEL UNDERPLATE, WITH SELECT 50µINCH MIN HARD GOLD FINISH PLATE. SOLDERTAILS WITH 100µINCH MIN MATTE TIN AND/OR SAC SOLDER DIP
LIGHT EMITTING DIODE(LED) - DIFFUSED EPOXY LENS, .020" x .020" CARBON STEEL WIREFRAME LEADS PREPLATED WITH 80µINCH SILVER OVER 40µINCH NICKEL UNDERPLATE OVER 40µINCH COPPER UNDERPLATE; POST-PLATED WITH 100µINCH MIN MATTE TIN AND/OR SAC SOLDER DIP OR PURE TIN SOLDER DIP.

2. RJ45 JACK CAVITY CONFORMS TO FCC RULES AND REGULATIONS PART 68, SUB PART F.

3. MAGNETICS
-APPLICATION: 10/100 BASE-T
-IMPEDANCE: 100 OHMS
-TURNS RATIO (CHIP:CABLE): TX = 1:1, RX = 1:1
-OPEN CIRCUIT INDUCTANCE (OCL): 350µH MIN @100kHz, 0.1VRMS, 8mADC BIAS FROM 0°C TO 70°C, TX AND RX
-PERFORMANCE @ 25°C:
INSERTION LOSS (IL): 1.1dB MAX FROM 0.5MHz TO 100MHz
RETURN LOSS (RL): 18dB MIN FROM 0.5MHz TO 30MHz
18-20LOG(f/30)dB MIN FROM 30.1MHz TO 60MHz
12dB MIN FROM 60.1MHz TO 80MHz
CROSSTALK ATTENUATION: 35dB MIN FROM 0.5MHz TO 40MHz
33-20LOG(f/50)dB MIN FROM 40.1MHz TO 100MHz
COMMON MODE REJECTION RATIO (CMRR): 30dB MIN FROM 0.5MHz TO 100MHz
-ISOLATION VOLTAGE:2250VDC (MAX) FOR 60 SECONDS WITH A RISE TIME OF 500V/SEC.

4. OPERATING TEMPERATURE: FROM 0°C TO +70°C.

5. LEDS WITHOUT BUILT-IN RESISTOR
LEDS ARE DRIVEN WITH CONSTANT CURRENT AT APPROX 20 mA
LED COLOR: DOMINANT WAVELENGTH (λD): GREEN 568 nm TYP @ IF=20 mA
FORWARD VOLTAGE (VF): GREEN 2.2V TYP @ IF=20 mA
DOMINANT WAVELENGTH (λD): YELLOW 588 nm TYP @ IF=20 mA
FORWARD VOLTAGE (VF): YELLOW 2.1V TYP @ IF-20 mA

6. INDICATED CONNECTIONS ARE FOR NIC CONFIGURATION. THE MAGNETICS ARE SYMMETRIC, AND SUPPORT AUTO-MDI/MDIX.

7. TRP CONNECTOR LOGO, PART NUMBER, DATE CODE, COUNTRY OF ORIGIN AND AGENCY APPROVAL MARKING IN APPROXIMATE LOCATION SHOWN.

8. THESE PARTS ARE RECOMMENDED FOR WAVE SOLDERING PROCESS, PREHEAT TEMPERATURE IS 120°C TO 160°C, 120 SECONDS TO 180 SECONDS,PEAK WAVE SOLDERING TEMPERATURE IS 260°C MAX,10 SECONDS MAX.

ELECTRICAL:

26P1 MAGNETIC SCHEMATIC: 3 6

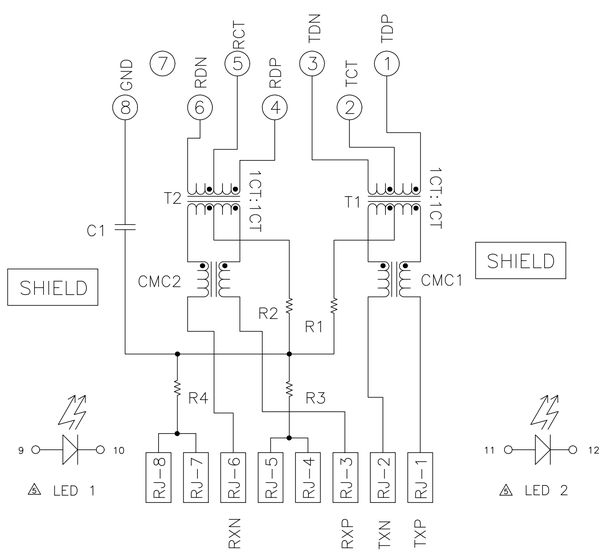

C1=1000 pF, 2kV CAPACITOR

R1-R4 =75 Ohms, 1/16 W RESISTORS

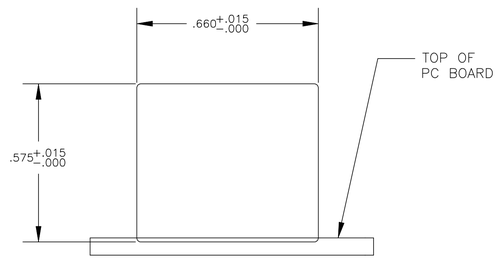

SUGGESTED PANEL CUTOUT

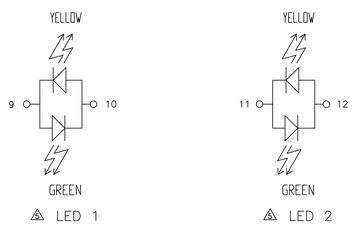

LED CONFIGURATION
FOR 6605869-6 ONLY

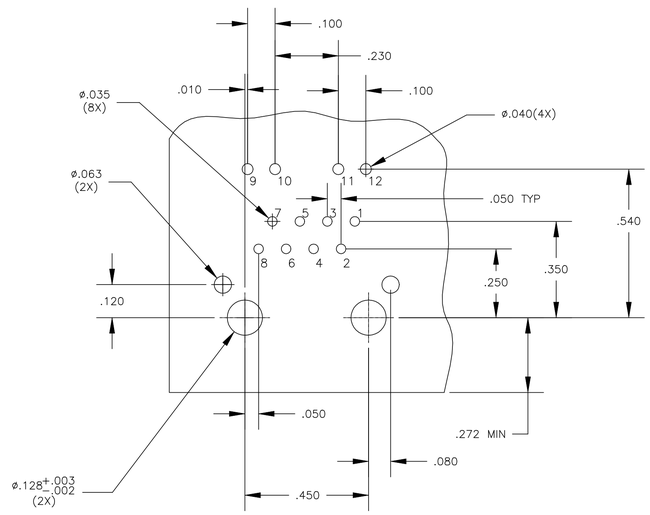

SUGGESTED PC BOARD LAYOUT
(Component Side)

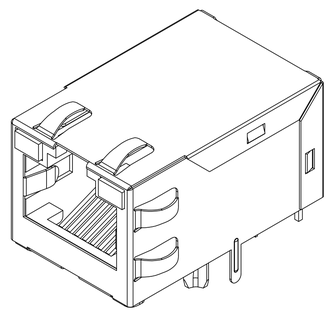

GREEN	YELLOW	5-6605869-8
GREEN	GREEN	5-6605869-7
YELLOW	GREEN	6605869-9
GREEN/YELLOW	GREEN/YELLOW	6605869-6
LED 1 5	LED 2 5	PART NUMBER

THIS DRAWING IS A CONTROLLED DOCUMENT.

DIMENSIONS: INCHES

TOLERANCES UNLESS OTHERWISE SPECIFIED:
0 PLC ± -
1 PLC ± -
2 PLC ± .01
3 PLC ± .005
4 PLC ± -
ANGLES ± -

PRODUCT SPEC 108-2100
APPLICATION SPEC -

DWN C GILLETTE 29AUG2005
CHK D FAROLE 31AUG2005
APVD S. FLICKINGER 31AUG2005
MODEL NAME MAGJACK SINGLE NON-POE

trp CONNECTOR a bel group — DONGGUAN CHINA

DESC 1X1 26P1 10/100 TAB UP W/ LED -

SIZE A1 | CAGE CODE | DRAWING NO C-6605869 | RESTRICTED TO -

CUSTOMER DRAWING | SCALE NTS | SHEET 1 OF 1 | REV J

Downloaded from Arrow.com.