MITSUMI

MITSUMI IC Products Catalog

IC Selection Guide

English Version

2. Power Supply IC

2016-2017

1 Battery IC

2 Power Supply IC

3 Sensor IC

Japanese

English

Downloaded from Arrow.com.

MITSUMI ICs implement high characteristics, high function, space saving, and low power consumption. They provide their optimum performance to meet various requirements.

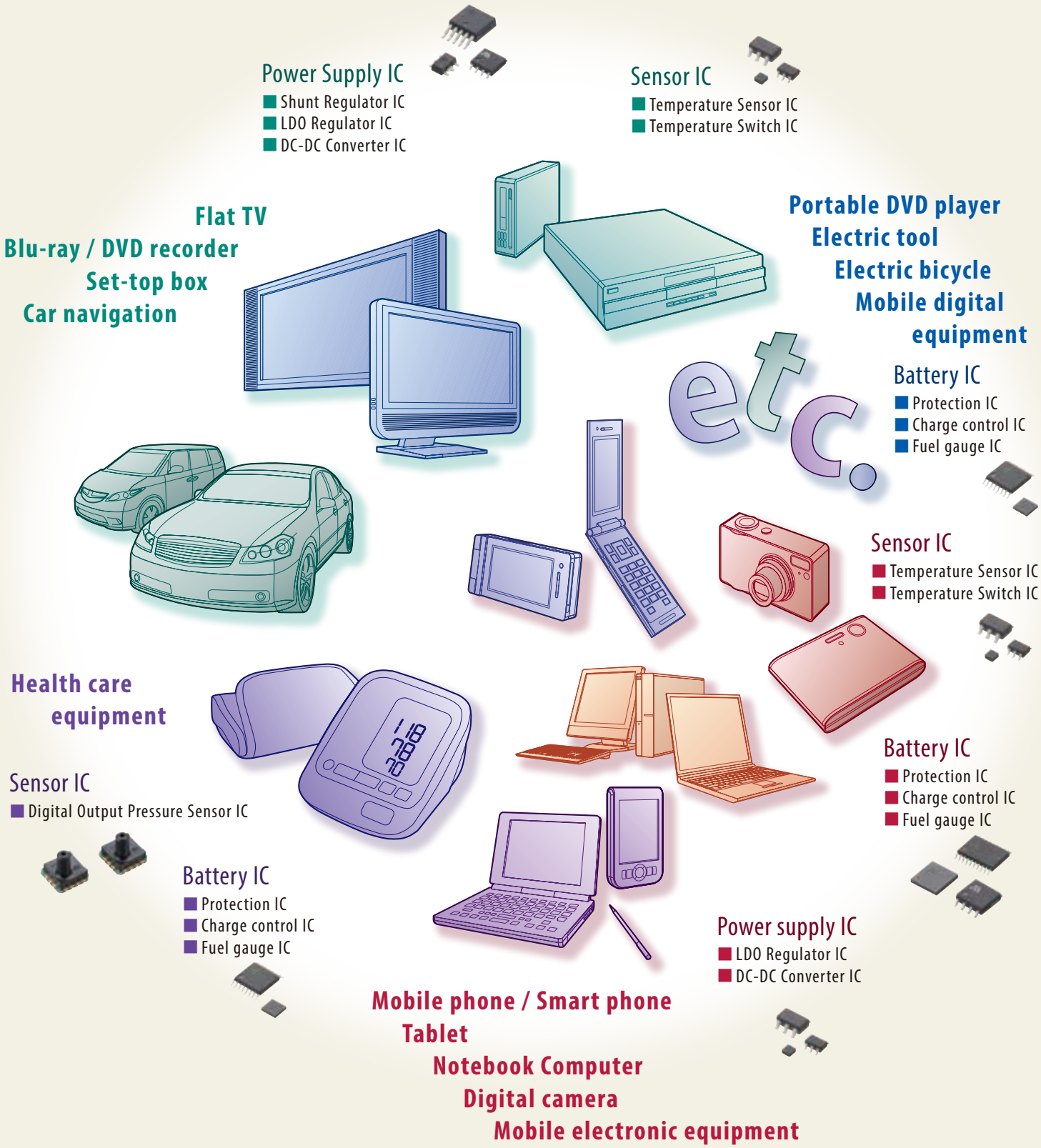

Downloaded from Arrow.com.

1

SECONDARY BATTERY IC

- Various types of battery IC for single cell to multy-cells are lined up. They are applicable to various devices from mobile gadgets to Electric bicycle.
- The battery IC is provided with a high detection accuracy and abundant functions, enabling safe battery charging and protection.
- MITSUMI's Fuel Gauge IC achieves safe and effective use of batteries by detecting the battery level.

2

POWER SUPPLY IC

- The regulator IC lineup is available with an output current of 150mA to 1.5A. Suited to various applications with a range of products offering features such as high-precision and low-consumption current.
- DC-DC converter ICs are available in step-up/step-down/ inversion type variations. Delivers high-efficiency, high-precision output over a wide input voltage range.

3

SENSOR IC

- The sensor IC is characterized by high detecting temperature accuracy and low current consumption. Digital pressure sensors are being developed by MEMS technology.
- The sensor IC is applicable to various applications through abundant rank expansion and I^2C BUS intended interface.

1. SECONDARY BATTERY ICs
- P.12~P.79 Protection for lithium-ion batterie ICs
- P.80~P.87 Lithium-ion battery fuel gauge ICs
- P.88~P.101 Lithium-ion battery charge control ICs

2. POWER SUPPLY ICs
- P.104~P.144 Regulator ICs
- P.145~P.146 Shunt regulator ICs
- P.148~P.166 DC-DC converter ICs
- P.167~P.173 AC-DC converters ICs
- P.174~P.180 LED Driver ICs
- P.183~P.204 Reset ICs (Voltage detector)

3. SENSOR ICs
- P.207~P.214 Temperature sensor ICs
- P.215~P.218 Pressure sensor ICs

Downloaded from Arrow.com.

INDEX

0 INTRODUCE

Category 1
Index 2
IC lineup 6

1 SECONDARY BATTERY ICs

SECONDARY BATTERY ICs Electrical characteristics 10

Protection for lithium-Ion batteries

▶For 1 cell▶

Small package, Built-in delay timer ..... **MM3280 Series** 12
Small package, Built-in delay timer ..... **MM3511 Series** 17
Small package, High accuracy current detection ..... **MM3638 Series** 20
NEW High accuracy current detection, With discharge control terminal ..... **MM3645 Series** 23
NEW High accuracy current detection, Multi overcurrent protection ..... **MM3721 Series** 27
NEW High accuracy current detection, High accuracy short detection ..... **MM3722 Series** 30
NEW High accuracy current detection, Without an external sense resistor ..... **MM3724 Series** 33
NEW High accuracy overcharge and overcurrent detective precision, Wide customization by OTP **ME01 Series** 36
NEW Built in FET, Low on state resistance 10.6mΩ ..... **MC3002 Series** 39
NEW Built in FET, On state resistance 13.4mΩ ..... **MC3011 Series** 42
NEW Built in FET, Super small package ..... **MD1421ExxCPAL Series** 45

▶For 2 cells▶

Built-in delay timer ..... **MM3220 Series** 48

▶For 3 cells▶

NEW For 3 cells, Delay time set by external capacitor, Temperature protection ..... **MM3783 Series** 51

▶For 3~5 cells▶

Delay time set by external capacitor ..... **MM3474 Series** 54
NEW Built-in delay timer, Cell balance, Disconnetct detection function ..... **MM3575 Series** 58
NEW Delay-time set by external capacitor, Temperature detection, Secondary protection function ..... **MM3684 Series** 63

▶Secondary protection▶

NEW For 1 cell, Low current consumption ..... **MM3734 Series** 67
For 2 to 4 cells with latch function ..... **MM3508A Series** 69
For 2 to 4 cells without latch function ..... **MM3508B Series** 70
For 2 to 3 cells with terminal CT ..... **MM3508C Series** 71
For 1 to 3 cells ..... **MM3563 Series** 73
NEW For 3 to 4 cells with RTC control function ..... **MM3625 Series** 75

▶Cell balance control▶

Voltage monitor ..... **MM3513 Series** 78

Lithium-Ion battery fuel gauge ICs

For 1 cell, High accuracy fuel gauging, Battery degradation judgment **MM8013** 80
NEW For 1 cell, High accuracy fuel gauging, Super low consumption **MM8013W** 82
For 1 cell, High accuracy fuel gauging, Battery degradation judgment, Small package **MM8033** 84
For 1 cell, High accuracy fuel gauging **MM3556** 86

Lithium-Ion battery charge control ICs

Built-in timer, Without an external sense resistor, Compliance with *JEITA* guideline **MM3458** 88
For lithium-coin battery **MM3635** 90
NEW For wearable devices, Low charge current control,
Low charge completion current control, Low BAT leak current **MM3835W** 92
For lithium-ion phosphate, Built-in timer, Without an external sense resistor,
Compliance with *JEITA* guideline **MM3658** 94
Built-in system path switch, Switching charge control, I^2C interface,
Compliance with *JEITA* guideline, I^2C interface **MM3439** 96
NEW Built-in system path switch, Switching charge control, SPI interface, Built-in RTC/ADC,
Compliance with *JEITA* guideline **MM3539** 98
Built-in system path switch, Linear charging control, battery support function,
I^2C interface, Compliance with *JEITA* guideline **MM3538** 100

Downloaded from Arrow.com.

2 POWER SUPPLY ICs

POWER SUPPLY ICs electrical characteristics 102

Voltage regulator ICs

▶Output current 150mA LDO regulators▶

Reverse current protection ..... **MM3376 Series** 104
Low current consumption ..... **MM3534 Series** 106

▶Output current 200mA LDO regulators▶

High ripple rejection, Low dropout voltage ..... **MM3404 Series** 108
Fast transient response, Rush current protection ..... **MM3411 Series** 111
Capacitor-less, Ultra-low quiescent current ..... **MM3566 Series** 114
15V withstand voltage ..... **MM1836, MM1856 Series** 116
16V withstand voltage, Reverse bias protection ..... **MM1839 Series** 118
NEW Low noise, Negative output voltage ..... **MM1898 Series** 120

▶Output current 300mA LDO regulators▶

High ripple rejection, Low dropout voltage ..... **MM3464 Series** 122
Fast transient response, Rush current protection ..... **MM3571 Series** 125
NEW With thermal shutdown circuit ..... **MM3608 Series** 127
NEW With temperature sensor ..... **MM3615 Series** 129
15V withstand voltage ..... **MM1886 Series** 131

▶Output current 500mA LDO regulator▶

Soft start function ..... **MM3526, MM3478 Series** 133

▶Output current 1000mA LDO regulators▶

High ripple rejection ..... **MM1866 Series** 135
Soft start function ..... **MM3529, MM3479 Series** 137

▶Output current 1500mA LDO regulator▶

Low output voltage, Low dropout voltage ..... **MM1870 Series** 139

▶Output current 150mA LDO regulator▶

NEW 2-channel output, Small package ..... **MM3548 Series** 141

▶Output current 300mA LDO regulator▶

NEW 2-channel output, Small package ..... **MM3549 Series** 143

Shunt regulators

2.495V reference voltage, Precision adjustable shunt regulator ..... **MM1431 Series** 145
1.240V/1.250/1.270V reference voltage, Precision adjustable shunt regulator ..... **MM1530 Series** 146

POWER SUPPLY ICs electrical characteristics 148

DC-DC converters

Boost, Built-in power FET, PWM/PFM **MM3333** 150
Boost, Built-in power FET, PWM/PFM **MM3355** 152
NEW Buck, Low LQ and high efficiency, 0.6A output **MM3472** 154
Buck, Built-in power FET, PWM **MM3370** 156
Buck, Built-in 2A power FET, PWM **MM3542** 158
Buck, Built-in 3A power FET, PWM **MM3543** 158
NEW Buck, Output voltage compensation **MM3630BV/BR** 160
Dual buck, Built-in 1.5A power FET, PWM **MM3558** 162
Charge pump voltage inverter **MM3631** 165

AC-DC converters

NEW Primary-side QR controller **MM3661** 167
NEW Secondary-side synchronous rectifier for QR/LLC **MM3667** 169
Secondary-side synchronous rectifier for QR **MM3473** 172

LED lighting ICs

White LED driver 7 LEDs **MM3097** 174
Triac dimmer power control for LED lighting **MM3760** 176
Including PFC 1 convertor for flyback ..... **MM3460+MM1837** 178

Reset ICs electrical characteristics 182

Reset ICs (Voltage detector)

No delay function, Active-low, CMOS output ..... **PST81xx Series** 183
No delay function, Active-low, Open drain output ..... **PST82xx Series** 183
NEW No delay function, Active-low, Open drain output ..... **PST86xx Series** 186
Separated sense line, Active-low, CMOS/ open drain output **PST851A, PST852A** 188

Downloaded from Arrow.com.

INDEX

Delay function included (external capacitor), Active-low CMOS output ..... **PST83xx Series** 191
Delay function included (external capacitor), Active-low open drain output ..... **PST84xx Series** 191
NEW Delay function included (external capacitor), Active-low CMOS/ open drain output ..... **PST893A/PST894A Series** 194
NEW Delay function included (external capacitor), Active-low CMOS/ open drain output
High accuracy delay time ..... **PST893B/PST894B Series** 194
Built-in delay function, Active-low, CMOS output ..... **PST87xx Series** 197
Built-in delay function, Active-low, Open drain output ..... **PST88xx Series** 197
Built-in delay function, Active-low, Open drain output **PST803xx, PST805xx** 200
Built-in delay function, Active-high, Open drain output **PST804xx, PST806xx** 200
Built-in delay function, Active-low, CMOS output **PST807xx, PST809xx** 200
Built-in delay function, Active-high, CMOS output **PST808xx, PST810xx** 200

3 SENSOR ICs

SENSOR ICs electrical characteristics 206

Temperature sensor ICs

Temperature switch IC with hysteresis (active-high) ..... **MM3488 Series** 207
NEW Temperature switch IC with hysteresis (ultra low consumption) ..... **MM3688 Series** 209
Analog output temperature sensor ..... **MM3154 Series** 211
Temperature sensor for I^2C BUS (address set pin 2) ..... **MM3285 Series** 213

Pressure sensor

Pressure sensor of digital output **MMR901XA** 215

Absolute Pressure sensor Module

NEW Absolute Pressure Sensor Module **MMR931XA** 217

4 DISCONTINUATION INFORMATION

Products to be discontinued 220
Phased out products 222

5 PACKAGE

Package line-up 224
Package 226
Pb-free recommended profile 266
Permissible counts of the solder methods for each packages 267

Downloaded from Arrow.com.

Downloaded from Arrow.com.

IC LINEUP

1 SECONDARY BATTERY ICs

Protection for lithium-Ion batteries

				SON-6C	SOT-25A	SOT-26A	SOT-26B	TSOP-8A	TSOP-16B	TSOP-20D	VSOP-24A	PLP-10A	SSON-6A	SSON-6E	SSON-6J	WLCSP-6C	PLP-4-1732
For 1 cell	Small package		MM3280	●		●	●							●	●		
			MM3511	●									●		●		
		High accuracy current detection	MM3638	●											●		
		Temperature detection	MM3645					●									
		Multi overcurrent protection	MM3721	●											●		
		High accuracy short detection	MM3722	●											●		
		Without an external sense resister	MM3724	●											●		
		High accuracy overcharge detection	ME01													●	
	Built-in FET	Low on state resistance 10.6mΩ	MC3002														●
		On state resistance 13.4mΩ	MC3011														●
		Super small package	MD1421ExxCPAL														
For 2 cells		Built-in delay timer	MM3220			●											
For 3 cells		Delay time set by external capacitor	MM3783						●								
For 3 to 5cells		Delay time set by external capacitor	MM3474							●							
		Built-in delay timer	MM3575								●						
		Delay time set by external capacitor	MM3684								●						
For secondary protection		For 1 cell	MM3734	●													
		For 2-4 cells built in latch function	MM3508A			●							●				
		For 2-4 cells without latch function	MM3508B			●							●				
		For 2-3 cells with terminal CT	MM3508C			●							●				
		For 1-3 cells	MM3563			●							●				
		For 3-4 cells with RTC control function	MM3625									●					
For cell-balance control			MM3513		●												

Fuel gauge IC for li-ion battery

			PLP-8F	PLP-10D	PLP-12A	PLP-12B	WLCSP-9A
For 1 cell	Battery degradation judgment	MM8013			●		
	Super low consumption	MM8013W				●	
	Small package	MM8033		●			●
		MM3556	●				

Lithium-Ion battery charge control ICs

				SQFN-32A	SSON-10A	WLCSP-25A	WLCSP-48B
For 1 cell	Single function	Linear charger	MM3458		●		
			MM3635		●		
			MM3835W		●		
			MM3658		●		
	System path SW	Switching charger	MM3439	●			
			MM3539				●
		Linear charger	MM3538			●	

Downloaded from Arrow.com.

2 POWER SUPPLY ICs

Voltage regulator ICs

			SOT89-5A	SC-82ABB	SOT-25A	HSOP-8A	TO-252C	TO-252-5A	PLP-4A	PLP-4B	SSON-4B	SSON-6A	SSON-6E	PLP-6C	PLP-8E
Less than 150mA LDO regulator	Reverse current protection	MM3376		●	●						●				
	Low current consumption	MM3534		●	●				●						
Less than 200mA LDO regulator	Low dropout voltage	MM3404		●	●					●					
	Rush current protection	MM3411		●	●				●						
	Capacitor-less, ultralow quiescent current	MM3566		●	●				●						
	15V withstand voltage	MM1836			●										
		MM1856		●	●										
	16V withstand voltage	MM1839			●								●		
	Low noise, Negative output voltage	MM1898			●							●			
Less than 300mA LDO regulator	Low dropout voltage	MM3464	●	●	●				●						
	Rush current protection	MM3571	●	●	●				●						
	Thermal shoutdown circuit	MM3608			●										
	Temperature sensor	MM3615			●										
	15V withstand voltage	MM1886	●		●										
Less than 500mA LDO regulator	Soft start function	MM3526	●		●							●			
		MM3478	●												
Less than 1000mA LDO regulator	High ripple rejection	MM1866				●	●								
	Soft start function	MM3529	●									●			
		MM3479	●												
Less than 1500mA LDO regulator	Low output voltage	MM1870				●		●							
Less than 150mA 2-channel LDO regulator		MM3548												●	
Less than 300mA 2-channel LDO regulator		MM3549													●

Shunt regulators

			SOT-23A	SOT-25A	SC82ABB
Adjustable shunt regulator	Vref 2.495V	MM1431	●	●	●
	Vref 1.240V / 1.250V/1.270V	MM1530	●		●

DC-DC converters

					HSOP-8A	HSOP-8C	SOP-8D	SOT-26B	SQFN-16A	SQFN-24A	SSON-6L	TSOP-20E
Boost		100mA		MM3333				●				
		200mA		MM3355			●					
Buck	Output 1ch	Diode rectification	3A	MM3370	●							
		Synchronous rectification	0.6A	MM3472							●	
			2A	MM3542			●					
			3A	MM3543		●						
			1.5A/2.5A	MM3630						●		●
	Output 2ch + LDO			MM3558					●			
Inverter	Charge pump			MM3631				●				

Downloaded from Arrow.com.

IC LINEUP

AC-DC converters

				SOP-8D	SOP-8J	SOP-10A
Primary-side	QR controller		MM3661			●
Secondary-side	Synchronous rectifier	QR/LLC	MM3667		●	
		QR	MM3473	●		

LED lighting ICs

				SOT-25A	SOP-8C	SOP-8D	SOP-10A
DC Input		White LED driver 7 LEDs	MM3097	●			
AC Input	Non-isolated	Triac dimmer power control	MM3760			●	
	Isolated	Including PFC 1 convertor for flyback	MM3460		●		
		Dual OPAMP and shunt regulator	MM1837				●

Reset ICs (Voltage detectors)

				SOT-23A	SOT-25A	SC-82ABB	SSON-4B	PLP-4A
No delay function	Active-low	CMOS output	PST81xx		●	●	●	
		Open drain output	PST82xx		●	●	●	
		Open drain output	PST86xx		●	●		
Separated sense line	Active-low	CMOS/Open drain output	PST851A, PST852A		●	●	●	
Delay function included (external capacitor)	Active-low	CMOS output	PST83xx		●	●	●	
		Open drain output	PST84xx		●	●	●	
		CMOS/Open drain output	PST893A, PST894A		●	●		●
			PST893B, PST894B		●	●		
Built-in delay function	Active-low	CMOS output	PST87xx		●	●	●	
		Open drain output	PST88xx		●	●	●	
	Active-low	CMOS output	PST807, PST809	●				
		Open drain output	PST803, PST805	●				
	Active-high	CMOS output	PST808, PST810	●				
		Open drain output	PST804, PST806	●				

Downloaded from Arrow.com.

3 SENSOR ICs

Temperature sensor ICs

				SC-82ABB	SOT-25A	SOT-26A	PLP-4A	SSON-4B
Detection output type (Temperature switch IC)		Active-high	MM3488					●
	Low current consumption	Active-high	MM3688				●	
Sensor type	Analog output		MM3154	●				●
	I^2C bus digital output		MM3285		●	●		

Pressure sensor

Pressure sensor of digital output	MMR901XA	*Original package

Absolute Pressure sensor

Absolute Pressure Sensor Module	MMR931XA	*Original package

Downloaded from Arrow.com.

2 POWER SUPPLY ICs

Electrical characteristics (Unless otherwise specified, Ta=+25°C)

Voltage regulator ICs

Product Series	Product name	Features	Maximum operational input voltage	Output voltage	Accuracy	Current consumption	Standby current consumption	Dropout voltage	Output capacitor	Packages
~150mA output current LDO regulator	MM3376	Reverse current protection	6.0V	0.8V to 5.0V	±2%	1.7μA	0.6μA (typ.)	50mV (Io=10mA, VOUT=3.0V)	Ceramic 0.1μF	SC-82ABB SOT-25A SSON-4B
	MM3534	Low current consumption	6.0V	1.2V to 5.0V	±0.8%	0.9μA	0.1μA (typ.)	240mV (Io=150mA, VOUT=3.0V)	Ceramic 0.1μF	SC-82ABB SOT-25A PLP-4A
~200mA output current LDO regulator	MM3404	High ripple rejection low dropout voltage	6.5V	0.8V to 5.0V	±1%	20μA	0.01μA (typ.)	80mV (Io=100mA, VOUT=3.0V)	Ceramic 0.1μF	SC-82ABB SOT-25A PLP-4B
	MM3411	Fast transient response / Rush current protection	6.5V	0.8V to 5.0V	±1%	25μA	0.01μA (typ.)	400mV (Io=200mA, VOUT=3.0V)	Ceramic 0.47μF	SC-82ABB SOT-25A PLP-4A
	MM3566	Cap less / Low current consumption	6.0V	1.2V to 5.0V	±1%	0.9μA	0.1μA (typ.)	350mV (Io=200mA, VOUT=3.0V)		SC-82ABB SOT-25A PLP-4A
	MM1836 MM1856	15V withstand voltage	14.0V	1.5V to 5.0V	±2%	75μA	0μA (typ.)	300mV (Io=200mA)	Ceramic 1.0μF	SC-82ABB SOT-25A
	MM1839	16V withstand voltage / Reverse bias protection	14.0V	1.5V to 5.0V	±2%	85μA	0μA (typ.)	300mV (Io=200mA)	Ceramic 1.0μF	SOT-25A SSON-6E
	MM1898 NEW	Negative output low noise (With noize reduction pin)	10.0V	−5.0V to −0.9V	±1%	160μA	3μA (typ.)	500mV (Io=200mA)	Ceramic 1.0μF	SOT-25A SSON-6A
~300mA output current LDO regulator	MM3464	High ripple rejection	6.5V	1.0V to 5.0V	±1%	20μA	0.01μA (typ.)	240mV (Io=300mA, VOUT=3.0V)	Ceramic 1.0μF	SOT89-5A SC-82ABB SOT-25A PLP-4A
	MM3571	Fast transient response / Rush current protection	6.5V	1.0V to 5.0V	±1%	25μA	0.01μA (typ.)	620mV (Io=300mA, VOUT=3.0V)	Ceramic 0.47μF	SOT89-5A SC-82ABB SOT-25A PLP-4A
	MM3608 NEW	Thermal shutdown function	6.5V	0.8V to 5.0V	±1%	90μA	0.1μA (typ.)	240mV (Io=300mA, VOUT=3.0V)	Ceramic 1.0μF	SOT-25A
	MM3615 NEW	Temperature sensor function	6.5V	0.8V to 5.0V	±1%	90μA	0.1μA (typ.)	240mV (Io=300mA, VOUT=3.0V)	Ceramic 1.0μF	SOT-25A
	MM1886	15V withstand voltage	14.0V	1.0V to 5.0V	±2%	75μA	0μA (typ.)	450mV (Io=300mA)	Ceramic 1.0μF	SOT89-5A SOT-25A
~500mA output current LDO regulator	MM3526 MM3478	Soft start function	6.0V	1.2V to 5.0V	±1%	50μA	0.1μA (typ.)	250mV (Io=500mA, Vout=3.0V)	Ceramic 0.1μF	SOT89-5A SOT-25A SSON-6A
~1000mA output current LDO regulator	MM1866	High ripple rejection	10.0V	1.5V to 5.0V	±2%	2.5mA	0μA (typ.)	200mV (Io=500mA)	Ceramic 1.0μF	HSOP-8A TO-252C
	MM3529 MM3479	Soft start function	6.0V	1.2V to 5.0V	±1%	50μA	0.1μA (typ.)	500mV (Io=1000mA, VOUT=3.0V)	Ceramic 1.0μF	SOT89-5A SSON-6A
~1500mA output current LDO regulator	MM1870	Low output voltag low dropout voltage	10.0V	0.9V to 5.0V	±2%	1mA	0μA (typ.)	260mV (Io=1500mA)	Ceramic 1.0μF	HSOP-8A TO-252-5A
~150mA output current 2ch LDO regulator	MM3548 NEW	Small package	6.0V	1.2V to 5.0V	±1%	40μA/ch	0.1μA (typ.)	210mV (Io=150mA, VOUT=3.0V)	Ceramic 1.0μF	PLP-6C
~300mA output current 2ch LDO regulator	MM3549 NEW	Small package	6.0V	1.2V to 5.0V	±1%	40μA/ch	0.1μA (typ.)	220mV (Io=300mA, VOUT=3.0V)	Ceramic 1.0μF	PLP-8E

Downloaded from Arrow.com.

2 POWER SUPPLY ICs

Electrical characteristics (Unless otherwise specified, Ta=+25°C)

Shunt regulator ICs

Product Series	Product name	Reference voltage	Accuracy	Cathode voltage max.	Cathode current max.	Minimum cathode current	Package
Adjustable shunt regulator	MM1431	2.495V	±0.4% ±0.5% ±0.8%	35V	50mA	0.3mA	SC-82ABB SOT-23A SOT-25A
Adjustable shunt regulator	MM1530	1.240V 1.250V 1.270V	±0.5% ±0.8%	12V	15mA 30mA	0.05mA 0.15mA	SC-82ABB SOT-23A

Downloaded from Arrow.com.

150mA CMOS voltage regulators with the reverse current protection

MM3376 Series

Outline

This IC is a regulator IC providing low supply current (1.7µA) and low input voltage (1.2V to 6V), developed using the CMOS process.
In addition, it is ideal to be used for a constant voltage power supply for backup as it includes a reverse current protection function to automatically prevent a current (0.1µA max.) from reversely flowing to the input terminal side if a voltage exceeding the input terminal voltage (V_{DD}) is applied to the output terminal (V_{OUT}) by monitoring the voltages of the output terminal (V_{OUT}) and input terminal (V_{DD}).

Applications

(1) Smart phones
(2) Tablet PCs
(3) Mobile phones
(4) Portable music Players
(5) Digital still cameras
(6) Portable games

Features (Unless otherwise specified, Ta=+25°C)

(1) Input voltage range .....1.2V to 6V
(2) Output voltage range .....0.8V to 5.0V
(3) Output voltage accuracy.....V_{OUT}±2%
(4) Maximum output current.....150mA
(5) Current consumption .....1.7µA typ.
(No-Load Input Current)
0.6µA typ. (OFF)
(6) Reverse current.....0.1µA max.
(7) Output capacitor 0.1µF
(8) Dropout voltage.....30mV typ. / 50mV max.
(Io=10mA, 3.3V≦V_{OUT}≦5.0V)
(9) Output short-circuit current...60mA typ.
(10) Line regulation.....0.05% / V typ. (Io=1mA)
(11) Load regulation .....30mV typ. / 90mV max.
(Io=1 to 150mA)

Pin assignment

SOT-25A

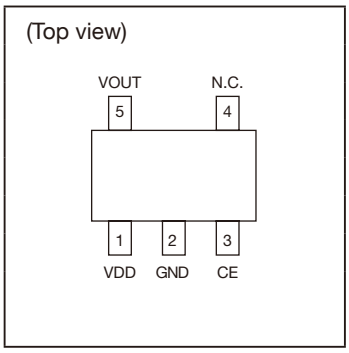

SC-82ABB

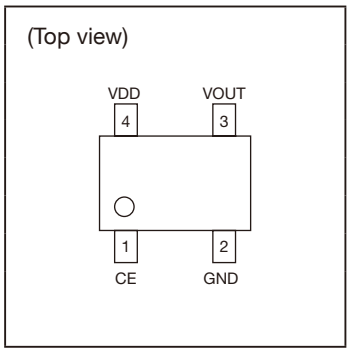

SSON-4B

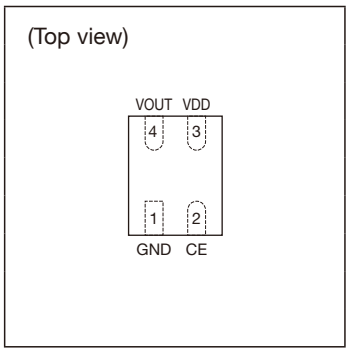

Model name structure

M M 3 3 7 6 A □ □ □ R E

Embossed taping	E
Housing	R
Package code	
SC-82ABB	U
SOT-25A	N
SSON-4B	R
Output voltage	
e.g.) 3.3V	33

Downloaded from Arrow.com.

Selection guide

Output Voltage	Accuracy	Parts No.			Dropout Voltage (Typ.) Io=10mA	Output Current	No-Load Input Current (Typ.)
		SOT-25A Package (3,000pcs/Reel)	SC-82ABB Package (3,000pcs/Reel)	SSON-4B Package (3,000pcs/Reel)			
0.8V	±30mV	MM3376A08NRE	MM3376A08URE	MM3376A08RRE	*	150mA	1.7μA
0.9V	±30mV	MM3376A09NRE	MM3376A09URE	MM3376A09RRE	*	150mA	1.7μA
1.0V	±30mV	MM3376A10NRE	MM3376A10URE	MM3376A10RRE	*	150mA	1.7μA
1.1V	±30mV	MM3376A11NRE	MM3376A11URE	MM3376A11RRE	*	150mA	1.7μA
1.2V	±30mV	MM3376A12NRE	MM3376A12URE	MM3376A12RRE	*	150mA	1.7μA
1.3V	±30mV	MM3376A13NRE	MM3376A13URE	MM3376A13RRE	*	150mA	1.7μA
1.4V	±30mV	MM3376A14NRE	MM3376A14URE	MM3376A14RRE	*	150mA	1.7μA
1.5V	±2%	MM3376A15NRE	MM3376A15URE	MM3376A15RRE	0.12V	150mA	1.7μA
1.6V	±2%	MM3376A16NRE	MM3376A16URE	MM3376A16RRE	0.12V	150mA	1.7μA
1.7V	±2%	MM3376A17NRE	MM3376A17URE	MM3376A17RRE	0.12V	150mA	1.7μA
1.8V	±2%	MM3376A18NRE	MM3376A18URE	MM3376A18RRE	0.12V	150mA	1.7μA
1.9V	±2%	MM3376A19NRE	MM3376A19URE	MM3376A19RRE	0.12V	150mA	1.7μA
2.0V	±2%	MM3376A20NRE	MM3376A20URE	MM3376A20RRE	0.08V	150mA	1.7μA
2.1V	±2%	MM3376A21NRE	MM3376A21URE	MM3376A21RRE	0.08V	150mA	1.7μA
2.2V	±2%	MM3376A22NRE	MM3376A22URE	MM3376A22RRE	0.08V	150mA	1.7μA
2.3V	±2%	MM3376A23NRE	MM3376A23URE	MM3376A23RRE	0.08V	150mA	1.7μA
2.4V	±2%	MM3376A24NRE	MM3376A24URE	MM3376A24RRE	0.08V	150mA	1.7μA
2.5V	±2%	MM3376A25NRE	MM3376A25URE	MM3376A25RRE	0.06V	150mA	1.7μA
2.6V	±2%	MM3376A26NRE	MM3376A26URE	MM3376A26RRE	0.06V	150mA	1.7μA
2.7V	±2%	MM3376A27NRE	MM3376A27URE	MM3376A27RRE	0.06V	150mA	1.7μA
2.8V	±2%	MM3376A28NRE	MM3376A28URE	MM3376A28RRE	0.06V	150mA	1.7μA
2.9V	±2%	MM3376A29NRE	MM3376A29URE	MM3376A29RRE	0.06V	150mA	1.7μA
3.0V	±2%	MM3376A30NRE	MM3376A30URE	MM3376A30RRE	0.05V	150mA	1.7μA
3.1V	±2%	MM3376A31NRE	MM3376A31URE	MM3376A31RRE	0.05V	150mA	1.7μA
3.2V	±2%	MM3376A32NRE	MM3376A32URE	MM3376A32RRE	0.05V	150mA	1.7μA
3.3V	±2%	MM3376A33NRE	MM3376A33URE	MM3376A33RRE	0.03V	150mA	1.7μA
3.4V	±2%	MM3376A34NRE	MM3376A34URE	MM3376A34RRE	0.03V	150mA	1.7μA
3.5V	±2%	MM3376A35NRE	MM3376A35URE	MM3376A35RRE	0.03V	150mA	1.7μA
3.6V	±2%	MM3376A36NRE	MM3376A36URE	MM3376A36RRE	0.03V	150mA	1.7μA
3.7V	±2%	MM3376A37NRE	MM3376A37URE	MM3376A37RRE	0.03V	150mA	1.7μA
3.8V	±2%	MM3376A38NRE	MM3376A38URE	MM3376A38RRE	0.03V	150mA	1.7μA
3.9V	±2%	MM3376A39NRE	MM3376A39URE	MM3376A39RRE	0.03V	150mA	1.7μA
4.0V	±2%	MM3376A40NRE	MM3376A40URE	MM3376A40RRE	0.03V	150mA	1.7μA
4.1V	±2%	MM3376A41NRE	MM3376A41URE	MM3376A41RRE	0.03V	150mA	1.7μA
4.2V	±2%	MM3376A42NRE	MM3376A42URE	MM3376A42RRE	0.03V	150mA	1.7μA
4.3V	±2%	MM3376A43NRE	MM3376A43URE	MM3376A43RRE	0.03V	150mA	1.7μA
4.4V	±2%	MM3376A44NRE	MM3376A44URE	MM3376A44RRE	0.03V	150mA	1.7μA
4.5V	±2%	MM3376A45NRE	MM3376A45URE	MM3376A45RRE	0.03V	150mA	1.7μA
4.6V	±2%	MM3376A46NRE	MM3376A46URE	MM3376A46RRE	0.03V	150mA	1.7μA
4.7V	±2%	MM3376A47NRE	MM3376A47URE	MM3376A47RRE	0.03V	150mA	1.7μA
4.8V	±2%	MM3376A48NRE	MM3376A48URE	MM3376A48RRE	0.03V	150mA	1.7μA
4.9V	±2%	MM3376A49NRE	MM3376A49URE	MM3376A49RRE	0.03V	150mA	1.7μA
5.0V	±2%	MM3376A50NRE	MM3376A50URE	MM3376A50RRE	0.03V	150mA	1.7μA

* The parameter is not guaranteed in the model less than V_{OUT}=1.5V .

Downloaded from Arrow.com.

Low current consumption 150mA regulator IC

MM3534 Series

Outline

This IC is a low current consumption 150mA LDO.
The IC can be better low current consumption and load transient by bias boost circuit. Therefore the IC is ideal for mobile applications.

Applications

(1) Smart phones
(2) Tablet PCs
(3) Mobile phones
(4) Portable music Players
(5) Digital still cameras
(6) Portable games

Features (Unless otherwise specified, Ta=+25°C)

(1) Input voltage range .....1.7V to 6.0V
(2) Output voltage range.....1.2V to 5.0V
(3) Output voltage accuracy .....VOUT±0.8% (VOUT>2V)
(4) Maximum output current.....150mA
(5) Current consumption.....0.9μA typ. (No-load)
(VOUT=1.2V to 3.3V)
0.1μA typ. (OFF)
(6) Output capacitor 0.1μF
(7) Dropout voltage.....0.24V typ.
(Io=150mA, VOUT=3V)
(8) Output short-circuit current....100mA typ.
(9) Line regulation.....0.1% / V max.
(10)Load regulation.....10mV typ. (Io=1mA to 150mA)
(11)Ripple rejection.....50dB typ. (f=1kHz)

Pin assignment

SOT-25A

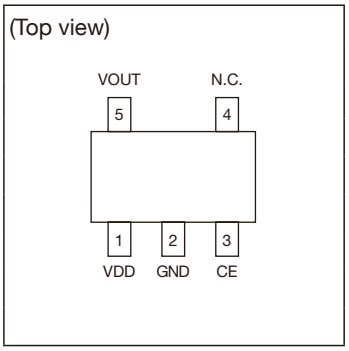

SC-82ABB

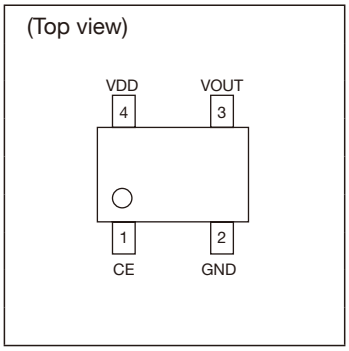

PLP-4A

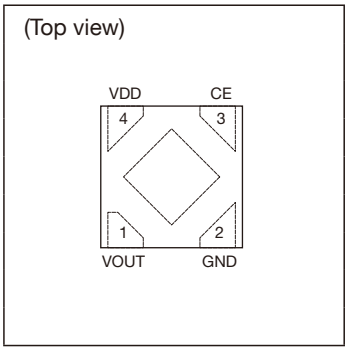

Model name structure

M M 3 3 4 3 A □ □ □ R E

Embossed taping	E
Housing	R
Package code	
PLP-4A	R
SC-82ABB	U
SOT-25A	N
Output voltage	
e.g.) 3.3V	33

Downloaded from Arrow.com.

Selection guide

Output Voltage	Accuracy	Parts No.			Dropout Voltage (Typ.) Io=150mA	Output Current	No-Load Input Current (Typ.)
		SOT-25A Package (3,000pcs/Reel)	SC-82ABB Package (3,000pcs/Reel)	PLP-4A Package (5,000pcs/Reel)			
1.2V	±16mV	MM3534A12NRE	MM3534A12URE	MM3534A12RRE	0.76V	150mA	0.9μA
1.3V	±16mV	MM3534A13NRE	MM3534A13URE	MM3534A13RRE	0.76V	150mA	0.9μA
1.4V	±16mV	MM3534A14NRE	MM3534A14URE	MM3534A14RRE	0.76V	150mA	0.9μA
1.5V	±16mV	MM3534A15NRE	MM3534A15URE	MM3534A15RRE	0.53V	150mA	0.9μA
1.6V	±16mV	MM3534A16NRE	MM3534A16URE	MM3534A16RRE	0.53V	150mA	0.9μA
1.7V	±16mV	MM3534A17NRE	MM3534A17URE	MM3534A17RRE	0.44V	150mA	0.9μA
1.8V	±16mV	MM3534A18NRE	MM3534A18URE	MM3534A18RRE	0.44V	150mA	0.9μA
1.9V	±16mV	MM3534A19NRE	MM3534A19URE	MM3534A19RRE	0.44V	150mA	0.9μA
2.0V	±16mV	MM3534A20NRE	MM3534A20URE	MM3534A20RRE	0.34V	150mA	0.9μA
2.1V	±0.8%	MM3534A21NRE	MM3534A21URE	MM3534A21RRE	0.34V	150mA	0.9μA
2.2V	±0.8%	MM3534A22NRE	MM3534A22URE	MM3534A22RRE	0.34V	150mA	0.9μA
2.3V	±0.8%	MM3534A23NRE	MM3534A23URE	MM3534A23RRE	0.34V	150mA	0.9μA
2.4V	±0.8%	MM3534A24NRE	MM3534A24URE	MM3534A24RRE	0.34V	150mA	0.9μA
2.5V	±0.8%	MM3534A25NRE	MM3534A25URE	MM3534A25RRE	0.28V	150mA	0.9μA
2.6V	±0.8%	MM3534A26NRE	MM3534A26URE	MM3534A26RRE	0.28V	150mA	0.9μA
2.7V	±0.8%	MM3534A27NRE	MM3534A27URE	MM3534A27RRE	0.28V	150mA	0.9μA
2.8V	±0.8%	MM3534A28NRE	MM3534A28URE	MM3534A28RRE	0.24V	150mA	0.9μA
2.9V	±0.8%	MM3534A29NRE	MM3534A29URE	MM3534A29RRE	0.24V	150mA	0.9μA
3.0V	±0.8%	MM3534A30NRE	MM3534A30URE	MM3534A30RRE	0.24V	150mA	0.9μA
3.1V	±0.8%	MM3534A31NRE	MM3534A31URE	MM3534A31RRE	0.24V	150mA	0.9μA
3.2V	±0.8%	MM3534A32NRE	MM3534A32URE	MM3534A32RRE	0.24V	150mA	0.9μA
3.3V	±0.8%	MM3534A33NRE	MM3534A33URE	MM3534A33RRE	0.24V	150mA	0.9μA
3.4V	±0.8%	MM3534A34NRE	MM3534A34URE	MM3534A34RRE	0.24V	150mA	1.2μA
3.5V	±0.8%	MM3534A35NRE	MM3534A35URE	MM3534A35RRE	0.24V	150mA	1.2μA
3.6V	±0.8%	MM3534A36NRE	MM3534A36URE	MM3534A36RRE	0.24V	150mA	1.2μA
3.7V	±0.8%	MM3534A37NRE	MM3534A37URE	MM3534A37RRE	0.24V	150mA	1.2μA
3.8V	±0.8%	MM3534A38NRE	MM3534A38URE	MM3534A38RRE	0.24V	150mA	1.2μA
3.9V	±0.8%	MM3534A39NRE	MM3534A39URE	MM3534A39RRE	0.24V	150mA	1.2μA
4.0V	±0.8%	MM3534A40NRE	MM3534A40URE	MM3534A40RRE	0.24V	150mA	1.2μA
4.1V	±0.8%	MM3534A41NRE	MM3534A41URE	MM3534A41RRE	0.24V	150mA	1.2μA
4.2V	±0.8%	MM3534A42NRE	MM3534A42URE	MM3534A42RRE	0.24V	150mA	1.2μA
4.3V	±0.8%	MM3534A43NRE	MM3534A43URE	MM3534A43RRE	0.24V	150mA	1.2μA
4.4V	±0.8%	MM3534A44NRE	MM3534A44URE	MM3534A44RRE	0.24V	150mA	1.2μA
4.5V	±0.8%	MM3534A45NRE	MM3534A45URE	MM3534A45RRE	0.24V	150mA	1.2μA
4.6V	±0.8%	MM3534A46NRE	MM3534A46URE	MM3534A46RRE	0.24V	150mA	1.2μA
4.7V	±0.8%	MM3534A47NRE	MM3534A47URE	MM3534A47RRE	0.24V	150mA	1.2μA
4.8V	±0.8%	MM3534A48NRE	MM3534A48URE	MM3534A48RRE	0.24V	150mA	1.2μA
4.9V	±0.8%	MM3534A49NRE	MM3534A49URE	MM3534A49RRE	0.24V	150mA	1.2μA
5.0V	±0.8%	MM3534A50NRE	MM3534A50URE	MM3534A50RRE	0.24V	150mA	1.2μA

Downloaded from Arrow.com.

High speed response 200mA regulator IC

MM3404 Series

Outline

This IC is a high speed response 200mA regulator IC with low current consumption and high ripple rejection.
No load input current is 20µA typ. And ripple rejection is 75dB typ.
Dropout voltage is low at 80mV typ., therefore the IC applies to most mobile equipment.

Applications

(1) Smart phones
(2) Tablet PCs
(3) Mobile phones
(4) Portablae music Players
(5) Digital still cameras
(6) Portable games

Features (Unless otherwise specified, Ta=+25°C)

(1) Input voltage range .....1.6V to 6.5V
(2) Output voltage range .....0.8V to 5.0V
(3) Output voltage accuracy.....VOUT±1%
(4) Maximum output current.....200mA
(5) Current consumption .....20µA typ.
(No-Load Input Current)
0.01µA typ. (OFF)
(6) Output capacitor 1.0µF
(7) Dropout voltage.....80mV
(Io=100mA)
(8) Output short-circuit current...30mA typ.
(9) Line regulation.....0.01% / V typ.
(10) Load regulation .....40mV max.
(Io=1mA to 100mA)
(11) Ripple rejection .....75dB typ. (f=1kHz)

Pin assignment

■ SOT-25A

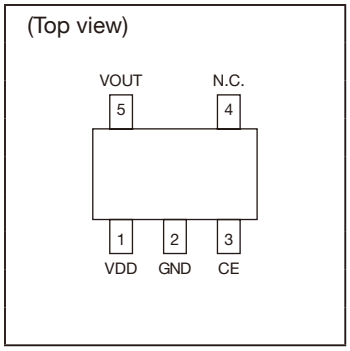

■ SC-82ABB

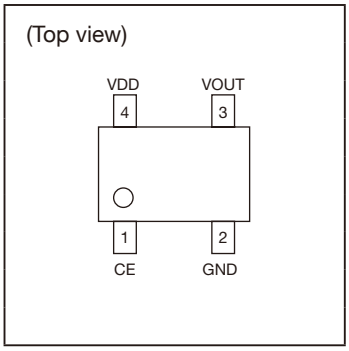

■ PLP-4B

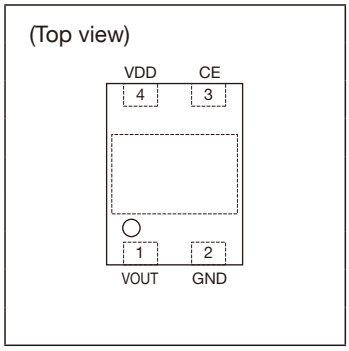

Model name structure

M M 3 4 0 4 □ □ □ □ R E

Embossed taping	E
Housing	R
Package code	
PLP-4A	R
SC-82ABB	U
SOT-25A	N
Output voltage (2)	
0.8V to 5.0V (0.05V step)	08 to 50
Output voltage (1)	
0.00V	A
0.05V	Z
e.g.) 3.30V	A33
e.g.) 3.35V	Z33

Downloaded from Arrow.com.

Selection guide

Output Voltage	Accuracy	Parts No.			Dropout Voltage (Typ.) Io=100mA	Output Current	No-Load Input Current (Typ.)
		SOT-25A Package (3,000pcs/Reel)	SC-82ABB Package (3,000pcs/Reel)	PLP-4B Package (5,000pcs/Reel)			
0.80V	±20mV	MM3404A08NRE	MM3404A08URE	MM3404A08RRE	500mV	200mA	20μA
0.85V	±20mV	MM3404Z08NRE	MM3404Z08URE	MM3404Z08RRE	500mV	200mA	20μA
0.90V	±20mV	MM3404A09NRE	MM3404A09URE	MM3404A09RRE	410mV	200mA	20μA
0.95V	±20mV	MM3404Z09NRE	MM3404Z09URE	MM3404Z09RRE	410mV	200mA	20μA
1.00V	±20mV	MM3404A10NRE	MM3404A10URE	MM3404A10RRE	330mV	200mA	20μA
1.05V	±20mV	MM3404Z10NRE	MM3404Z10URE	MM3404Z10RRE	330mV	200mA	20μA
1.10V	±20mV	MM3404A11NRE	MM3404A11URE	MM3404A11RRE	330mV	200mA	20μA
1.15V	±20mV	MM3404Z11NRE	MM3404Z11URE	MM3404Z11RRE	330mV	200mA	20μA
1.20V	±20mV	MM3404A12NRE	MM3404A12URE	MM3404A12RRE	230mV	200mA	20μA
1.25V	±20mV	MM3404Z12NRE	MM3404Z12URE	MM3404Z12RRE	230mV	200mA	20μA
1.30V	±20mV	MM3404A13NRE	MM3404A13URE	MM3404A13RRE	230mV	200mA	20μA
1.35V	±20mV	MM3404Z13NRE	MM3404Z13URE	MM3404Z13RRE	230mV	200mA	20μA
1.40V	±20mV	MM3404A14NRE	MM3404A14URE	MM3404A14RRE	230mV	200mA	20μA
1.45V	±20mV	MM3404Z14NRE	MM3404Z14URE	MM3404Z14RRE	230mV	200mA	20μA
1.50V	±20mV	MM3404A15NRE	MM3404A15URE	MM3404A15RRE	180mV	200mA	20μA
1.55V	±20mV	MM3404Z15NRE	MM3404Z15URE	MM3404Z15RRE	180mV	200mA	20μA
1.60V	±20mV	MM3404A16NRE	MM3404A16URE	MM3404A16RRE	180mV	200mA	20μA
1.65V	±20mV	MM3404Z16NRE	MM3404Z16URE	MM3404Z16RRE	180mV	200mA	20μA
1.70V	±20mV	MM3404A17NRE	MM3404A17URE	MM3404A17RRE	180mV	200mA	20μA
1.75V	±20mV	MM3404Z17NRE	MM3404Z17URE	MM3404Z17RRE	180mV	200mA	20μA
1.80V	±20mV	MM3404A18NRE	MM3404A18URE	MM3404A18RRE	180mV	200mA	20μA
1.85V	±20mV	MM3404Z18NRE	MM3404Z18URE	MM3404Z18RRE	180mV	200mA	20μA
1.90V	±20mV	MM3404A19NRE	MM3404A19URE	MM3404A19RRE	180mV	200mA	20μA
1.95V	±20mV	MM3404Z19NRE	MM3404Z19URE	MM3404Z19RRE	180mV	200mA	20μA
2.00V	±1%	MM3404A20NRE	MM3404A20URE	MM3404A20RRE	180mV	200mA	20μA
2.05V	±1%	MM3404Z20NRE	MM3404Z20URE	MM3404Z20RRE	180mV	200mA	20μA
2.10V	±1%	MM3404A21NRE	MM3404A21URE	MM3404A21RRE	180mV	200mA	20μA
2.15V	±1%	MM3404Z21NRE	MM3404Z21URE	MM3404Z21RRE	180mV	200mA	20μA
2.20V	±1%	MM3404A22NRE	MM3404A22URE	MM3404A22RRE	180mV	200mA	20μA
2.25V	±1%	MM3404Z22NRE	MM3404Z22URE	MM3404Z22RRE	180mV	200mA	20μA
2.30V	±1%	MM3404A23NRE	MM3404A23URE	MM3404A23RRE	180mV	200mA	20μA
2.35V	±1%	MM3404Z23NRE	MM3404Z23URE	MM3404Z23RRE	180mV	200mA	20μA
2.40V	±1%	MM3404A24NRE	MM3404A24URE	MM3404A24RRE	180mV	200mA	20μA
2.45V	±1%	MM3404Z24NRE	MM3404Z24URE	MM3404Z24RRE	180mV	200mA	20μA
2.50V	±1%	MM3404A25NRE	MM3404A25URE	MM3404A25RRE	180mV	200mA	20μA
2.55V	±1%	MM3404Z25NRE	MM3404Z25URE	MM3404Z25RRE	180mV	200mA	20μA
2.60V	±1%	MM3404A26NRE	MM3404A26URE	MM3404A26RRE	180mV	200mA	20μA
2.65V	±1%	MM3404Z26NRE	MM3404Z26URE	MM3404Z26RRE	180mV	200mA	20μA
2.70V	±1%	MM3404A27NRE	MM3404A27URE	MM3404A27RRE	180mV	200mA	20μA
2.75V	±1%	MM3404Z27NRE	MM3404Z27URE	MM3404Z27RRE	180mV	200mA	20μA
2.80V	±1%	MM3404A28NRE	MM3404A28URE	MM3404A28RRE	180mV	200mA	20μA
2.85V	±1%	MM3404Z28NRE	MM3404Z28URE	MM3404Z28RRE	180mV	200mA	20μA
2.90V	±1%	MM3404A29NRE	MM3404A29URE	MM3404A29RRE	180mV	200mA	20μA
2.95V	±1%	MM3404Z29NRE	MM3404Z29URE	MM3404Z29RRE	180mV	200mA	20μA
3.00V	±1%	MM3404A30NRE	MM3404A30URE	MM3404A30RRE	80mV	200mA	20μA
3.05V	±1%	MM3404Z30NRE	MM3404Z30URE	MM3404Z30RRE	80mV	200mA	20μA
3.10V	±1%	MM3404A31NRE	MM3404A31URE	MM3404A31RRE	80mV	200mA	20μA
3.15V	±1%	MM3404Z31NRE	MM3404Z31URE	MM3404Z31RRE	80mV	200mA	20μA
3.20V	±1%	MM3404A32NRE	MM3404A32URE	MM3404A32RRE	80mV	200mA	20μA
3.25V	±1%	MM3404Z32NRE	MM3404Z32URE	MM3404Z32RRE	80mV	200mA	20μA
3.30V	±1%	MM3404A33NRE	MM3404A33URE	MM3404A33RRE	80mV	200mA	20μA
3.35V	±1%	MM3404Z33NRE	MM3404Z33URE	MM3404Z33RRE	80mV	200mA	20μA
3.40V	±1%	MM3404A34NRE	MM3404A34URE	MM3404A34RRE	80mV	200mA	20μA
3.45V	±1%	MM3404Z34NRE	MM3404Z34URE	MM3404Z34RRE	80mV	200mA	20μA

Downloaded from Arrow.com.

Output Voltage	Accuracy	Parts No.			Dropout Voltage (Typ.) Io=100mA	Output Current	No-Load Input Current (Typ.)
		SOT-25A Package (3,000pcs/Reel)	SC-82ABB Package (3,000pcs/Reel)	PLP-4B Package (5,000pcs/Reel)			
3.50V	±1%	MM3404A35NRE	MM3404A35URE	MM3404A35RRE	80mV	200mA	20μA
3.55V	±1%	MM3404Z35NRE	MM3404Z35URE	MM3404Z35RRE	80mV	200mA	20μA
3.60V	±1%	MM3404A36NRE	MM3404A36URE	MM3404A36RRE	80mV	200mA	20μA
3.65V	±1%	MM3404Z36NRE	MM3404Z36URE	MM3404Z36RRE	80mV	200mA	20μA
3.70V	±1%	MM3404A37NRE	MM3404A37URE	MM3404A37RRE	80mV	200mA	20μA
3.75V	±1%	MM3404Z37NRE	MM3404Z37URE	MM3404Z37RRE	80mV	200mA	20μA
3.80V	±1%	MM3404A38NRE	MM3404A38URE	MM3404A38RRE	80mV	200mA	20μA
3.85V	±1%	MM3404Z38NRE	MM3404Z38URE	MM3404Z38RRE	80mV	200mA	20μA
3.90V	±1%	MM3404A39NRE	MM3404A39URE	MM3404A39RRE	80mV	200mA	20μA
3.95V	±1%	MM3404Z39NRE	MM3404Z39URE	MM3404Z39RRE	80mV	200mA	20μA
4.00V	±1%	MM3404A40NRE	MM3404A40URE	MM3404A40RRE	80mV	200mA	20μA
4.05V	±1%	MM3404Z40NRE	MM3404Z40URE	MM3404Z40RRE	80mV	200mA	20μA
4.10V	±1%	MM3404A41NRE	MM3404A41URE	MM3404A41RRE	80mV	200mA	20μA
4.15V	±1%	MM3404Z41NRE	MM3404Z41URE	MM3404Z41RRE	80mV	200mA	20μA
4.20V	±1%	MM3404A42NRE	MM3404A42URE	MM3404A42RRE	80mV	200mA	20μA
4.25V	±1%	MM3404Z42NRE	MM3404Z42URE	MM3404Z42RRE	80mV	200mA	20μA
4.30V	±1%	MM3404A43NRE	MM3404A43URE	MM3404A43RRE	80mV	200mA	20μA
4.35V	±1%	MM3404Z43NRE	MM3404Z43URE	MM3404Z43RRE	80mV	200mA	20μA
4.40V	±1%	MM3404A44NRE	MM3404A44URE	MM3404A44RRE	80mV	200mA	20μA
4.45V	±1%	MM3404Z44NRE	MM3404Z44URE	MM3404Z44RRE	80mV	200mA	20μA
4.50V	±1%	MM3404A45NRE	MM3404A45URE	MM3404A45RRE	80mV	200mA	20μA
4.55V	±1%	MM3404Z45NRE	MM3404Z45URE	MM3404Z45RRE	80mV	200mA	20μA
4.60V	±1%	MM3404A46NRE	MM3404A46URE	MM3404A46RRE	80mV	200mA	20μA
4.65V	±1%	MM3404Z46NRE	MM3404Z46URE	MM3404Z46RRE	80mV	200mA	20μA
4.70V	±1%	MM3404A47NRE	MM3404A47URE	MM3404A47RRE	80mV	200mA	20μA
4.75V	±1%	MM3404Z47NRE	MM3404Z47URE	MM3404Z47RRE	80mV	200mA	20μA
4.80V	±1%	MM3404A48NRE	MM3404A48URE	MM3404A48RRE	80mV	200mA	20μA
4.85V	±1%	MM3404Z48NRE	MM3404Z48URE	MM3404Z48RRE	80mV	200mA	20μA
4.90V	±1%	MM3404A49NRE	MM3404A49URE	MM3404A49RRE	80mV	200mA	20μA
4.95V	±1%	MM3404Z49NRE	MM3404Z49URE	MM3404Z49RRE	80mV	200mA	20μA
5.00V	±1%	MM3404A50NRE	MM3404A50URE	MM3404A50RRE	80mV	200mA	20μA

Downloaded from Arrow.com.

Rush current protection 200mA regulator IC

MM3411 Series

Outline

This is a 200mA Low dropout regulator IC with Rush current protection circuit.
No load input current is 25µA typ., and it reduce drop voltage for high speed response.
Rush current protection circuit can control rush current.
The package is small size of 1010, and it applies to mobile equipment.

Applications

(1) Smart phones
(2) Tablet PCs
(3) Mobile phones
(4) Portable music Players
(5) Digital still cameras
(6) Portable games

Features (Unless otherwise specified, Ta=+25°C)

(1) Input voltage range .....1.8V to 6.5V
(2) Output voltage range .....0.8V to 5.0V
(3) Output voltage accuracy.....VOUT±1.0%
(4) Maximum output current.....200mA
(5) Current Consumption.....25µA typ.
(No-Load Input Current)
0.01µA typ. (OFF)
(6) Output capacitor 0.47µF
(7) Dropout voltage.....0.40V typ.
(VOUT=3.0V, Io=200mA)
(8) Output short-circuit current...20mA typ.
(9) Line regulation.....0.01% / V typ.
(10) Load regulation .....20mV typ. (Io=1mA to 200mA)
(11) Ripple rejection .....70dB typ. (f=1kHz)

Pin assignment

■ SOT-25A

(Top view)

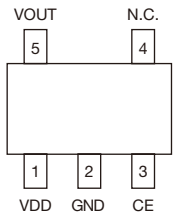

■ SC-82ABB

(Top view)

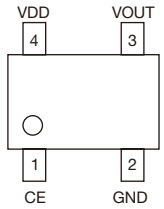

■ PLP-4A

(Top view)

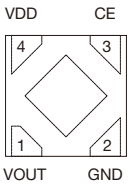

Model name structure

M M 3 4 1 1 □ □ □ □ R E

Embossed taping	E
Housing	R
Package code	
PLP-4A	R
SC-82ABB	U
SOT-25A	N
Output voltage (2)	
0.8V to 5.0V (0.05V step)	08 to 50
Output voltage (1)	
0.00V	A
0.05V	Z
e.g.) 3.30V	A33
e.g.) 3.35V	Z33

Downloaded from Arrow.com.

Selection guide

Output Voltage	Accuracy	Parts No.			Dropout Voltage (Typ.) Io=200mA	Output Current	No-Load Input Current (Typ.)
		SOT-25A Package (3,000pcs/Reel)	SC-82ABB Package (3,000pcs/Reel)	PLP-4A Package (5,000pcs/Reel)			
0.80V	±20mV	MM3411A08NRE	MM3411A08URE	MM3411A08RRE	1.00V	200mA	25μA
0.85V	±20mV	MM3411Z08NRE	MM3411Z08URE	MM3411Z08RRE	1.00V	200mA	25μA
0.90V	±20mV	MM3411A09NRE	MM3411A09URE	MM3411A09RRE	1.00V	200mA	25μA
0.95V	±20mV	MM3411Z09NRE	MM3411Z09URE	MM3411Z09RRE	1.00V	200mA	25μA
1.00V	±20mV	MM3411A10NRE	MM3411A10URE	MM3411A10RRE	0.90V	200mA	25μA
1.05V	±20mV	MM3411Z10NRE	MM3411Z10URE	MM3411Z10RRE	0.90V	200mA	25μA
1.10V	±20mV	MM3411A11NRE	MM3411A11URE	MM3411A11RRE	0.90V	200mA	25μA
1.15V	±20mV	MM3411Z11NRE	MM3411Z11URE	MM3411Z11RRE	0.90V	200mA	25μA
1.20V	±20mV	MM3411A12NRE	MM3411A12URE	MM3411A12RRE	0.90V	200mA	25μA
1.25V	±20mV	MM3411Z12NRE	MM3411Z12URE	MM3411Z12RRE	0.90V	200mA	25μA
1.30V	±20mV	MM3411A13NRE	MM3411A13URE	MM3411A13RRE	0.78V	200mA	25μA
1.35V	±20mV	MM3411Z13NRE	MM3411Z13URE	MM3411Z13RRE	0.78V	200mA	25μA
1.40V	±20mV	MM3411A14NRE	MM3411A14URE	MM3411A14RRE	0.78V	200mA	25μA
1.45V	±20mV	MM3411Z14NRE	MM3411Z14URE	MM3411Z14RRE	0.78V	200mA	25μA
1.50V	±20mV	MM3411A15NRE	MM3411A15URE	MM3411A15RRE	0.78V	200mA	25μA
1.55V	±20mV	MM3411Z15NRE	MM3411Z15URE	MM3411Z15RRE	0.78V	200mA	25μA
1.60V	±20mV	MM3411A16NRE	MM3411A16URE	MM3411A16RRE	0.67V	200mA	25μA
1.65V	±20mV	MM3411Z16NRE	MM3411Z16URE	MM3411Z16RRE	0.67V	200mA	25μA
1.70V	±20mV	MM3411A17NRE	MM3411A17URE	MM3411A17RRE	0.67V	200mA	25μA
1.75V	±20mV	MM3411Z17NRE	MM3411Z17URE	MM3411Z17RRE	0.67V	200mA	25μA
1.80V	±20mV	MM3411A18NRE	MM3411A18URE	MM3411A18RRE	0.67V	200mA	25μA
1.85V	±20mV	MM3411Z18NRE	MM3411Z18URE	MM3411Z18RRE	0.67V	200mA	25μA
1.90V	±20mV	MM3411A19NRE	MM3411A19URE	MM3411A19RRE	0.62V	200mA	25μA
1.95V	±20mV	MM3411Z19NRE	MM3411Z19URE	MM3411Z19RRE	0.62V	200mA	25μA
2.00V	±1%	MM3411A20NRE	MM3411A20URE	MM3411A20RRE	0.62V	200mA	25μA
2.05V	±1%	MM3411Z20NRE	MM3411Z20URE	MM3411Z20RRE	0.62V	200mA	25μA
2.10V	±1%	MM3411A21NRE	MM3411A21URE	MM3411A21RRE	0.62V	200mA	25μA
2.15V	±1%	MM3411Z21NRE	MM3411Z21URE	MM3411Z21RRE	0.62V	200mA	25μA
2.20V	±1%	MM3411A22NRE	MM3411A22URE	MM3411A22RRE	0.62V	200mA	25μA
2.25V	±1%	MM3411Z22NRE	MM3411Z22URE	MM3411Z22RRE	0.62V	200mA	25μA
2.30V	±1%	MM3411A23NRE	MM3411A23URE	MM3411A23RRE	0.62V	200mA	25μA
2.35V	±1%	MM3411Z23NRE	MM3411Z23URE	MM3411Z23RRE	0.62V	200mA	25μA
2.40V	±1%	MM3411A24NRE	MM3411A24URE	MM3411A24RRE	0.62V	200mA	25μA
2.45V	±1%	MM3411Z24NRE	MM3411Z24URE	MM3411Z24RRE	0.62V	200mA	25μA
2.50V	±1%	MM3411A25NRE	MM3411A25URE	MM3411A25RRE	0.40V	200mA	25μA
2.55V	±1%	MM3411Z25NRE	MM3411Z25URE	MM3411Z25RRE	0.40V	200mA	25μA
2.60V	±1%	MM3411A26NRE	MM3411A26URE	MM3411A26RRE	0.40V	200mA	25μA
2.65V	±1%	MM3411Z26NRE	MM3411Z26URE	MM3411Z26RRE	0.40V	200mA	25μA
2.70V	±1%	MM3411A27NRE	MM3411A27URE	MM3411A27RRE	0.40V	200mA	25μA
2.75V	±1%	MM3411Z27NRE	MM3411Z27URE	MM3411Z27RRE	0.40V	200mA	25μA
2.80V	±1%	MM3411A28NRE	MM3411A28URE	MM3411A28RRE	0.40V	200mA	25μA
2.85V	±1%	MM3411Z28NRE	MM3411Z28URE	MM3411Z28RRE	0.40V	200mA	25μA
2.90V	±1%	MM3411A29NRE	MM3411A29URE	MM3411A29RRE	0.40V	200mA	25μA
2.95V	±1%	MM3411Z29NRE	MM3411Z29URE	MM3411Z29RRE	0.40V	200mA	25μA
3.00V	±1%	MM3411A30NRE	MM3411A30URE	MM3411A30RRE	0.40V	200mA	25μA
3.05V	±1%	MM3411Z30NRE	MM3411Z30URE	MM3411Z30RRE	0.40V	200mA	25μA
3.10V	±1%	MM3411A31NRE	MM3411A31URE	MM3411A31RRE	0.40V	200mA	25μA
3.15V	±1%	MM3411Z31NRE	MM3411Z31URE	MM3411Z31RRE	0.40V	200mA	25μA
3.20V	±1%	MM3411A32NRE	MM3411A32URE	MM3411A32RRE	0.40V	200mA	25μA
3.25V	±1%	MM3411Z32NRE	MM3411Z32URE	MM3411Z32RRE	0.40V	200mA	25μA
3.30V	±1%	MM3411A33NRE	MM3411A33URE	MM3411A33RRE	0.40V	200mA	25μA
3.35V	±1%	MM3411Z33NRE	MM3411Z33URE	MM3411Z33RRE	0.40V	200mA	25μA
3.40V	±1%	MM3411A34NRE	MM3411A34URE	MM3411A34RRE	0.40V	200mA	25μA
3.45V	±1%	MM3411Z34NRE	MM3411Z34URE	MM3411Z34RRE	0.40V	200mA	25μA

Downloaded from Arrow.com.

Output Voltage	Accuracy	Parts No.			Dropout Voltage (Typ.) Io=200mA	Output Current	No-Load Input Current (Typ.)
		SOT-25A Package (3,000pcs/Reel)	SC-82ABB Package (3,000pcs/Reel)	PLP-4A Package (5,000pcs/Reel)			
3.50V	±1%	MM3411A35NRE	MM3411A35URE	MM3411A35RRE	0.30V	200mA	25μA
3.55V	±1%	MM3411Z35NRE	MM3411Z35URE	MM3411Z35RRE	0.30V	200mA	25μA
3.60V	±1%	MM3411A36NRE	MM3411A36URE	MM3411A36RRE	0.30V	200mA	25μA
3.65V	±1%	MM3411Z36NRE	MM3411Z36URE	MM3411Z36RRE	0.30V	200mA	25μA
3.70V	±1%	MM3411A37NRE	MM3411A37URE	MM3411A37RRE	0.30V	200mA	25μA
3.75V	±1%	MM3411Z37NRE	MM3411Z37URE	MM3411Z37RRE	0.30V	200mA	25μA
3.80V	±1%	MM3411A38NRE	MM3411A38URE	MM3411A38RRE	0.30V	200mA	25μA
3.85V	±1%	MM3411Z38NRE	MM3411Z38URE	MM3411Z38RRE	0.30V	200mA	25μA
3.90V	±1%	MM3411A39NRE	MM3411A39URE	MM3411A39RRE	0.30V	200mA	25μA
3.95V	±1%	MM3411Z39NRE	MM3411Z39URE	MM3411Z39RRE	0.30V	200mA	25μA
4.00V	±1%	MM3411A40NRE	MM3411A40URE	MM3411A40RRE	0.30V	200mA	25μA
4.05V	±1%	MM3411Z40NRE	MM3411Z40URE	MM3411Z40RRE	0.30V	200mA	25μA
4.10V	±1%	MM3411A41NRE	MM3411A41URE	MM3411A41RRE	0.30V	200mA	25μA
4.15V	±1%	MM3411Z41NRE	MM3411Z41URE	MM3411Z41RRE	0.30V	200mA	25μA
4.20V	±1%	MM3411A42NRE	MM3411A42URE	MM3411A42RRE	0.30V	200mA	25μA
4.25V	±1%	MM3411Z42NRE	MM3411Z42URE	MM3411Z42RRE	0.30V	200mA	25μA
4.30V	±1%	MM3411A43NRE	MM3411A43URE	MM3411A43RRE	0.30V	200mA	25μA
4.35V	±1%	MM3411Z43NRE	MM3411Z43URE	MM3411Z43RRE	0.30V	200mA	25μA
4.40V	±1%	MM3411A44NRE	MM3411A44URE	MM3411A44RRE	0.30V	200mA	25μA
4.45V	±1%	MM3411Z44NRE	MM3411Z44URE	MM3411Z44RRE	0.30V	200mA	25μA
4.50V	±1%	MM3411A45NRE	MM3411A45URE	MM3411A45RRE	0.25V	200mA	25μA
4.55V	±1%	MM3411Z45NRE	MM3411Z45URE	MM3411Z45RRE	0.25V	200mA	25μA
4.60V	±1%	MM3411A46NRE	MM3411A46URE	MM3411A46RRE	0.25V	200mA	25μA
4.65V	±1%	MM3411Z46NRE	MM3411Z46URE	MM3411Z46RRE	0.25V	200mA	25μA
4.70V	±1%	MM3411A47NRE	MM3411A47URE	MM3411A47RRE	0.25V	200mA	25μA
4.75V	±1%	MM3411Z47NRE	MM3411Z47URE	MM3411Z47RRE	0.25V	200mA	25μA
4.80V	±1%	MM3411A48NRE	MM3411A48URE	MM3411A48RRE	0.25V	200mA	25μA
4.85V	±1%	MM3411Z48NRE	MM3411Z48URE	MM3411Z48RRE	0.25V	200mA	25μA
4.90V	±1%	MM3411A49NRE	MM3411A49URE	MM3411A49RRE	0.25V	200mA	25μA
4.95V	±1%	MM3411Z49NRE	MM3411Z49URE	MM3411Z49RRE	0.25V	200mA	25μA
5.00V	±1%	MM3411A50NRE	MM3411A50URE	MM3411A50RRE	0.25V	200mA	25μA

Downloaded from Arrow.com.

Rush current protection 200mA regulator IC

MM3566 Series

Outline

MM3566 is a Capacitor-less/Ultralow quiescent current 200mA LDO. The IC can be stable behavior without Input/Output capacitor. Therefore the number of external capacitor is reduced.
The IC can be better low quiescent current and load transient by bias boost circuit.
Therefore the IC is ideal for mobile applications.

Applications

(1) Smart phones
(2) Tablet PCs
(3) Mobile phones
(4) Portable music Players
(5) Digital still cameras
(6) Portable games

Features (Unless otherwise specified, Ta=+25°C)

(1) Input voltage range ..... 1.7V to 6.0V
(2) Output voltage range..... 1.2V to 5.0V
(3) Output voltage accuracy. VOUT±1.0%(Vo>2V)
(4) Maximum output current. 200mA
(5) Current Consumption ..... 0.1μA typ. (OFF)
0.9μA typ.
(No-load, Vo=1.2V to 3.3V)
1.2μA typ.
(No-Load, Vo=3.4V to 5.0V)
(6) Dropout voltage ..... 0.35V typ. / 0.50V max
(Io=200mA, Vo=3.0 to 3.3V)
(7) Line regulation ..... 0.02%/V typ. / 0.1%/V max. (Io=1mA)
(8) Load regulation..... 15mV typ. / 40mV max.
(Io=1mA to 200mA)
(9) Vout Temperature coefficient
±80ppm/°C typ.
(10) Output capacitor ..... Unnecessary

Pin assignment

SOT-25A

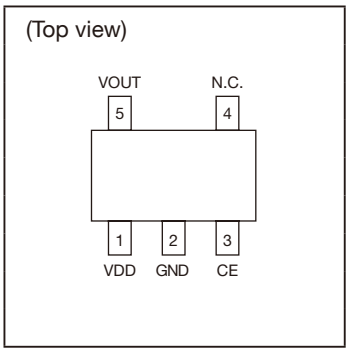

SC-82ABB

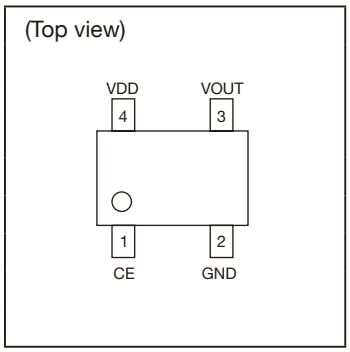

PLP-4A

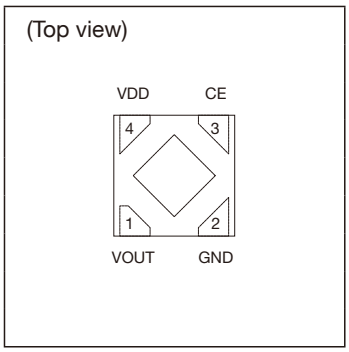

Model name structure

M M 3 5 6 6 □ □ □ □ R E

Embossed taping E
Housing R

Package code
PLP-4A R
SC-82ABB U
SOT-25A N

Output voltage
1.2V to 5.0V (0.1V step) 12 to 50

Function type
CE=H-Active, with Discharge Function A
CE=L-Active, with Discharge Function B
CE=H-Active, without Discharge Function C

Downloaded from Arrow.com.

Selection guide

Output Voltage	Accuracy	Parts No.			Dropout Voltage (Typ.) Io=200mA	Output Current	No-Load Input Current (Typ.)
		SOT-25A Package (3,000pcs/Reel)	SC-82ABB Package (3,000pcs/Reel)	PLP-4A Package (5,000pcs/Reel)			
1.2V	±20mV	MM3566A12NRE	MM3566A12URE	MM3566A12RRE	1.01V	200mA	0.9μA
1.3V	±20mV	MM3566A13NRE	MM3566A13URE	MM3566A13RRE	1.01V	200mA	0.9μA
1.4V	±20mV	MM3566A14NRE	MM3566A14URE	MM3566A14RRE	1.01V	200mA	0.9μA
1.5V	±20mV	MM3566A15NRE	MM3566A15URE	MM3566A15RRE	0.71V	200mA	0.9μA
1.6V	±20mV	MM3566A16NRE	MM3566A16URE	MM3566A16RRE	0.71V	200mA	0.9μA
1.7V	±20mV	MM3566A17NRE	MM3566A17URE	MM3566A17RRE	0.59V	200mA	0.9μA
1.8V	±20mV	MM3566A18NRE	MM3566A18URE	MM3566A18RRE	0.59V	200mA	0.9μA
1.9V	±20mV	MM3566A19NRE	MM3566A19URE	MM3566A19RRE	0.59V	200mA	0.9μA
2.0V	±20mV	MM3566A20NRE	MM3566A20URE	MM3566A20RRE	0.45V	200mA	0.9μA
2.1V	±1%	MM3566A21NRE	MM3566A21URE	MM3566A21RRE	0.45V	200mA	0.9μA
2.2V	±1%	MM3566A22NRE	MM3566A22URE	MM3566A22RRE	0.45V	200mA	0.9μA
2.3V	±1%	MM3566A23NRE	MM3566A23URE	MM3566A23RRE	0.45V	200mA	0.9μA
2.4V	±1%	MM3566A24NRE	MM3566A24URE	MM3566A24RRE	0.45V	200mA	0.9μA
2.5V	±1%	MM3566A25NRE	MM3566A25URE	MM3566A25RRE	0.42V	200mA	0.9μA
2.6V	±1%	MM3566A26NRE	MM3566A26URE	MM3566A26RRE	0.42V	200mA	0.9μA
2.7V	±1%	MM3566A27NRE	MM3566A27URE	MM3566A27RRE	0.42V	200mA	0.9μA
2.8V	±1%	MM3566A28NRE	MM3566A28URE	MM3566A28RRE	0.42V	200mA	0.9μA
2.9V	±1%	MM3566A29NRE	MM3566A29URE	MM3566A29RRE	0.42V	200mA	0.9μA
3.0V	±1%	MM3566A30NRE	MM3566A30URE	MM3566A30RRE	0.35V	200mA	0.9μA
3.1V	±1%	MM3566A31NRE	MM3566A31URE	MM3566A31RRE	0.35V	200mA	0.9μA
3.2V	±1%	MM3566A32NRE	MM3566A32URE	MM3566A32RRE	0.35V	200mA	0.9μA
3.3V	±1%	MM3566A33NRE	MM3566A33URE	MM3566A33RRE	0.35V	200mA	0.9μA
3.4V	±1%	MM3566A34NRE	MM3566A34URE	MM3566A34RRE	0.32V	200mA	1.2μA
3.5V	±1%	MM3566A35NRE	MM3566A35URE	MM3566A35RRE	0.32V	200mA	1.2μA
3.6V	±1%	MM3566A36NRE	MM3566A36URE	MM3566A36RRE	0.32V	200mA	1.2μA
3.7V	±1%	MM3566A37NRE	MM3566A37URE	MM3566A37RRE	0.32V	200mA	1.2μA
3.8V	±1%	MM3566A38NRE	MM3566A38URE	MM3566A38RRE	0.32V	200mA	1.2μA
3.9V	±1%	MM3566A39NRE	MM3566A39URE	MM3566A39RRE	0.32V	200mA	1.2μA
4.0V	±1%	MM3566A40NRE	MM3566A40URE	MM3566A40RRE	0.32V	200mA	1.2μA
4.1V	±1%	MM3566A41NRE	MM3566A41URE	MM3566A41RRE	0.32V	200mA	1.2μA
4.2V	±1%	MM3566A42NRE	MM3566A42URE	MM3566A42RRE	0.32V	200mA	1.2μA
4.3V	±1%	MM3566A43NRE	MM3566A43URE	MM3566A43RRE	0.32V	200mA	1.2μA
4.4V	±1%	MM3566A44NRE	MM3566A44URE	MM3566A44RRE	0.32V	200mA	1.2μA
4.5V	±1%	MM3566A45NRE	MM3566A45URE	MM3566A45RRE	0.32V	200mA	1.2μA
4.6V	±1%	MM3566A46NRE	MM3566A46URE	MM3566A46RRE	0.32V	200mA	1.2μA
4.7V	±1%	MM3566A47NRE	MM3566A47URE	MM3566A47RRE	0.32V	200mA	1.2μA
4.8V	±1%	MM3566A48NRE	MM3566A48URE	MM3566A48RRE	0.32V	200mA	1.2μA
4.9V	±1%	MM3566A49NRE	MM3566A49URE	MM3566A49RRE	0.32V	200mA	1.2μA
5.0V	±1%	MM3566A50NRE	MM3566A50URE	MM3566A50RRE	0.32V	200mA	1.2μA

Downloaded from Arrow.com.

15V withstand voltage 200mA regulator IC

MM1836, MM1856 Series

Outline

This IC is a 200mA Low dropout regulator IC with ON/OFF control of the output voltage.
The IC applies to a standard home equipments, for a maximum operating voltage is 14V.

Applications

(1) Smart phones
(2) Tablet PCs
(3) Mobile phones
(4) Portable music Players
(5) Digital still cameras
(6) Portable games

Features (Unless otherwise specified, Ta=+25°C)

(1) Input voltage range .....1.8V to 14.0V
(2) Output voltage range .....1.5V to 5.0V
(3) Output voltage accuracy.....VOUT±2.0%
(4) Maximum output current.....200mA
(5) Current consumption .....75μA typ. (No-load)
0μA typ. (OFF)
(6) Output capacitor 1μF
(7) Dropout voltage.....300mV typ. (Io=200mA)
(8) Line regulation.....0.1% / V max.
(9) Load .....regulation15mV max.
(Io=1mA to 200mA)
(10) Ripple rejection .....70dB typ. (f=1kHz)

Pin assignment

■ SOT-25A

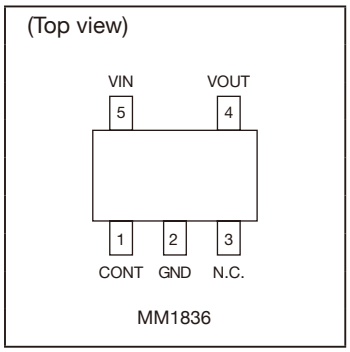

■ SOT-25A

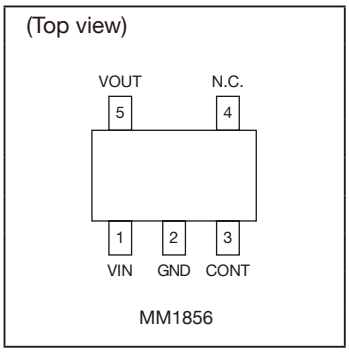

■ SC-82ABB

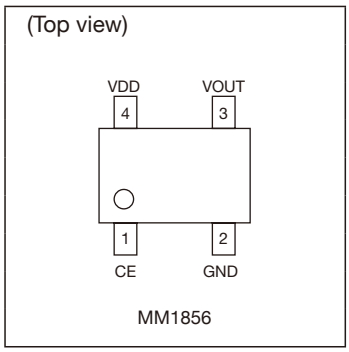

Model name structure

M M 1 8 3 6 A □ □ □ R E
M M 1 8 5 6 A □ □ □ R E

Embossed taping	E
Housing	R
Package code	
SC-82ABB	U
SOT-25A	N
Output voltage	
e.g.) 3.3V	33

Downloaded from Arrow.com.

Selection guide

Output Voltage	Accuracy	Parts No.			Dropout Voltage (Typ.) Io=200mA	Output Current	No-Load Input Current (Typ.)
		MM1836 Series	MM1856 Series				
		SOT-25A Package (3,000pcs/Reel)	SOT-25A Package (3,000pcs/Reel)	SC-82ABB Package (3,000pcs/Reel)			
1.5V	±2.0%	MM1836A15NRE	MM1856A15NRE	MM1856A15URE	*	200mA	75μA
1.6V	±2.0%	MM1836A16NRE	MM1856A16NRE	MM1856A16URE	*	200mA	75μA
1.7V	±2.0%	MM1836A17NRE	MM1856A17NRE	MM1856A17URE	*	200mA	75μA
1.8V	±2.0%	MM1836A18NRE	MM1856A18NRE	MM1856A18URE	*	200mA	75μA
1.9V	±2.0%	MM1836A19NRE	MM1856A19NRE	MM1856A19URE	*	200mA	75μA
2.0V	±2.0%	MM1836A20NRE	MM1856A20NRE	MM1856A20URE	*	200mA	75μA
2.1V	±2.0%	MM1836A21NRE	MM1856A21NRE	MM1856A21URE	0.30V	200mA	75μA
2.2V	±2.0%	MM1836A22NRE	MM1856A22NRE	MM1856A22URE	0.30V	200mA	75μA
2.3V	±2.0%	MM1836A23NRE	MM1856A23NRE	MM1856A23URE	0.30V	200mA	75μA
2.4V	±2.0%	MM1836A24NRE	MM1856A24NRE	MM1856A24URE	0.30V	200mA	75μA
2.5V	±2.0%	MM1836A25NRE	MM1856A25NRE	MM1856A25URE	0.30V	200mA	75μA
2.6V	±2.0%	MM1836A26NRE	MM1856A26NRE	MM1856A26URE	0.30V	200mA	75μA
2.7V	±2.0%	MM1836A27NRE	MM1856A27NRE	MM1856A27URE	0.30V	200mA	75μA
2.8V	±2.0%	MM1836A28NRE	MM1856A28NRE	MM1856A28URE	0.30V	200mA	75μA
2.9V	±2.0%	MM1836A29NRE	MM1856A29NRE	MM1856A29URE	0.30V	200mA	75μA
3.0V	±2.0%	MM1836A30NRE	MM1856A30NRE	MM1856A30URE	0.30V	200mA	75μA
3.1V	±2.0%	MM1836A31NRE	MM1856A31NRE	MM1856A31URE	0.30V	200mA	75μA
3.2V	±2.0%	MM1836A32NRE	MM1856A32NRE	MM1856A32URE	0.30V	200mA	75μA
3.3V	±2.0%	MM1836A33NRE	MM1856A33NRE	MM1856A33URE	0.30V	200mA	75μA
3.4V	±2.0%	MM1836A34NRE	MM1856A34NRE	MM1856A34URE	0.30V	200mA	75μA
3.5V	±2.0%	MM1836A35NRE	MM1856A35NRE	MM1856A35URE	0.30V	200mA	75μA
3.6V	±2.0%	MM1836A36NRE	MM1856A36NRE	MM1856A36URE	0.30V	200mA	75μA
3.7V	±2.0%	MM1836A37NRE	MM1856A37NRE	MM1856A37URE	0.30V	200mA	75μA
3.8V	±2.0%	MM1836A38NRE	MM1856A38NRE	MM1856A38URE	0.30V	200mA	75μA
3.9V	±2.0%	MM1836A39NRE	MM1856A39NRE	MM1856A39URE	0.30V	200mA	75μA
4.0V	±2.0%	MM1836A40NRE	MM1856A40NRE	MM1856A40URE	0.30V	200mA	75μA
4.1V	±2.0%	MM1836A41NRE	MM1856A41NRE	MM1856A41URE	0.30V	200mA	75μA
4.2V	±2.0%	MM1836A42NRE	MM1856A42NRE	MM1856A42URE	0.30V	200mA	75μA
4.3V	±2.0%	MM1836A43NRE	MM1856A43NRE	MM1856A43URE	0.30V	200mA	75μA
4.4V	±2.0%	MM1836A44NRE	MM1856A44NRE	MM1856A44URE	0.30V	200mA	75μA
4.5V	±2.0%	MM1836A45NRE	MM1856A45NRE	MM1856A45URE	0.30V	200mA	75μA
4.6V	±2.0%	MM1836A46NRE	MM1856A46NRE	MM1856A46URE	0.30V	200mA	75μA
4.7V	±2.0%	MM1836A47NRE	MM1856A47NRE	MM1856A47URE	0.30V	200mA	75μA
4.8V	±2.0%	MM1836A48NRE	MM1856A48NRE	MM1856A48URE	0.30V	200mA	75μA
4.9V	±2.0%	MM1836A49NRE	MM1856A49NRE	MM1856A49URE	0.30V	200mA	75μA
5.0V	±2.0%	MM1836A50NRE	MM1856A50NRE	MM1856A50URE	0.30V	200mA	75μA

* The parameter is not guaranteed in the model less than V_{OUT}=2.0V .

Downloaded from Arrow.com.

200mA LDO with reverse bias protection

MM1839 Series

Outline

This IC is a 200mA LDO with a reverse bias protection function.
The IC applies to a standard home equipments, for a maximum operating voltage is 14V.
In addition, a protection diode is not necessary because a reverse bias protection function is built in it.

Applications

(1) Smart phones
(2) Tablet PCs
(3) Mobile phones
(4) Portable music Players
(5) Digital still cameras
(6) Portable games

Features (Unless otherwise specified, Ta=+25℃)

(1) Input voltage range .....1.8V to 14.0V
(2) Output voltage range .....1.5V to 5.0V
(3) Output voltage accuracy.....VOUT±2.0%
(4) Maximum output current.....200mA
(5) Current consumption .....85μA typ.
(No-Load Input Current)
0μA typ. (OFF)
(6) Output capacitor 1μF
(7) Dropout voltage.....0.30V typ.
(VOUT=3.0V, Io=200mA)
(8) Line regulation.....0.1% / V max.
(9) Load regulation .....15mV typ. (Io=1mA to 200mA)
(10) Ripple rejection .....70dB typ. (f=1kHz)

Pin assignment

■ SOT-25A

(Top view)

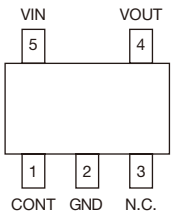

■ SSON-6E

(Top view)

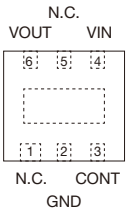

Model name structure

M M 1 8 3 9 A □ □ □ R E

Embossed taping	E
Housing	R
Package code	
SOT-25A	N
SSON-6E	R
Output voltage	
e.g.) 3.3V	33

Downloaded from Arrow.com.

Selection guide

Output Voltage	Accuracy	Parts No.		Dropout Voltage (Typ.) Io=200mA	Output Current	No-Load Input Current (Typ.)
		SOT-25A Package (3,000pcs/Reel)	SSON-6E Package (3,000pcs/Reel)			
1.5V	±2.0%	MM1839A15NRE	MM1839A15RRE	0.30V	200mA	85μA
1.6V	±2.0%	MM1839A16NRE	MM1839A16RRE	0.30V	200mA	85μA
1.7V	±2.0%	MM1839A17NRE	MM1839A17RRE	0.30V	200mA	85μA
1.8V	±2.0%	MM1839A18NRE	MM1839A18RRE	0.30V	200mA	85μA
1.9V	±2.0%	MM1839A19NRE	MM1839A19RRE	0.30V	200mA	85μA
2.0V	±2.0%	MM1839A20NRE	MM1839A20RRE	0.30V	200mA	85μA
2.1V	±2.0%	MM1839A21NRE	MM1839A21RRE	0.30V	200mA	85μA
2.2V	±2.0%	MM1839A22NRE	MM1839A22RRE	0.30V	200mA	85μA
2.3V	±2.0%	MM1839A23NRE	MM1839A23RRE	0.30V	200mA	85μA
2.4V	±2.0%	MM1839A24NRE	MM1839A24RRE	0.30V	200mA	85μA
2.5V	±2.0%	MM1839A25NRE	MM1839A25RRE	0.30V	200mA	85μA
2.6V	±2.0%	MM1839A26NRE	MM1839A26RRE	0.30V	200mA	85μA
2.7V	±2.0%	MM1839A27NRE	MM1839A27RRE	0.30V	200mA	85μA
2.8V	±2.0%	MM1839A28NRE	MM1839A28RRE	0.30V	200mA	85μA
2.9V	±2.0%	MM1839A29NRE	MM1839A29RRE	0.30V	200mA	85μA
3.0V	±2.0%	MM1839A30NRE	MM1839A30RRE	0.30V	200mA	85μA
3.1V	±2.0%	MM1839A31NRE	MM1839A31RRE	0.30V	200mA	85μA
3.2V	±2.0%	MM1839A32NRE	MM1839A32RRE	0.30V	200mA	85μA
3.3V	±2.0%	MM1839A33NRE	MM1839A33RRE	0.30V	200mA	85μA
3.4V	±2.0%	MM1839A34NRE	MM1839A34RRE	0.30V	200mA	85μA
3.5V	±2.0%	MM1839A35NRE	MM1839A35RRE	0.30V	200mA	85μA
3.6V	±2.0%	MM1839A36NRE	MM1839A36RRE	0.30V	200mA	85μA
3.7V	±2.0%	MM1839A37NRE	MM1839A37RRE	0.30V	200mA	85μA
3.8V	±2.0%	MM1839A38NRE	MM1839A38RRE	0.30V	200mA	85μA
3.9V	±2.0%	MM1839A39NRE	MM1839A39RRE	0.30V	200mA	85μA
4.0V	±2.0%	MM1839A40NRE	MM1839A40RRE	0.30V	200mA	85μA
4.1V	±2.0%	MM1839A41NRE	MM1839A41RRE	0.30V	200mA	85μA
4.2V	±2.0%	MM1839A42NRE	MM1839A42RRE	0.30V	200mA	85μA
4.3V	±2.0%	MM1839A43NRE	MM1839A43RRE	0.30V	200mA	85μA
4.4V	±2.0%	MM1839A44NRE	MM1839A44RRE	0.30V	200mA	85μA
4.5V	±2.0%	MM1839A45NRE	MM1839A45RRE	0.30V	200mA	85μA
4.6V	±2.0%	MM1839A46NRE	MM1839A46RRE	0.30V	200mA	85μA
4.7V	±2.0%	MM1839A47NRE	MM1839A47RRE	0.30V	200mA	85μA
4.8V	±2.0%	MM1839A48NRE	MM1839A48RRE	0.30V	200mA	85μA
4.9V	±2.0%	MM1839A49NRE	MM1839A49RRE	0.30V	200mA	85μA
5.0V	±2.0%	MM1839A50NRE	MM1839A50RRE	0.30V	200mA	85μA

Downloaded from Arrow.com.

Low noise 200mA negative output regulator

MM1898 Series

Outline

MM1898 is a low noise negative output 200mA LDO by bipolar process.
The target applications by noise reduction pin are for a power supply of highly sensitive image sensor.
The output range is from -0.9V to -5.0V (0.1V steps), it can use to the negative power supply of CMOS image sensor.

Applications

(1) Power supply for Image sensor

Features (Unless otherwise specified, Ta=+25°C)

(1) Input voltage range ..... –2V to –10V
(2) Output voltage range ..... –9.5V to –5.0V
(3) Output voltage accuracy .. VOUT±1% (Vo<–1.5V)
VOUT±15mV (–1.5≦Vo≦–0.9V)
(4) Maximum output current..... 200mA
(5) Current consumption ..... 3μA typ. (OFF)
160μA typ. (No-Load)
(6) Dropout voltage..... 0.5V typ. / 0.8V max. (Io=200mA)
(7) Line regulation..... 0.01%/V typ. / 0.10%/V max.
(8) Load regulation ..... 15mV typ. / 100mV max.
(Io=1mA to 200mA)
(9) Ripple rejection ..... 70dB typ. (f=1kHz)
(10) Output noise voltage..... 30μVrms typ.(Vo=–1.4V, Cn=0.01μF)
(11) Output rise time..... 5ms typ. (Cn=0.01μF, Iout=0mA)

Pin assignment

■ SOT-25A

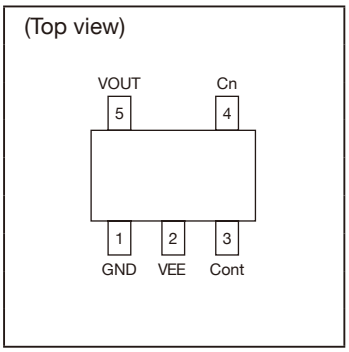

■ SSON-6A

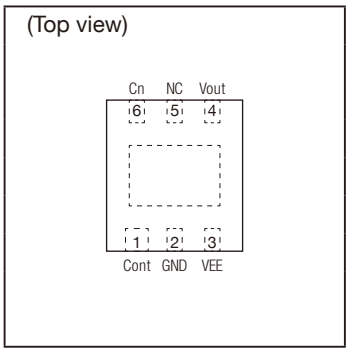

Model name structure

M M 1 8 9 8 □ □ □ □ R E

Embossed taping	E	
Housing	R	
Package code		
SOT-25A	N	
SSON-6A	R	
Output voltage		
–0.9V to –5.0 (0.1V step)		09 to 50
Function type		
CE=H-Active	A	

Downloaded from Arrow.com.

Selection guide

Output Voltage	Accuracy	Parts No.		Dropout Voltage (Typ.) Io=200mA	Output Current	No-Load Input Current (Typ.)
		SOT-25A Package (3,000pcs/Reel)	SSON-6A Package (3,000pcs/Reel)			
–0.9V	±15mV	MM1898A09NRE	MM1898A09RRE	0.5V	200mA	160μA
–1.0V	±15mV	MM1898A10NRE	MM1898A10RRE	0.5V	200mA	160μA
–1.1V	±15mV	MM1898A11NRE	MM1898A11RRE	0.5V	200mA	160μA
–1.2V	±15mV	MM1898A12NRE	MM1898A12RRE	0.5V	200mA	160μA
–1.3V	±15mV	MM1898A13NRE	MM1898A13RRE	0.5V	200mA	160μA
–1.4V	±15mV	MM1898A14NRE	MM1898A14RRE	0.5V	200mA	160μA
–1.5V	±1%	MM1898A15NRE	MM1898A15RRE	0.5V	200mA	160μA
–1.6V	±1%	MM1898A16NRE	MM1898A16RRE	0.5V	200mA	160μA
–1.7V	±1%	MM1898A17NRE	MM1898A17RRE	0.5V	200mA	160μA
–1.8V	±1%	MM1898A18NRE	MM1898A18RRE	0.5V	200mA	160μA
–1.9V	±1%	MM1898A19NRE	MM1898A19RRE	0.5V	200mA	160μA
–2.0V	±1%	MM1898A20NRE	MM1898A20RRE	0.5V	200mA	160μA
–2.1V	±1%	MM1898A21NRE	MM1898A21RRE	0.5V	200mA	160μA
–2.2V	±1%	MM1898A22NRE	MM1898A22RRE	0.5V	200mA	160μA
–2.3V	±1%	MM1898A23NRE	MM1898A23RRE	0.5V	200mA	160μA
–2.4V	±1%	MM1898A24NRE	MM1898A24RRE	0.5V	200mA	160μA
–2.5V	±1%	MM1898A25NRE	MM1898A25RRE	0.5V	200mA	160μA
–2.6V	±1%	MM1898A26NRE	MM1898A26RRE	0.5V	200mA	160μA
–2.7V	±1%	MM1898A27NRE	MM1898A27RRE	0.5V	200mA	160μA
–2.8V	±1%	MM1898A28NRE	MM1898A28RRE	0.5V	200mA	160μA
–2.9V	±1%	MM1898A29NRE	MM1898A29RRE	0.5V	200mA	160μA
–3.0V	±1%	MM1898A30NRE	MM1898A30RRE	0.5V	200mA	160μA
–3.1V	±1%	MM1898A31NRE	MM1898A31RRE	0.5V	200mA	160μA
–3.2V	±1%	MM1898A32NRE	MM1898A32RRE	0.5V	200mA	160μA
–3.3V	±1%	MM1898A33NRE	MM1898A33RRE	0.5V	200mA	160μA
–3.4V	±1%	MM1898A34NRE	MM1898A34RRE	0.5V	200mA	160μA
–3.5V	±1%	MM1898A35NRE	MM1898A35RRE	0.5V	200mA	160μA
–3.6V	±1%	MM1898A36NRE	MM1898A36RRE	0.5V	200mA	160μA
–3.7V	±1%	MM1898A37NRE	MM1898A37RRE	0.5V	200mA	160μA
–3.8V	±1%	MM1898A38NRE	MM1898A38RRE	0.5V	200mA	160μA
–3.9V	±1%	MM1898A39NRE	MM1898A39RRE	0.5V	200mA	160μA
–4.0V	±1%	MM1898A40NRE	MM1898A40RRE	0.5V	200mA	160μA
–4.1V	±1%	MM1898A41NRE	MM1898A41RRE	0.5V	200mA	160μA
–4.2V	±1%	MM1898A42NRE	MM1898A42RRE	0.5V	200mA	160μA
–4.3V	±1%	MM1898A43NRE	MM1898A43RRE	0.5V	200mA	160μA
–4.4V	±1%	MM1898A44NRE	MM1898A44RRE	0.5V	200mA	160μA
–4.5V	±1%	MM1898A45NRE	MM1898A45RRE	0.5V	200mA	160μA
–4.6V	±1%	MM1898A46NRE	MM1898A46RRE	0.5V	200mA	160μA
–4.7V	±1%	MM1898A47NRE	MM1898A47RRE	0.5V	200mA	160μA
–4.8V	±1%	MM1898A48NRE	MM1898A48RRE	0.5V	200mA	160μA
–4.9V	±1%	MM1898A49NRE	MM1898A49RRE	0.5V	200mA	160μA
–5.0V	±1%	MM1898A50NRE	MM1898A50RRE	0.5V	200mA	160μA

Downloaded from Arrow.com.

High speed response 300mA regulator IC

MM3464 Series

Outline

This IC is a high speed response 300mA regulator IC with low current consumption and high ripple rejection.
No load input current is 20µA typ. And ripple rejection is 75dB typ.
Dropout voltage is low at 240mV typ., and the output current is 300mA. Therefore the IC applies to most mobile equipment.

Applications

(1) Smart phones
(2) Tablet PCs
(3) Mobile phones
(4) Portable music Players
(5) Digital still cameras
(6) Portable games

Features (Unless otherwise specified, Ta=+25°C)

(1) Input voltage range .....1.6V to 6.5V
(2) Output voltage range .....1.0V to 5.0V
(3) Output voltage accuracy.....VOUT±1%
(4) Maximum output current.....300mA
(5) Current consumption .....20µA typ.
(No-Load Input Current)
0.01µA typ. (OFF)
(6) Output capacitor 1µF
(7) Dropout voltage.....240mV typ.
(Vo=3V, Io=300mA)
(8) Output short-circuit current 30mA typ.
(9) Line regulation.....0.2% / V typ.
(10) Load regulation .....80mV max.(Io=1mA to 300mA)
(11) Ripple rejection .....75dB typ. (f=1kHz)

Pin assignment

■ SOT-25A

(Top view)

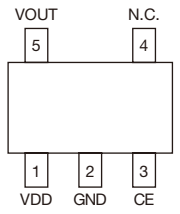

■ SC-82ABB

(Top view)

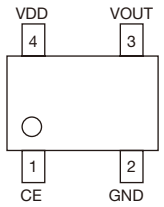

■ PLP-4A

(Top view)

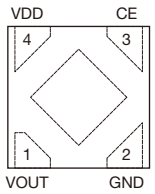

■ SOT89-5A

(Top view)

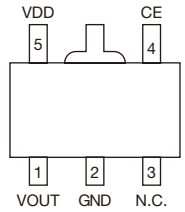

Model name structure

M M 3 4 6 4 □ □ □ □ R E

Embossed taping	E
Housing	R
Package code	
PLP-4A	R
SC-82ABB	U
SOT-25A	N
SOT-89-5A	P
Output voltage (2)	
Output voltage (1)	
0.00V	A
0.05V	Z
e.g.) 3.30V	A33
e.g.) 3.35V	Z33

Downloaded from Arrow.com.

Selection guide

Output Voltage	Accuracy	Parts No.				Dropout Voltage (Typ.) Io=300mA	Output Current	No-Load Input Current (Typ.)
		SOT-25A Package (3,000pcs/Reel)	SC-82ABB Package (3,000pcs/Reel)	PLP-4A Package (5,000pcs/Reel)	SOT89-5A Package (1,000pcs/Reel)			
1.00V	±20mV	MM3464A10NRE	MM3464A10URE	MM3464A10RRE	MM3464A10PRE	850mV	300mA	20μA
1.05V	±20mV	MM3464Z10NRE	MM3464Z10URE	MM3464Z10RRE	MM3464Z10PRE	850mV	300mA	20μA
1.10V	±20mV	MM3464A11NRE	MM3464A11URE	MM3464A11RRE	MM3464A11PRE	850mV	300mA	20μA
1.15V	±20mV	MM3464Z11NRE	MM3464Z11URE	MM3464Z11RRE	MM3464Z11PRE	850mV	300mA	20μA
1.20V	±20mV	MM3464A12NRE	MM3464A12URE	MM3464A12RRE	MM3464A12PRE	690mV	300mA	20μA
1.25V	±20mV	MM3464Z12NRE	MM3464Z12URE	MM3464Z12RRE	MM3464Z12PRE	690mV	300mA	20μA
1.30V	±20mV	MM3464A13NRE	MM3464A13URE	MM3464A13RRE	MM3464A13PRE	690mV	300mA	20μA
1.35V	±20mV	MM3464Z13NRE	MM3464Z13URE	MM3464Z13RRE	MM3464Z13PRE	690mV	300mA	20μA
1.40V	±20mV	MM3464A14NRE	MM3464A14URE	MM3464A14RRE	MM3464A14PRE	600mV	300mA	20μA
1.45V	±20mV	MM3464Z14NRE	MM3464Z14URE	MM3464Z14RRE	MM3464Z14PRE	600mV	300mA	20μA
1.50V	±20mV	MM3464A15NRE	MM3464A15URE	MM3464A15RRE	MM3464A15PRE	600mV	300mA	20μA
1.55V	±20mV	MM3464Z15NRE	MM3464Z15URE	MM3464Z15RRE	MM3464Z15PRE	600mV	300mA	20μA
1.60V	±20mV	MM3464A16NRE	MM3464A16URE	MM3464A16RRE	MM3464A16PRE	500mV	300mA	20μA
1.65V	±20mV	MM3464Z16NRE	MM3464Z16URE	MM3464Z16RRE	MM3464Z16PRE	500mV	300mA	20μA
1.70V	±20mV	MM3464A17NRE	MM3464A17URE	MM3464A17RRE	MM3464A17PRE	500mV	300mA	20μA
1.75V	±20mV	MM3464Z17NRE	MM3464Z17URE	MM3464Z17RRE	MM3464Z17PRE	500mV	300mA	20μA
1.80V	±20mV	MM3464A18NRE	MM3464A18URE	MM3464A18RRE	MM3464A18PRE	500mV	300mA	20μA
1.85V	±20mV	MM3464Z18NRE	MM3464Z18URE	MM3464Z18RRE	MM3464Z18PRE	500mV	300mA	20μA
1.90V	±20mV	MM3464A19NRE	MM3464A19URE	MM3464A19RRE	MM3464A19PRE	500mV	300mA	20μA
1.95V	±20mV	MM3464Z19NRE	MM3464Z19URE	MM3464Z19RRE	MM3464Z19PRE	500mV	300mA	20μA
2.00V	±1%	MM3464A20NRE	MM3464A20URE	MM3464A20RRE	MM3464A20PRE	440mV	300mA	20μA
2.05V	±1%	MM3464Z20NRE	MM3464Z20URE	MM3464Z20RRE	MM3464Z20PRE	440mV	300mA	20μA
2.10V	±1%	MM3464A21NRE	MM3464A21URE	MM3464A21RRE	MM3464A21PRE	440mV	300mA	20μA
2.15V	±1%	MM3464Z21NRE	MM3464Z21URE	MM3464Z21RRE	MM3464Z21PRE	440mV	300mA	20μA
2.20V	±1%	MM3464A22NRE	MM3464A22URE	MM3464A22RRE	MM3464A22PRE	440mV	300mA	20μA
2.25V	±1%	MM3464Z22NRE	MM3464Z22URE	MM3464Z22RRE	MM3464Z22PRE	440mV	300mA	20μA
2.30V	±1%	MM3464A23NRE	MM3464A23URE	MM3464A23RRE	MM3464A23PRE	440mV	300mA	20μA
2.35V	±1%	MM3464Z23NRE	MM3464Z23URE	MM3464Z23RRE	MM3464Z23PRE	440mV	300mA	20μA
2.40V	±1%	MM3464A24NRE	MM3464A24URE	MM3464A24RRE	MM3464A24PRE	440mV	300mA	20μA
2.45V	±1%	MM3464Z24NRE	MM3464Z24URE	MM3464Z24RRE	MM3464Z24PRE	440mV	300mA	20μA
2.50V	±1%	MM3464A25NRE	MM3464A25URE	MM3464A25RRE	MM3464A25PRE	310mV	300mA	20μA
2.55V	±1%	MM3464Z25NRE	MM3464Z25URE	MM3464Z25RRE	MM3464Z25PRE	310mV	300mA	20μA
2.60V	±1%	MM3464A26NRE	MM3464A26URE	MM3464A26RRE	MM3464A26PRE	310mV	300mA	20μA
2.65V	±1%	MM3464Z26NRE	MM3464Z26URE	MM3464Z26RRE	MM3464Z26PRE	310mV	300mA	20μA
2.70V	±1%	MM3464A27NRE	MM3464A27URE	MM3464A27RRE	MM3464A27PRE	310mV	300mA	20μA
2.75V	±1%	MM3464Z27NRE	MM3464Z27URE	MM3464Z27RRE	MM3464Z27PRE	310mV	300mA	20μA
2.80V	±1%	MM3464A28NRE	MM3464A28URE	MM3464A28RRE	MM3464A28PRE	310mV	300mA	20μA
2.85V	±1%	MM3464Z28NRE	MM3464Z28URE	MM3464Z28RRE	MM3464Z28PRE	310mV	300mA	20μA
2.90V	±1%	MM3464A29NRE	MM3464A29URE	MM3464A29RRE	MM3464A29PRE	310mV	300mA	20μA
2.95V	±1%	MM3464Z29NRE	MM3464Z29URE	MM3464Z29RRE	MM3464Z29PRE	310mV	300mA	20μA
3.00V	±1%	MM3464A30NRE	MM3464A30URE	MM3464A30RRE	MM3464A30PRE	240mV	300mA	20μA
3.05V	±1%	MM3464Z30NRE	MM3464Z30URE	MM3464Z30RRE	MM3464Z30PRE	240mV	300mA	20μA
3.10V	±1%	MM3464A31NRE	MM3464A31URE	MM3464A31RRE	MM3464A31PRE	240mV	300mA	20μA
3.15V	±1%	MM3464Z31NRE	MM3464Z31URE	MM3464Z31RRE	MM3464Z31PRE	240mV	300mA	20μA
3.20V	±1%	MM3464A32NRE	MM3464A32URE	MM3464A32RRE	MM3464A32PRE	240mV	300mA	20μA
3.25V	±1%	MM3464Z32NRE	MM3464Z32URE	MM3464Z32RRE	MM3464Z32PRE	240mV	300mA	20μA
3.30V	±1%	MM3464A33NRE	MM3464A33URE	MM3464A33RRE	MM3464A33PRE	240mV	300mA	20μA
3.35V	±1%	MM3464Z33NRE	MM3464Z33URE	MM3464Z33RRE	MM3464Z33PRE	240mV	300mA	20μA
3.40V	±1%	MM3464A34NRE	MM3464A34URE	MM3464A34RRE	MM3464A34PRE	240mV	300mA	20μA
3.45V	±1%	MM3464Z34NRE	MM3464Z34URE	MM3464Z34RRE	MM3464Z34PRE	240mV	300mA	20μA
3.50V	±1%	MM3464A35NRE	MM3464A35URE	MM3464A35RRE	MM3464A35PRE	240mV	300mA	20μA
3.55V	±1%	MM3464Z35NRE	MM3464Z35URE	MM3464Z35RRE	MM3464Z35PRE	240mV	300mA	20μA
3.60V	±1%	MM3464A36NRE	MM3464A36URE	MM3464A36RRE	MM3464A36PRE	240mV	300mA	20μA
3.65V	±1%	MM3464Z36NRE	MM3464Z36URE	MM3464Z36RRE	MM3464Z36PRE	240mV	300mA	20μA

Downloaded from Arrow.com.

Output Voltage	Accuracy	Parts No.				Dropout Voltage (Typ.) Io=300mA	Output Current	No-Load Input Current (Typ.)
		SOT-25A Package (3,000pcs/Reel)	SC-82ABB Package (3,000pcs/Reel)	PLP-4A Package (5,000pcs/Reel)	SOT89-5A Package (1,000pcs/Reel)			
3.70V	±1%	MM3464A37NRE	MM3464A37URE	MM3464A37RRE	MM3464A37PRE	240mV	300mA	20μA
3.75V	±1%	MM3464Z37NRE	MM3464Z37URE	MM3464Z37RRE	MM3464Z37PRE	240mV	300mA	20μA
3.80V	±1%	MM3464A38NRE	MM3464A38URE	MM3464A38RRE	MM3464A38PRE	240mV	300mA	20μA
3.85V	±1%	MM3464Z38NRE	MM3464Z38URE	MM3464Z38RRE	MM3464Z38PRE	240mV	300mA	20μA
3.90V	±1%	MM3464A39NRE	MM3464A39URE	MM3464A39RRE	MM3464A39PRE	240mV	300mA	20μA
3.95V	±1%	MM3464Z39NRE	MM3464Z39URE	MM3464Z39RRE	MM3464Z39PRE	240mV	300mA	20μA
4.00V	±1%	MM3464A40NRE	MM3464A40URE	MM3464A40RRE	MM3464A40PRE	240mV	300mA	20μA
4.05V	±1%	MM3464Z40NRE	MM3464Z40URE	MM3464Z40RRE	MM3464Z40PRE	240mV	300mA	20μA
4.10V	±1%	MM3464A41NRE	MM3464A41URE	MM3464A41RRE	MM3464A41PRE	240mV	300mA	20μA
4.15V	±1%	MM3464Z41NRE	MM3464Z41URE	MM3464Z41RRE	MM3464Z41PRE	240mV	300mA	20μA
4.20V	±1%	MM3464A42NRE	MM3464A42URE	MM3464A42RRE	MM3464A42PRE	240mV	300mA	20μA
4.25V	±1%	MM3464Z42NRE	MM3464Z42URE	MM3464Z42RRE	MM3464Z42PRE	240mV	300mA	20μA
4.30V	±1%	MM3464A43NRE	MM3464A43URE	MM3464A43RRE	MM3464A43PRE	240mV	300mA	20μA
4.35V	±1%	MM3464Z43NRE	MM3464Z43URE	MM3464Z43RRE	MM3464Z43PRE	240mV	300mA	20μA
4.40V	±1%	MM3464A44NRE	MM3464A44URE	MM3464A44RRE	MM3464A44PRE	240mV	300mA	20μA
4.45V	±1%	MM3464Z44NRE	MM3464Z44URE	MM3464Z44RRE	MM3464Z44PRE	240mV	300mA	20μA
4.50V	±1%	MM3464A45NRE	MM3464A45URE	MM3464A45RRE	MM3464A45PRE	240mV	300mA	20μA
4.55V	±1%	MM3464Z45NRE	MM3464Z45URE	MM3464Z45RRE	MM3464Z45PRE	240mV	300mA	20μA
4.60V	±1%	MM3464A46NRE	MM3464A46URE	MM3464A46RRE	MM3464A46PRE	240mV	300mA	20μA
4.65V	±1%	MM3464Z46NRE	MM3464Z46URE	MM3464Z46RRE	MM3464Z46PRE	240mV	300mA	20μA
4.70V	±1%	MM3464A47NRE	MM3464A47URE	MM3464A47RRE	MM3464A47PRE	240mV	300mA	20μA
4.75V	±1%	MM3464Z47NRE	MM3464Z47URE	MM3464Z47RRE	MM3464Z47PRE	240mV	300mA	20μA
4.80V	±1%	MM3464A48NRE	MM3464A48URE	MM3464A48RRE	MM3464A48PRE	240mV	300mA	20μA
4.85V	±1%	MM3464Z48NRE	MM3464Z48URE	MM3464Z48RRE	MM3464Z48PRE	240mV	300mA	20μA
4.90V	±1%	MM3464A49NRE	MM3464A49URE	MM3464A49RRE	MM3464A49PRE	240mV	300mA	20μA
4.95V	±1%	MM3464Z49NRE	MM3464Z49URE	MM3464Z49RRE	MM3464Z49PRE	240mV	300mA	20μA
5.00V	±1%	MM3464A50NRE	MM3464A50URE	MM3464A50RRE	MM3464A50PRE	240mV	300mA	20μA

Downloaded from Arrow.com.

Rush current protection 300mA regulator IC

MM3571 Series

Outline

This IC is a 300mA Low dropout regulator IC with a prevention circuit of rush current.
No load input current is 25μA typ, and it reduce transient drop in voltage with high speed response circuit.
A rush current prevention circuit can control rush current at start up.
The package is ultra-small size of 1010, and it applies to mobile equipment.

Applications

(1) Smart phones
(2) Tablet PCs
(3) Mobile phones
(4) Portable music Players
(5) Digital still cameras
(6) Portable games

Features (Unless otherwise specified, Ta=+25°C)

(1) Input voltage range .....2.0V to 6.5V
(2) Output voltage range .....1.0V to 5.0V
(3) Output voltage accuracy.....VOUT±20mV (VOUT≦1.9V)
VOUT±1.0% (VOUT≧2.0V)
(4) Maximum output current.....300mA
(5) Current consumption .....25μA typ.
(No-Load Input Current)
0.01μA typ. (OFF)
(6) Output capacitor 0.47μF
(7) Dropout voltage.....0.62V typ.
(VOUT=3.0V, Io=300mA)
(8) Output short-circuit current...50mA typ.
(9) Line regulation.....0.01% / V typ.
(10) Load regulation .....30mV typ. (Io=1mA to 300mA)
(11) Ripple rejection .....70dB typ. (f=1kHz)

Pin assignment

■ SOT-25A

(Top view)

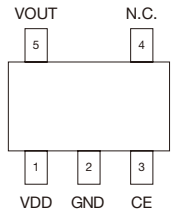

■ SC-82ABB

(Top view)

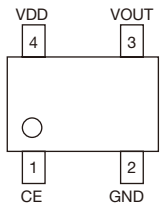

■ PLP-4A

(Top view)

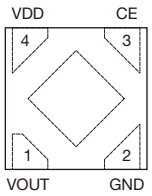

■ SOT89-5A

(Top view)

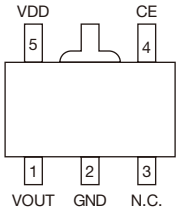

Model name structure

M M 3 5 7 1 A □ □ □ R E

- Embossed taping E
- Housing R
- Package code
  - PLP-4A R
  - SC-82ABB U
  - SOT-25A N
  - SOT-89-5A P
- Output voltage
  - e.g.) 3.30V 33

Downloaded from Arrow.com.

Selection guide

Output Voltage	Accuracy	Parts No.				Dropout Voltage (Typ.) Io=300mA	Output Current	No-Load Input Current (Typ.)
		SOT-25A Package (3,000pcs/Reel)	SC-82ABB Package (3,000pcs/Reel)	PLP-4A Package (5,000pcs/Reel)	SOT89-5A Package (1,000pcs/Reel)			
1.0V	±20mV	MM3571A10NRE	MM3571A10URE	MM3571A10RRE	MM3571A10PRE	1.38V	300mA	25μA
1.1V	±20mV	MM3571A11NRE	MM3571A11URE	MM3571A11RRE	MM3571A11PRE	1.38V	300mA	25μA
1.2V	±20mV	MM3571A12NRE	MM3571A12URE	MM3571A12RRE	MM3571A12PRE	1.38V	300mA	25μA
1.3V	±20mV	MM3571A13NRE	MM3571A13URE	MM3571A13RRE	MM3571A13PRE	1.20V	300mA	25μA
1.4V	±20mV	MM3571A14NRE	MM3571A14URE	MM3571A14RRE	MM3571A14PRE	1.20V	300mA	25μA
1.5V	±20mV	MM3571A15NRE	MM3571A15URE	MM3571A15RRE	MM3571A15PRE	1.20V	300mA	25μA
1.6V	±20mV	MM3571A16NRE	MM3571A16URE	MM3571A16RRE	MM3571A16PRE	1.02V	300mA	25μA
1.7V	±20mV	MM3571A17NRE	MM3571A17URE	MM3571A17RRE	MM3571A17PRE	1.02V	300mA	25μA
1.8V	±20mV	MM3571A18NRE	MM3571A18URE	MM3571A18RRE	MM3571A18PRE	1.02V	300mA	25μA
1.9V	±20mV	MM3571A19NRE	MM3571A19URE	MM3571A19RRE	MM3571A19PRE	0.94V	300mA	25μA
2.0V	±1.0%	MM3571A20NRE	MM3571A20URE	MM3571A20RRE	MM3571A20PRE	0.94V	300mA	25μA
2.1V	±1.0%	MM3571A21NRE	MM3571A21URE	MM3571A21RRE	MM3571A21PRE	0.94V	300mA	25μA
2.2V	±1.0%	MM3571A22NRE	MM3571A22URE	MM3571A22RRE	MM3571A22PRE	0.94V	300mA	25μA
2.3V	±1.0%	MM3571A23NRE	MM3571A23URE	MM3571A23RRE	MM3571A23PRE	0.94V	300mA	25μA
2.4V	±1.0%	MM3571A24NRE	MM3571A24URE	MM3571A24RRE	MM3571A24PRE	0.94V	300mA	25μA
2.5V	±1.0%	MM3571A25NRE	MM3571A25URE	MM3571A25RRE	MM3571A25PRE	0.62V	300mA	25μA
2.6V	±1.0%	MM3571A26NRE	MM3571A26URE	MM3571A26RRE	MM3571A26PRE	0.62V	300mA	25μA
2.7V	±1.0%	MM3571A27NRE	MM3571A27URE	MM3571A27RRE	MM3571A27PRE	0.62V	300mA	25μA
2.8V	±1.0%	MM3571A28NRE	MM3571A28URE	MM3571A28RRE	MM3571A28PRE	0.62V	300mA	25μA
2.9V	±1.0%	MM3571A29NRE	MM3571A29URE	MM3571A29RRE	MM3571A29PRE	0.62V	300mA	25μA
3.0V	±1.0%	MM3571A30NRE	MM3571A30URE	MM3571A30RRE	MM3571A30PRE	0.62V	300mA	25μA
3.1V	±1.0%	MM3571A31NRE	MM3571A31URE	MM3571A31RRE	MM3571A31PRE	0.62V	300mA	25μA
3.2V	±1.0%	MM3571A32NRE	MM3571A32URE	MM3571A32RRE	MM3571A32PRE	0.62V	300mA	25μA
3.3V	±1.0%	MM3571A33NRE	MM3571A33URE	MM3571A33RRE	MM3571A33PRE	0.62V	300mA	25μA
3.4V	±1.0%	MM3571A34NRE	MM3571A34URE	MM3571A34RRE	MM3571A34PRE	0.62V	300mA	25μA
3.5V	±1.0%	MM3571A35NRE	MM3571A35URE	MM3571A35RRE	MM3571A35PRE	0.46V	300mA	25μA
3.6V	±1.0%	MM3571A36NRE	MM3571A36URE	MM3571A36RRE	MM3571A36PRE	0.46V	300mA	25μA
3.7V	±1.0%	MM3571A37NRE	MM3571A37URE	MM3571A37RRE	MM3571A37PRE	0.46V	300mA	25μA
3.8V	±1.0%	MM3571A38NRE	MM3571A38URE	MM3571A38RRE	MM3571A38PRE	0.46V	300mA	25μA
3.9V	±1.0%	MM3571A39NRE	MM3571A39URE	MM3571A39RRE	MM3571A39PRE	0.46V	300mA	25μA
4.0V	±1.0%	MM3571A40NRE	MM3571A40URE	MM3571A40RRE	MM3571A40PRE	0.46V	300mA	25μA
4.1V	±1.0%	MM3571A41NRE	MM3571A41URE	MM3571A41RRE	MM3571A41PRE	0.46V	300mA	25μA
4.2V	±1.0%	MM3571A42NRE	MM3571A42URE	MM3571A42RRE	MM3571A42PRE	0.46V	300mA	25μA
4.3V	±1.0%	MM3571A43NRE	MM3571A43URE	MM3571A43RRE	MM3571A43PRE	0.46V	300mA	25μA
4.4V	±1.0%	MM3571A44NRE	MM3571A44URE	MM3571A44RRE	MM3571A44PRE	0.46V	300mA	25μA
4.5V	±1.0%	MM3571A45NRE	MM3571A45URE	MM3571A45RRE	MM3571A45PRE	0.38V	300mA	25μA
4.6V	±1.0%	MM3571A46NRE	MM3571A46URE	MM3571A46RRE	MM3571A46PRE	0.38V	300mA	25μA
4.7V	±1.0%	MM3571A47NRE	MM3571A47URE	MM3571A47RRE	MM3571A47PRE	0.38V	300mA	25μA
4.8V	±1.0%	MM3571A48NRE	MM3571A48URE	MM3571A48RRE	MM3571A48PRE	0.38V	300mA	25μA
4.9V	±1.0%	MM3571A49NRE	MM3571A49URE	MM3571A49RRE	MM3571A49PRE	0.38V	300mA	25μA
5.0V	±1.0%	MM3571A50NRE	MM3571A50URE	MM3571A50RRE	MM3571A50PRE	0.38V	300mA	25μA

Downloaded from Arrow.com.

300mA LDO with thermal shutdown circuit IC

MM3608 Series

Outline

MM3608 is a 300mA LDO with thermal shut-down.
The overcurrent protection is included, It is prevented to destroy IC by sensing extraordinary thermal and shut-down output voltage.

Applications

(1) Flat-TV
(2) BD Player/ Recorders
(3) PCs
(4) Games

Features (Unless otherwise specified, Ta=+25°C)

(1) Input voltage range .....1.8V to 6.5V
(2) Output voltage range .....0.8V to 5.0V
(3) Output voltage accuracy.....VOUT±1% (VO≧2.0V)
(4) Maximum output current.....300mA
(5) Current consumption .....0.1μA typ. (OFF)
90μA typ. (No-Load)
(6) Dropout voltage.....0.24V typ. / 0.39V max.
(IO=300mV, Vo=3.0 to 5.0V)
(7) Line regulation.....0.02%/V typ.
/ 0.1%/V max.(Io=1mA)
(8) Load regulation .....10mV typ.
/ 60mV max.
(Io=1mA to 300mA)
(9) Vout Temperature coefficient .....±100ppm/ typ.
(10) TSD detect temperature.....150°C typ.
(11) TSD release temperature .....110°C typ.
(12) Output capacitor .....1μF (ceramic)

Pin assignment

SOT-25A

(Top view)

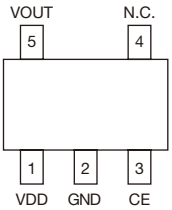

Model name structure

M M 3 6 0 8 □ □ □ □ R E

- Embossed taping E
- Housing R
- Package code
  - SOT-25A N
- Output voltage
  - 0.8V to 5.0V (0.1V step) 08 to 50
- Function type
  - CE=H-Active, with Discharge Function A

Downloaded from Arrow.com.

Selection guide

Output Voltage	Accuracy	Parts No. SOT-25A Package (3,000pcs/Reel)	Dropout Voltage (Typ.) Io=300mA	Output Current	No-Load Input Current (Typ.)
0.8V	±20mV	MM3608A08NRE	0.85V	300mA	90μA
0.9V	±20mV	MM3608A09NRE	0.85V	300mA	90μA
1.0V	±20mV	MM3608A10NRE	0.72V	300mA	90μA
1.1V	±20mV	MM3608A11NRE	0.72V	300mA	90μA
1.2V	±20mV	MM3608A12NRE	0.63V	300mA	90μA
1.3V	±20mV	MM3608A13NRE	0.63V	300mA	90μA
1.4V	±20mV	MM3608A14NRE	0.55V	300mA	90μA
1.5V	±20mV	MM3608A15NRE	0.55V	300mA	90μA
1.6V	±20mV	MM3608A16NRE	0.55V	300mA	90μA
1.7V	±20mV	MM3608A17NRE	0.50V	300mA	90μA
1.8V	±20mV	MM3608A18NRE	0.50V	300mA	90μA
1.9V	±20mV	MM3608A19NRE	0.50V	300mA	90μA
2.0V	±20mV	MM3608A20NRE	0.40V	300mA	90μA
2.1V	±1%	MM3608A21NRE	0.40V	300mA	90μA
2.2V	±1%	MM3608A22NRE	0.40V	300mA	90μA
2.3V	±1%	MM3608A23NRE	0.40V	300mA	90μA
2.4V	±1%	MM3608A24NRE	0.40V	300mA	90μA
2.5V	±1%	MM3608A25NRE	0.31V	300mA	90μA
2.6V	±1%	MM3608A26NRE	0.31V	300mA	90μA
2.7V	±1%	MM3608A27NRE	0.31V	300mA	90μA
2.8V	±1%	MM3608A28NRE	0.31V	300mA	90μA
2.9V	±1%	MM3608A29NRE	0.31V	300mA	90μA
3.0V	±1%	MM3608A30NRE	0.24V	300mA	90μA
3.1V	±1%	MM3608A31NRE	0.24V	300mA	90μA
3.2V	±1%	MM3608A32NRE	0.24V	300mA	90μA
3.3V	±1%	MM3608A33NRE	0.24V	300mA	90μA
3.4V	±1%	MM3608A34NRE	0.24V	300mA	90μA
3.5V	±1%	MM3608A35NRE	0.24V	300mA	90μA
3.6V	±1%	MM3608A36NRE	0.24V	300mA	90μA
3.7V	±1%	MM3608A37NRE	0.24V	300mA	90μA
3.8V	±1%	MM3608A38NRE	0.24V	300mA	90μA
3.9V	±1%	MM3608A39NRE	0.24V	300mA	90μA
4.0V	±1%	MM3608A40NRE	0.24V	300mA	90μA
4.1V	±1%	MM3608A41NRE	0.24V	300mA	90μA
4.2V	±1%	MM3608A42NRE	0.24V	300mA	90μA
4.3V	±1%	MM3608A43NRE	0.24V	300mA	90μA
4.4V	±1%	MM3608A44NRE	0.24V	300mA	90μA
4.5V	±1%	MM3608A45NRE	0.24V	300mA	90μA
4.6V	±1%	MM3608A46NRE	0.24V	300mA	90μA
4.7V	±1%	MM3608A47NRE	0.24V	300mA	90μA
4.8V	±1%	MM3608A48NRE	0.24V	300mA	90μA
4.9V	±1%	MM3608A49NRE	0.24V	300mA	90μA
5.0V	±1%	MM3608A50NRE	0.24V	300mA	90μA

Downloaded from Arrow.com.

300mA LDO with temperature sensor IC

MM3615 Series

Outline

MM3615 is a 300mA LDO with thermal shut-down/temperature sensor.
The temperature sensor monitor a junction temperature in MM3615. Therefore MM3615 can be shut down, or monitor an abnormal action by a data log.

Applications

(1) Flat-TV
(2) BD Player/ Recorders
(3) PCs
(4) Games

Features (Unless otherwise specified, Ta=+25°C)

(1) Input voltage range .....1.8V to 6.5V
(2) Output voltage range .....0.8V to 5.0V
(3) Output voltage accuracy.....VOUT±1% (VO≧2.0V)
(4) Maximum output current.....300mA
(5) Current consumption .....0.1μA typ. (OFF)
90μA typ. (No-Load)
(6) Dropout voltage.....0.24V typ. / 0.39V max.
(Io=300mV, Vo=3.0 to 5.0V)
(7) Line regulation.....0.02%/V typ. / 0.1%/V max.
(Io=1mA)
(8) Load regulation .....10mV typ./ 60mV max.
(Io=1mA~300mA)
(9) Vout Temperature coefficient .....±100ppm/°C typ.
(10) TSD detect temperature.....150°C typ.
(11) TSD release temperature .....110°C typ.
(12) Detective temperature output.....2.010V min./ 2.060V typ./ 2.110V max.
(Tj=25°C, VDD=3.0V)
(13) Detective temperature output.....1.585V min. / 1.650V typ./ 1.715V max.
(Tj=100°C, VDD=3.0V)
(14) Output capacitor .....1μF (ceramic)

Pin assignment

SOT-25A

(Top view)

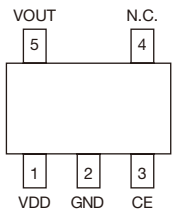

Model name structure

M M 3 6 1 5 □ □ □ □ R E

- Embossed taping E
- Housing R
- Package code
  - SOT-25A N
- Output voltage
  - 0.8V to 5.0V (0.1V step) 08 to 50
- Function type
  - CE=H-Active, with Discharge Function A

Downloaded from Arrow.com.

Selection guide

Output Voltage	Accuracy	Parts No. SOT-25A Package (3,000pcs/Reel) Temperature sensor linear output	Temperature sensor switch output	Dropout Voltage (Typ.) Io=300mA	Output Current	No-Load Input Current (Typ.)
0.8V	±20mV	MM3615A08NRE	MM3615B08NRE	0.85V	300mA	90μA
0.9V	±20mV	MM3615A09NRE	MM3615B09NRE	0.85V	300mA	90μA
1.0V	±20mV	MM3615A10NRE	MM3615B10NRE	0.72V	300mA	90μA
1.1V	±20mV	MM3615A11NRE	MM3615B11NRE	0.72V	300mA	90μA
1.2V	±20mV	MM3615A12NRE	MM3615B12NRE	0.63V	300mA	90μA
1.3V	±20mV	MM3615A13NRE	MM3615B13NRE	0.63V	300mA	90μA
1.4V	±20mV	MM3615A14NRE	MM3615B14NRE	0.55V	300mA	90μA
1.5V	±20mV	MM3615A15NRE	MM3615B15NRE	0.55V	300mA	90μA
1.6V	±20mV	MM3615A16NRE	MM3615B16NRE	0.55V	300mA	90μA
1.7V	±20mV	MM3615A17NRE	MM3615B17NRE	0.50V	300mA	90μA
1.8V	±20mV	MM3615A18NRE	MM3615B18NRE	0.50V	300mA	90μA
1.9V	±20mV	MM3615A19NRE	MM3615B19NRE	0.50V	300mA	90μA
2.0V	±20mV	MM3615A20NRE	MM3615B20NRE	0.40V	300mA	90μA
2.1V	±1%	MM3615A21NRE	MM3615B21NRE	0.40V	300mA	90μA
2.2V	±1%	MM3615A22NRE	MM3615B22NRE	0.40V	300mA	90μA
2.3V	±1%	MM3615A23NRE	MM3615B23NRE	0.40V	300mA	90μA
2.4V	±1%	MM3615A24NRE	MM3615B24NRE	0.40V	300mA	90μA
2.5V	±1%	MM3615A25NRE	MM3615B25NRE	0.31V	300mA	90μA
2.6V	±1%	MM3615A26NRE	MM3615B26NRE	0.31V	300mA	90μA
2.7V	±1%	MM3615A27NRE	MM3615B27NRE	0.31V	300mA	90μA
2.8V	±1%	MM3615A28NRE	MM3615B28NRE	0.31V	300mA	90μA
2.9V	±1%	MM3615A29NRE	MM3615B29NRE	0.31V	300mA	90μA
3.0V	±1%	MM3615A30NRE	MM3615B30NRE	0.24V	300mA	90μA
3.1V	±1%	MM3615A31NRE	MM3615B31NRE	0.24V	300mA	90μA
3.2V	±1%	MM3615A32NRE	MM3615B32NRE	0.24V	300mA	90μA
3.3V	±1%	MM3615A33NRE	MM3615B33NRE	0.24V	300mA	90μA
3.4V	±1%	MM3615A34NRE	MM3615B34NRE	0.24V	300mA	90μA
3.5V	±1%	MM3615A35NRE	MM3615B35NRE	0.24V	300mA	90μA
3.6V	±1%	MM3615A36NRE	MM3615B36NRE	0.24V	300mA	90μA
3.7V	±1%	MM3615A37NRE	MM3615B37NRE	0.24V	300mA	90μA
3.8V	±1%	MM3615A38NRE	MM3615B38NRE	0.24V	300mA	90μA
3.9V	±1%	MM3615A39NRE	MM3615B39NRE	0.24V	300mA	90μA
4.0V	±1%	MM3615A40NRE	MM3615B40NRE	0.24V	300mA	90μA
4.1V	±1%	MM3615A41NRE	MM3615B41NRE	0.24V	300mA	90μA
4.2V	±1%	MM3615A42NRE	MM3615B42NRE	0.24V	300mA	90μA
4.3V	±1%	MM3615A43NRE	MM3615B43NRE	0.24V	300mA	90μA
4.4V	±1%	MM3615A44NRE	MM3615B44NRE	0.24V	300mA	90μA
4.5V	±1%	MM3615A45NRE	MM3615B45NRE	0.24V	300mA	90μA
4.6V	±1%	MM3615A46NRE	MM3615B46NRE	0.24V	300mA	90μA
4.7V	±1%	MM3615A47NRE	MM3615B47NRE	0.24V	300mA	90μA
4.8V	±1%	MM3615A48NRE	MM3615B48NRE	0.24V	300mA	90μA
4.9V	±1%	MM3615A49NRE	MM3615B49NRE	0.24V	300mA	90μA
5.0V	±1%	MM3615A50NRE	MM3615B50NRE	0.24V	300mA	90μA

Downloaded from Arrow.com.

2 POWER SUPPLY ICs

15V withstand voltage 300mA regulator IC

MM1886 Series

Outline

This IC is a 250mA / 300mA Low dropout regulator IC with ON / OFF control.
Since the IC has a high ripple rejection characteristic of 70dB / 1kHz, it enables the use in a wide range of input voltage. Therefore, it permits the use under the circumstances of various power supplies.
The IC applies to a standard home equipments, for a maximum operating voltage is 14V.

Applications

(1) Flat TVs
(2) DVD/Blu-ray recorders
(3) Printers, multifunction machines
(4) Game equipments

Features (Unless otherwise specified, Ta=+25°C)

(1) Input voltage range .....1.8V to 14.0V
(2) Output voltage range .....1.5V to 5.0V
(3) Output voltage accuracy.....VOUT±2.0%
(4) Maximum output current.....250mA (VOUT=1.5V to 2.9V)
300mA (VOUT=3.0V to 5.0V)
(5) Current consumption .....75μA typ.
(No-Load Input Current)
0.0μA typ. (OFF)
(6) Output capacitor 1μF
(7) Dropout voltage.....0.40V typ. (Io=250mA)
0.45V typ. (Io=300mA)
(8) Line regulation.....0.1% / V typ.
(9) Load regulation .....18mV typ. (Io=1mA to 250mA)
20mV typ. (Io=1mA to 300mA)
(10) Ripple rejection .....70dB typ. (f=1kHz)

Pin assignment

■ SOT-25A

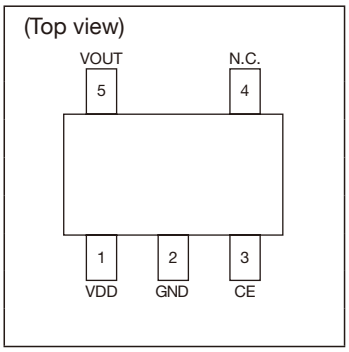

■ SOT89-5A

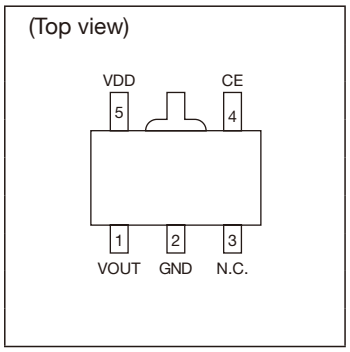

Model name structure

M M 1 8 8 6 A □ □ □ R E

- Embossed taping — E
- Housing — R
- Package code
  - SOT-25A — N
  - SOT-89-5A — P
- Output voltage
  - e.g.) 3.3V — 33

Downloaded from Arrow.com.

Selection guide

Output Voltage	Accuracy	Parts No.		Dropout Voltage (Typ.) Io=300mA	Output Current	No-Load Input Current (Typ.)
		SOT-25A Package (3,000pcs/Reel)	SOT89-5A Package (1,000pcs/Reel)			
1.5V	±2.0%	MM1886A15NRE	MM1886A15PRE	0.53V	300mA	0.9μA
1.6V	±2.0%	MM1886A16NRE	MM1886A16PRE	0.53V	300mA	0.9μA
1.7V	±2.0%	MM1886A17NRE	MM1886A17PRE	0.44V	300mA	0.9μA
1.8V	±2.0%	MM1886A18NRE	MM1886A18PRE	0.44V	300mA	0.9μA
1.9V	±2.0%	MM1886A19NRE	MM1886A19PRE	0.44V	300mA	0.9μA
2.0V	±2.0%	MM1886A20NRE	MM1886A20PRE	0.34V	300mA	0.9μA
2.1V	±2.0%	MM1886A21NRE	MM1886A21PRE	0.34V	300mA	0.9μA
2.2V	±2.0%	MM1886A22NRE	MM1886A22PRE	0.34V	300mA	0.9μA
2.3V	±2.0%	MM1886A23NRE	MM1886A23PRE	0.34V	300mA	0.9μA
2.4V	±2.0%	MM1886A24NRE	MM1886A24PRE	0.34V	300mA	0.9μA
2.5V	±2.0%	MM1886A25NRE	MM1886A25PRE	0.28V	300mA	0.9μA
2.6V	±2.0%	MM1886A26NRE	MM1886A26PRE	0.28V	300mA	0.9μA
2.7V	±2.0%	MM1886A27NRE	MM1886A27PRE	0.28V	300mA	0.9μA
2.8V	±2.0%	MM1886A28NRE	MM1886A28PRE	0.24V	300mA	0.9μA
2.9V	±2.0%	MM1886A29NRE	MM1886A29PRE	0.24V	300mA	0.9μA
3.0V	±2.0%	MM1886A30NRE	MM1886A30PRE	0.24V	300mA	0.9μA
3.1V	±2.0%	MM1886A31NRE	MM1886A31PRE	0.24V	300mA	0.9μA
3.2V	±2.0%	MM1886A32NRE	MM1886A32PRE	0.24V	300mA	0.9μA
3.3V	±2.0%	MM1886A33NRE	MM1886A33PRE	0.24V	300mA	0.9μA
3.4V	±2.0%	MM1886A34NRE	MM1886A34PRE	0.24V	300mA	1.2μA
3.5V	±2.0%	MM1886A35NRE	MM1886A35PRE	0.24V	300mA	1.2μA
3.6V	±2.0%	MM1886A36NRE	MM1886A36PRE	0.24V	300mA	1.2μA
3.7V	±2.0%	MM1886A37NRE	MM1886A37PRE	0.24V	300mA	1.2μA
3.8V	±2.0%	MM1886A38NRE	MM1886A38PRE	0.24V	300mA	1.2μA
3.9V	±2.0%	MM1886A39NRE	MM1886A39PRE	0.24V	300mA	1.2μA
4.0V	±2.0%	MM1886A40NRE	MM1886A40PRE	0.24V	300mA	1.2μA
4.1V	±2.0%	MM1886A41NRE	MM1886A41PRE	0.24V	300mA	1.2μA
4.2V	±2.0%	MM1886A42NRE	MM1886A42PRE	0.24V	300mA	1.2μA
4.3V	±2.0%	MM1886A43NRE	MM1886A43PRE	0.24V	300mA	1.2μA
4.4V	±2.0%	MM1886A44NRE	MM1886A44PRE	0.24V	300mA	1.2μA
4.5V	±2.0%	MM1886A45NRE	MM1886A45PRE	0.24V	300mA	1.2μA
4.6V	±2.0%	MM1886A46NRE	MM1886A46PRE	0.24V	300mA	1.2μA
4.7V	±2.0%	MM1886A47NRE	MM1886A47PRE	0.24V	300mA	1.2μA
4.8V	±2.0%	MM1886A48NRE	MM1886A48PRE	0.24V	300mA	1.2μA
4.9V	±2.0%	MM1886A49NRE	MM1886A49PRE	0.24V	300mA	1.2μA
5.0V	±2.0%	MM1886A50NRE	MM1886A50PRE	0.24V	300mA	1.2μA

Downloaded from Arrow.com.

2 POWER SUPPLY ICs

500mA regulator IC with the soft-start

MM3526, MM3478 Series

Outline

This IC is a 500mA LDO with soft-start.
The soft-start can reduce rush current by the Cs capacitor at start-up.
The Package is SOT89-5A which can be the high radiation of heat on small space.

Applications

(1) Flat TVs
(2) DVD/Blu-ray recorders
(3) Printers, multifunction machines
(4) Game equipments

Features (Unless otherwise specified, Ta=+25°C)

(1) Input voltage range .....1.6V to 6.0V
(2) Output voltage range .....1.2V to 5.0V
(3) Output voltage accuracy.....VOUT±15mV (VOUT<1.5V)
VOUT±1.0% (VOUT≧1.5V)
(4) Maximum output current.....500mA
(5) Current consumption .....50μA typ.
(No-Load Input Current)
0.1μA typ. (OFF)
(6) Output capacitor 1μF
(7) Dropout voltage.....0.25V typ.
(VOUT=3.0V, Io=500mA)
(8) Output short-circuit current 30mA typ.
(9) Line regulation.....0.05% / V typ.
(10) Load regulation .....40mV typ. (Io=1mA to 500mA)
(11) Ripple rejection .....70dB typ. (f=1kHz)

Pin assignment

■ SOT-25A

(Top view)

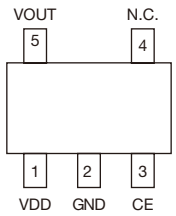

MM3526

■ SOT89-5A

(Top view)

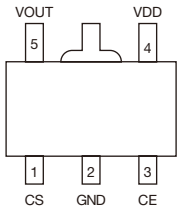

MM3526

■ SOT89-5A

(Top view)

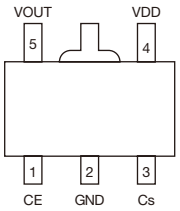

MM3478

■ SSON-6A

(Top view)

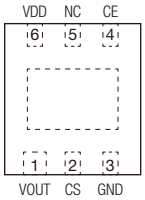

MM3526

Model name structure

M M 3 5 2 6 A □ □ □ R E
M M 3 4 7 8 A □ □ □ R E

Embossed taping	E
Housing	R
Package code	
SOT-25A	N
SOT-89-5A	P
SSON-6A	R
Output voltage	
e.g.) 3.3V	33

Downloaded from Arrow.com.

Selection guide

Output Voltage	Accuracy	Parts No.				Dropout Voltage (Typ.) Io=500mA	Output Current	No-Load Input Current (Typ.)
		MM3526 Series			MM3478 Series			
		SOT-25A Package (3,000pcs/Reel)	SOT89-5A Package (1,000pcs/Reel)	SSON-6E Package (3,000pcs/Reel)	SOT89-5A Package (1,000pcs/Reel)			
1.2V	±15mV	MM3526A12NRE	MM3526A12PRE	MM3526A12RRE	MM3478A12PRE	1.00V	500mA	50μA
1.3V	±15mV	MM3526A13NRE	MM3526A13PRE	MM3526A13RRE	MM3478A13PRE	1.00V	500mA	50μA
1.4V	±15mV	MM3526A14NRE	MM3526A14PRE	MM3526A14RRE	MM3478A14PRE	1.00V	500mA	50μA
1.5V	±1.0%	MM3526A15NRE	MM3526A15PRE	MM3526A15RRE	MM3478A15PRE	0.35V	500mA	50μA
1.6V	±1.0%	MM3526A16NRE	MM3526A16PRE	MM3526A16RRE	MM3478A16PRE	0.35V	500mA	50μA
1.7V	±1.0%	MM3526A17NRE	MM3526A17PRE	MM3526A17RRE	MM3478A17PRE	0.35V	500mA	50μA
1.8V	±1.0%	MM3526A18NRE	MM3526A18PRE	MM3526A18RRE	MM3478A18PRE	0.35V	500mA	50μA
1.9V	±1.0%	MM3526A19NRE	MM3526A19PRE	MM3526A19RRE	MM3478A19PRE	0.35V	500mA	50μA
2.0V	±1.0%	MM3526A20NRE	MM3526A20PRE	MM3526A20RRE	MM3478A20PRE	0.35V	500mA	50μA
2.1V	±1.0%	MM3526A21NRE	MM3526A21PRE	MM3526A21RRE	MM3478A21PRE	0.35V	500mA	50μA
2.2V	±1.0%	MM3526A22NRE	MM3526A22PRE	MM3526A22RRE	MM3478A22PRE	0.35V	500mA	50μA
2.3V	±1.0%	MM3526A23NRE	MM3526A23PRE	MM3526A23RRE	MM3478A23PRE	0.35V	500mA	50μA
2.4V	±1.0%	MM3526A24NRE	MM3526A24PRE	MM3526A24RRE	MM3478A24PRE	0.35V	500mA	50μA
2.5V	±1.0%	MM3526A25NRE	MM3526A25PRE	MM3526A25RRE	MM3478A25PRE	0.35V	500mA	50μA
2.6V	±1.0%	MM3526A26NRE	MM3526A26PRE	MM3526A26RRE	MM3478A26PRE	0.35V	500mA	50μA
2.7V	±1.0%	MM3526A27NRE	MM3526A27PRE	MM3526A27RRE	MM3478A27PRE	0.25V	500mA	50μA
2.8V	±1.0%	MM3526A28NRE	MM3526A28PRE	MM3526A28RRE	MM3478A28PRE	0.25V	500mA	50μA
2.9V	±1.0%	MM3526A29NRE	MM3526A29PRE	MM3526A29RRE	MM3478A29PRE	0.25V	500mA	50μA
3.0V	±1.0%	MM3526A30NRE	MM3526A30PRE	MM3526A30RRE	MM3478A30PRE	0.25V	500mA	50μA
3.1V	±1.0%	MM3526A31NRE	MM3526A31PRE	MM3526A31RRE	MM3478A31PRE	0.25V	500mA	50μA
3.2V	±1.0%	MM3526A32NRE	MM3526A32PRE	MM3526A32RRE	MM3478A32PRE	0.25V	500mA	50μA
3.3V	±1.0%	MM3526A33NRE	MM3526A33PRE	MM3526A33RRE	MM3478A33PRE	0.25V	500mA	50μA
3.4V	±1.0%	MM3526A34NRE	MM3526A34PRE	MM3526A34RRE	MM3478A34PRE	0.25V	500mA	50μA
3.5V	±1.0%	MM3526A35NRE	MM3526A35PRE	MM3526A35RRE	MM3478A35PRE	0.25V	500mA	50μA
3.6V	±1.0%	MM3526A36NRE	MM3526A36PRE	MM3526A36RRE	MM3478A36PRE	0.25V	500mA	50μA
3.7V	±1.0%	MM3526A37NRE	MM3526A37PRE	MM3526A37RRE	MM3478A37PRE	0.25V	500mA	50μA
3.8V	±1.0%	MM3526A38NRE	MM3526A38PRE	MM3526A38RRE	MM3478A38PRE	0.25V	500mA	50μA
3.9V	±1.0%	MM3526A39NRE	MM3526A39PRE	MM3526A39RRE	MM3478A39PRE	0.25V	500mA	50μA
4.0V	±1.0%	MM3526A40NRE	MM3526A40PRE	MM3526A40RRE	MM3478A40PRE	0.25V	500mA	50μA
4.1V	±1.0%	MM3526A41NRE	MM3526A41PRE	MM3526A41RRE	MM3478A41PRE	0.25V	500mA	50μA
4.2V	±1.0%	MM3526A42NRE	MM3526A42PRE	MM3526A42RRE	MM3478A42PRE	0.25V	500mA	50μA
4.3V	±1.0%	MM3526A43NRE	MM3526A43PRE	MM3526A43RRE	MM3478A43PRE	0.25V	500mA	50μA
4.4V	±1.0%	MM3526A44NRE	MM3526A44PRE	MM3526A44RRE	MM3478A44PRE	0.25V	500mA	50μA
4.5V	±1.0%	MM3526A45NRE	MM3526A45PRE	MM3526A45RRE	MM3478A45PRE	0.25V	500mA	50μA
4.6V	±1.0%	MM3526A46NRE	MM3526A46PRE	MM3526A46RRE	MM3478A46PRE	0.25V	500mA	50μA
4.7V	±1.0%	MM3526A47NRE	MM3526A47PRE	MM3526A47RRE	MM3478A47PRE	0.25V	500mA	50μA
4.8V	±1.0%	MM3526A48NRE	MM3526A48PRE	MM3526A48RRE	MM3478A48PRE	0.25V	500mA	50μA
4.9V	±1.0%	MM3526A49NRE	MM3526A49PRE	MM3526A49RRE	MM3478A49PRE	0.25V	500mA	50μA
5.0V	±1.0%	MM3526A50NRE	MM3526A50PRE	MM3526A50RRE	MM3478A50PRE	0.25V	500mA	50μA

Downloaded from Arrow.com.

1000mA regulator

MM1866 Series

Outline

This IC is 1000mA maximum output current regulator IC.
Output voltage accuracy ± 2%, dropout voltage 0.2V typ. (Io = 500mA) with the characteristics of a small regulator.
The output noise reduction pin and the output ON / OFF control pin has.
This regulator is ideal for stationary equipment to reduce standby power consumption.

Applications

(1) Flat TVs
(2) DVD/Blu-ray players
(3) DVD/Blu-ray recorders
(4) Portable games

Features (Unless otherwise specified, Ta=+25°C)

(1) Input voltage range .....2.0V to 10.0V
(2) Output voltage range .....1.5V to 5.0V
(3) Output voltage accuracy.....VOUT±2%
(4) Output current.....1000mA
(5) Current consumption .....2.5mA typ.
(No-Load Input Current)
(6) Output capacitor 1µF
(7) Dropout voltage.....0.2V typ.
(Io=500mA)
(8) Line regulation.....10mV typ.
(9) Load regulation .....20mV typ.
(Io=0 to 1000mA)
(10) Ripple rejection .....65dB typ. (f=120kHz)

Pin assignment

■ HSOP-8A

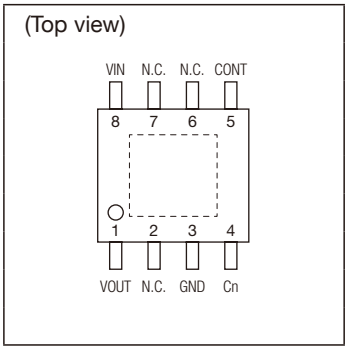

■ TO-252C

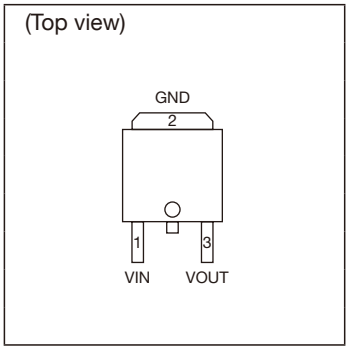

Model name structure

M M 1 8 6 6 A □ □ □ □ E

Embossed taping	E
Housing	
HSOP-8A	B
TO-252C	R
Package code	
HSOP-8A	H
TO-252C	T
Output voltage	
e.g.) 3.0V	30
3.5V	35

Downloaded from Arrow.com.

Selection guide

Output Voltage	Accuracy	Parts No.		Dropout Voltage (Typ.) Io=500mA	Output Current	No-Load Input Current (Typ.)
		HSOP-8A Package (2,000pcs/Reel)	TO-252C Package (3,000pcs/Reel)			
1.5V	±2%	MM1866A15HBE	MM1866A15TRE	0.2V	1000mA	2.5mA
1.6V	±2%	MM1866A16HBE	MM1866A16TRE	0.2V	1000mA	2.5mA
1.7V	±2%	MM1866A17HBE	MM1866A17TRE	0.2V	1000mA	2.5mA
1.8V	±2%	MM1866A18HBE	MM1866A18TRE	0.2V	1000mA	2.5mA
1.9V	±2%	MM1866A19HBE	MM1866A19TRE	0.2V	1000mA	2.5mA
2.0V	±2%	MM1866A20HBE	MM1866A20TRE	0.2V	1000mA	2.5mA
2.1V	±2%	MM1866A21HBE	MM1866A21TRE	0.2V	1000mA	2.5mA
2.2V	±2%	MM1866A22HBE	MM1866A22TRE	0.2V	1000mA	2.5mA
2.3V	±2%	MM1866A23HBE	MM1866A23TRE	0.2V	1000mA	2.5mA
2.4V	±2%	MM1866A24HBE	MM1866A24TRE	0.2V	1000mA	2.5mA
2.5V	±2%	MM1866A25HBE	MM1866A25TRE	0.2V	1000mA	2.5mA
2.6V	±2%	MM1866A26HBE	MM1866A26TRE	0.2V	1000mA	2.5mA
2.7V	±2%	MM1866A27HBE	MM1866A27TRE	0.2V	1000mA	2.5mA
2.8V	±2%	MM1866A28HBE	MM1866A28TRE	0.2V	1000mA	2.5mA
2.9V	±2%	MM1866A29HBE	MM1866A29TRE	0.2V	1000mA	2.5mA
3.0V	±2%	MM1866A30HBE	MM1866A30TRE	0.2V	1000mA	2.5mA
3.1V	±2%	MM1866A31HBE	MM1866A31TRE	0.2V	1000mA	2.5mA
3.2V	±2%	MM1866A32HBE	MM1866A32TRE	0.2V	1000mA	2.5mA
3.3V	±2%	MM1866A33HBE	MM1866A33TRE	0.2V	1000mA	2.5mA
3.4V	±2%	MM1866A34HBE	MM1866A34TRE	0.2V	1000mA	2.5mA
3.5V	±2%	MM1866A35HBE	MM1866A35TRE	0.2V	1000mA	2.5mA
3.6V	±2%	MM1866A36HBE	MM1866A36TRE	0.2V	1000mA	2.5mA
3.7V	±2%	MM1866A37HBE	MM1866A37TRE	0.2V	1000mA	2.5mA
3.8V	±2%	MM1866A38HBE	MM1866A38TRE	0.2V	1000mA	2.5mA
3.9V	±2%	MM1866A39HBE	MM1866A39TRE	0.2V	1000mA	2.5mA
4.0V	±2%	MM1866A40HBE	MM1866A40TRE	0.2V	1000mA	2.5mA
4.1V	±2%	MM1866A41HBE	MM1866A41TRE	0.2V	1000mA	2.5mA
4.2V	±2%	MM1866A42HBE	MM1866A42TRE	0.2V	1000mA	2.5mA
4.3V	±2%	MM1866A43HBE	MM1866A43TRE	0.2V	1000mA	2.5mA
4.4V	±2%	MM1866A44HBE	MM1866A44TRE	0.2V	1000mA	2.5mA
4.5V	±2%	MM1866A45HBE	MM1866A45TRE	0.2V	1000mA	2.5mA
4.6V	±2%	MM1866A46HBE	MM1866A46TRE	0.2V	1000mA	2.5mA
4.7V	±2%	MM1866A47HBE	MM1866A47TRE	0.2V	1000mA	2.5mA
4.8V	±2%	MM1866A48HBE	MM1866A48TRE	0.2V	1000mA	2.5mA
4.9V	±2%	MM1866A49HBE	MM1866A49TRE	0.2V	1000mA	2.5mA
5.0V	±2%	MM1866A50HBE	MM1866A50TRE	0.2V	1000mA	2.5mA

Downloaded from Arrow.com.

2 POWER SUPPLY ICs

1000mA regulator IC with the soft-start

MM3529, MM3479 Series

Outline

This IC is a 1000mA LDO with soft-start.
The soft-start can reduce rush current by the Cs capacitor at start-up.
The Package is SOT89-5A which can be the high radiation of heat on small space.

Applications

(1) Flat TVs
(2) DVD/Blu-ray recorders
(3) Printers, multifunction machines
(4) Game equipments

Features (Unless otherwise specified, Ta=+25°C)

(1) Input voltage range .....1.6V to 6.0V
(2) Output voltage range .....1.2V to 5.0V
(3) Output voltage accuracy.....VOUT±15mV (VOUT<1.5V)
VOUT±1.0% (VOUT≧1.5V)
(4) Maximum output current.....1000mA
(5) Current consumption .....50μA typ.
(No-Load Input Current)
0.1μA typ. (OFF)
(6) Output capacitor 1μF
(7) Dropout voltage.....0.50V typ.
(VOUT=3.0V, Io=1000mA)
(8) Output short-circuit current....30mA typ.
(9) Line regulation.....0.05% / V typ.
(10) Load regulation .....75mV typ.
(Io=1mA to 1000mA)
(11) Ripple rejection .....70dB typ. (f=1kHz)

Pin assignment

■ SOT89-5A

(Top view)

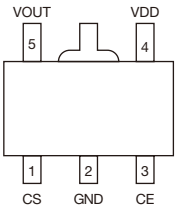

MM3529

■ SOT89-5A

(Top view)

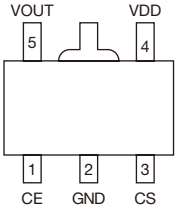

MM3479

■ SSON-6A

(Top view)

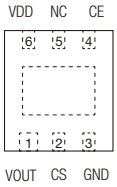

MM3529

Model name structure

M M 3 5 2 9 A □ □ □ R E
M M 3 4 7 9 A □ □ □ R E

Embossed taping	E	
Housing	R	
Package code		
SOT89-5A	P	MM3529, MM3479
SSON-6A	R	MM3529
Output voltage		
e.g.) 3.3V	33	

Downloaded from Arrow.com.

Selection guide

Output Voltage	Accuracy	Parts No.			Dropout Voltage (Typ.) Io=1,000mA	Output Current	No-Load Input Current (Typ.)
		MM3529 Series		MM3479 Series			
		SOT89-5A Package (1,000pcs/Reel)	SSON-6A Package (3,000pcs/Reel)	SOT89-5A Package (1,000pcs/Reel)			
1.2V	±15mV	MM3529A12PRE	MM3529A12RRE	MM3479A12PRE	1.00V	1000mA	50μA
1.3V	±15mV	MM3529A13PRE	MM3529A13RRE	MM3479A13PRE	1.00V	1000mA	50μA
1.4V	±15mV	MM3529A14PRE	MM3529A14RRE	MM3479A14PRE	1.00V	1000mA	50μA
1.5V	±1.0%	MM3529A15PRE	MM3529A15RRE	MM3479A15PRE	0.70V	1000mA	50μA
1.6V	±1.0%	MM3529A16PRE	MM3529A16RRE	MM3479A16PRE	0.70V	1000mA	50μA
1.7V	±1.0%	MM3529A17PRE	MM3529A17RRE	MM3479A17PRE	0.70V	1000mA	50μA
1.8V	±1.0%	MM3529A18PRE	MM3529A18RRE	MM3479A18PRE	0.70V	1000mA	50μA
1.9V	±1.0%	MM3529A19PRE	MM3529A19RRE	MM3479A19PRE	0.70V	1000mA	50μA
2.0V	±1.0%	MM3529A20PRE	MM3529A20RRE	MM3479A20PRE	0.70V	1000mA	50μA
2.1V	±1.0%	MM3529A21PRE	MM3529A21RRE	MM3479A21PRE	0.70V	1000mA	50μA
2.2V	±1.0%	MM3529A22PRE	MM3529A22RRE	MM3479A22PRE	0.70V	1000mA	50μA
2.3V	±1.0%	MM3529A23PRE	MM3529A23RRE	MM3479A23PRE	0.70V	1000mA	50μA
2.4V	±1.0%	MM3529A24PRE	MM3529A24RRE	MM3479A24PRE	0.70V	1000mA	50μA
2.5V	±1.0%	MM3529A25PRE	MM3529A25RRE	MM3479A25PRE	0.70V	1000mA	50μA
2.6V	±1.0%	MM3529A26PRE	MM3529A26RRE	MM3479A26PRE	0.70V	1000mA	50μA
2.7V	±1.0%	MM3529A27PRE	MM3529A27RRE	MM3479A27PRE	0.50V	1000mA	50μA
2.8V	±1.0%	MM3529A28PRE	MM3529A28RRE	MM3479A28PRE	0.50V	1000mA	50μA
2.9V	±1.0%	MM3529A29PRE	MM3529A29RRE	MM3479A29PRE	0.50V	1000mA	50μA
3.0V	±1.0%	MM3529A30PRE	MM3529A30RRE	MM3479A30PRE	0.50V	1000mA	50μA
3.1V	±1.0%	MM3529A31PRE	MM3529A31RRE	MM3479A31PRE	0.50V	1000mA	50μA
3.2V	±1.0%	MM3529A32PRE	MM3529A32RRE	MM3479A32PRE	0.50V	1000mA	50μA
3.3V	±1.0%	MM3529A33PRE	MM3529A33RRE	MM3479A33PRE	0.50V	1000mA	50μA
3.4V	±1.0%	MM3529A34PRE	MM3529A34RRE	MM3479A34PRE	0.50V	1000mA	50μA
3.5V	±1.0%	MM3529A35PRE	MM3529A35RRE	MM3479A35PRE	0.50V	1000mA	50μA
3.6V	±1.0%	MM3529A36PRE	MM3529A36RRE	MM3479A36PRE	0.50V	1000mA	50μA
3.7V	±1.0%	MM3529A37PRE	MM3529A37RRE	MM3479A37PRE	0.50V	1000mA	50μA
3.8V	±1.0%	MM3529A38PRE	MM3529A38RRE	MM3479A38PRE	0.50V	1000mA	50μA
3.9V	±1.0%	MM3529A39PRE	MM3529A39RRE	MM3479A39PRE	0.50V	1000mA	50μA
4.0V	±1.0%	MM3529A40PRE	MM3529A40RRE	MM3479A40PRE	0.50V	1000mA	50μA
4.1V	±1.0%	MM3529A41PRE	MM3529A41RRE	MM3479A41PRE	0.50V	1000mA	50μA
4.2V	±1.0%	MM3529A42PRE	MM3529A42RRE	MM3479A42PRE	0.50V	1000mA	50μA
4.3V	±1.0%	MM3529A43PRE	MM3529A43RRE	MM3479A43PRE	0.50V	1000mA	50μA
4.4V	±1.0%	MM3529A44PRE	MM3529A44RRE	MM3479A44PRE	0.50V	1000mA	50μA
4.5V	±1.0%	MM3529A45PRE	MM3529A45RRE	MM3479A45PRE	0.50V	1000mA	50μA
4.6V	±1.0%	MM3529A46PRE	MM3529A46RRE	MM3479A46PRE	0.50V	1000mA	50μA
4.7V	±1.0%	MM3529A47PRE	MM3529A47RRE	MM3479A47PRE	0.50V	1000mA	50μA
4.8V	±1.0%	MM3529A48PRE	MM3529A48RRE	MM3479A48PRE	0.50V	1000mA	50μA
4.9V	±1.0%	MM3529A49PRE	MM3529A49RRE	MM3479A49PRE	0.50V	1000mA	50μA
5.0V	±1.0%	MM3529A50PRE	MM3529A50RRE	MM3479A50PRE	0.50V	1000mA	50μA

Downloaded from Arrow.com.

Low-saturation voltage 1.5A LDO

MM1870 Series

Outline

This IC is a 1.5A LDO with a low saturation voltage.
In addition to a low-saturation voltage (0.26V typ., Io=1.5 A), the device has a low voltage output with a minimum of 0.9 V, and is therefore capable of low-voltage operation.
This device is offered in the PKG TO-252-5A package featuring high heat dissipation and the small-sized PKG HSOP-8A package.
For protection, it includes an over-current protection circuit and a thermal shutdown circuit.

Applications

(1) Flat TVs
(2) DVD/Blu-ray recorders
(3) Set top boxes

Features (Unless otherwise specified, Ta=+25°C)

(1) Input voltage range .....1.25V to 10V
(2) Output voltage range .....0.9V to 5.0V
(3) Output voltage accuracy.....VOUT±2%
(4) Output current.....1.5A
(5) Current consumption .....1mA typ.
(No-Load Input Current)
(6) Output capacitor 1μF
(7) Dropout voltage.....0.26V typ. (Io=1500mA)
(8) Line regulation.....10mV typ. ,20mV max.
(Io=1mA)
(9) Load regulation .....19mV typ. ,50mV max.
(Io=1mA to 1500mA)
(10) Ripple rejection .....65dB typ. (f=1kHz)

Pin assignment

■ HSOP-8A

(Top view)

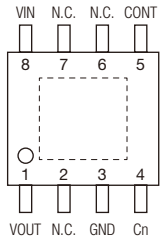

■ TO-252-5A

(Top view)

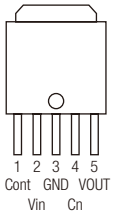

Model name structure

M M 1 8 7 0 A □ □ □ □ E

Embossed taping	E
Housing	
HSOP-8A	B
TO-252-5A	R
Package code	
HSOP-8A	H
TO-252-5A	T
Output voltage	
e.g.) 3.0V	30
3.5V	35

Downloaded from Arrow.com.

Selection guide

Output Voltage	Accuracy	Parts No.		Dropout Voltage (Typ.) Io=1,500mA	Output Current	No-Load Input Current (Typ.)
		HSOP-8A Package (2,000pcs/Reel)	TO-252-5A Package (3,000pcs/Reel)			
0.9V	±30mV	MM1870A09HBE	MM1870A09TRE	*	1500mA	1mA
1.0V	±30mV	MM1870A10HBE	MM1870A10TRE	*	1500mA	1mA
1.1V	±30mV	MM1870A11HBE	MM1870A11TRE	0.26V	1500mA	1mA
1.2V	±30mV	MM1870A12HBE	MM1870A12TRE	0.26V	1500mA	1mA
1.3V	±30mV	MM1870A13HBE	MM1870A13TRE	0.26V	1500mA	1mA
1.4V	±30mV	MM1870A14HBE	MM1870A14TRE	0.26V	1500mA	1mA
1.5V	±2%	MM1870A15HBE	MM1870A15TRE	0.26V	1500mA	1mA
1.6V	±2%	MM1870A16HBE	MM1870A16TRE	0.26V	1500mA	1mA
1.7V	±2%	MM1870A17HBE	MM1870A17TRE	0.26V	1500mA	1mA
1.8V	±2%	MM1870A18HBE	MM1870A18TRE	0.26V	1500mA	1mA
1.9V	±2%	MM1870A19HBE	MM1870A19TRE	0.26V	1500mA	1mA
2.0V	±2%	MM1870A20HBE	MM1870A20TRE	0.26V	1500mA	1mA
2.1V	±2%	MM1870A21HBE	MM1870A21TRE	0.26V	1500mA	1mA
2.2V	±2%	MM1870A22HBE	MM1870A22TRE	0.26V	1500mA	1mA
2.3V	±2%	MM1870A23HBE	MM1870A23TRE	0.26V	1500mA	1mA
2.4V	±2%	MM1870A24HBE	MM1870A24TRE	0.26V	1500mA	1mA
2.5V	±2%	MM1870A25HBE	MM1870A25TRE	0.26V	1500mA	1mA
2.6V	±2%	MM1870A26HBE	MM1870A26TRE	0.26V	1500mA	1mA
2.7V	±2%	MM1870A27HBE	MM1870A27TRE	0.26V	1500mA	1mA
2.8V	±2%	MM1870A28HBE	MM1870A28TRE	0.26V	1500mA	1mA
2.9V	±2%	MM1870A29HBE	MM1870A29TRE	0.26V	1500mA	1mA
3.0V	±2%	MM1870A30HBE	MM1870A30TRE	0.26V	1500mA	1mA
3.1V	±2%	MM1870A31HBE	MM1870A31TRE	0.26V	1500mA	1mA
3.2V	±2%	MM1870A32HBE	MM1870A32TRE	0.26V	1500mA	1mA
3.3V	±2%	MM1870A33HBE	MM1870A33TRE	0.26V	1500mA	1mA
3.4V	±2%	MM1870A34HBE	MM1870A34TRE	0.26V	1500mA	1mA
3.5V	±2%	MM1870A35HBE	MM1870A35TRE	0.26V	1500mA	1mA
3.6V	±2%	MM1870A36HBE	MM1870A36TRE	0.26V	1500mA	1mA
3.7V	±2%	MM1870A37HBE	MM1870A37TRE	0.26V	1500mA	1mA
3.8V	±2%	MM1870A38HBE	MM1870A38TRE	0.26V	1500mA	1mA
3.9V	±2%	MM1870A39HBE	MM1870A39TRE	0.26V	1500mA	1mA
4.0V	±2%	MM1870A40HBE	MM1870A40TRE	0.26V	1500mA	1mA
4.1V	±2%	MM1870A41HBE	MM1870A41TRE	0.26V	1500mA	1mA
4.2V	±2%	MM1870A42HBE	MM1870A42TRE	0.26V	1500mA	1mA
4.3V	±2%	MM1870A43HBE	MM1870A43TRE	0.26V	1500mA	1mA
4.4V	±2%	MM1870A44HBE	MM1870A44TRE	0.26V	1500mA	1mA
4.5V	±2%	MM1870A45HBE	MM1870A45TRE	0.26V	1500mA	1mA
4.6V	±2%	MM1870A46HBE	MM1870A46TRE	0.26V	1500mA	1mA
4.7V	±2%	MM1870A47HBE	MM1870A47TRE	0.26V	1500mA	1mA
4.8V	±2%	MM1870A48HBE	MM1870A48TRE	0.26V	1500mA	1mA
4.9V	±2%	MM1870A49HBE	MM1870A49TRE	0.26V	1500mA	1mA
5.0V	±2%	MM1870A50HBE	MM1870A50TRE	0.26V	1500mA	1mA

* The parameter is not guaranteed in the model less than V_{OUT}=1.0V .

Downloaded from Arrow.com.

2 POWER SUPPLY ICs

150mA dual LDO

MM3548 Series

Outline

MM3548 is 150mA dual LDO by small package. The IC is used for a mobile phone's RF or CMOS sensor power supply by high PSRR and load response.

Applications

(1) Smart phones
(2) Tablet PCs
(3) Mobile phones
(4) Portable music Players
(5) Digital still cameras
(6) Portable games

Features (Unless otherwise specified, Ta=+25°C)

(1) Input voltage range .....1.6V to 6.0V
(2) Output voltage range .....1.2V to 5.0V
(3) Output voltage accuracy.....VOUT±1%(Vo>2V)
VOUT±20mV(Vo≦2V)
(4) Maximum output current .....150mA / 1ch
(5) Current Consumption .....0.1μA typ. (OFF)
40μA typ. / 1ch (No-Load)
(6) Dropout voltage .....0.21V typ. / 0.32V max.
(Io=150mA, Vo=3.0V)
(7) Line regulation.....0.02%/V typ. / 0.1%/V max.
(8) Load regulation .....10mV typ. / 40mV max.
(Io=1mA to 150mA)
(9) Vout Temperature coefficient ...±80ppm/°C typ.
(10) Output capacitor.....70dB typ. (f=1kHz)

Pin assignment

■ PLP-6C

(Top view)

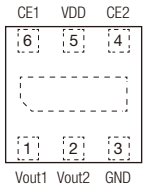

Model name structure

M M 3 5 4 8 □ □ □ □ R E

- Embossed taping E
- Housing R
- Package code
  - PLP-6C R
- Output voltage
  - Refer to "selection guide"
- Function type
  - CE=H-Active, with Discharge Function A

Downloaded from Arrow.com.

Selection guide

Part No.	Vout1			Vout2			Output Current (1ch)	No-Load Input Current (1ch typ.)
PLP-6C Package (5,000pcs/Reel)	Output Voltage	Accuracy	Dropout Voltage (typ.) Io=150mA	Output Voltage	Accuracy	Dropout Voltage (typ.) Io=150mA		
MM3548A01RRE	3.30V	±1%	0.21V	3.00V	±1%	0.21V	150mA	40μA
MM3548A02RRE	3.00V	±1%	0.21V	2.80V	±1%	0.27V	150mA	40μA
MM3548A03RRE	1.50V	±20mV	0.37V	1.20V	±20mV	0.42V	150mA	40μA
MM3548A04RRE	3.30V	±1%	0.21V	1.20V	±20mV	0.42V	150mA	40μA
MM3548A05RRE	2.85V	±1%	0.27V	2.85V	±1%	0.27V	150mA	40μA
MM3548A06RRE	2.80V	±1%	0.27V	2.80V	±1%	0.27V	150mA	40μA
MM3548A07RRE	1.80V	±20mV	0.31V	2.80V	±1%	0.27V	150mA	40μA
MM3548A08RRE	1.80V	±20mV	0.31V	1.80V	±20mV	0.31V	150mA	40μA
MM3548A09RRE	3.30V	±1%	0.21V	3.30V	±1%	0.21V	150mA	40μA
MM3548A10RRE	5.00V	±1%	0.21V	3.30V	±1%	0.21V	150mA	40μA
MM3548A11RRE	1.50V	±20mV	0.37V	2.85V	±1%	0.27V	150mA	40μA
MM3548A12RRE	2.85V	±1%	0.27V	3.10V	±1%	0.21V	150mA	40μA
MM3548A13RRE	1.80V	±20mV	0.31V	3.30V	±1%	0.21V	150mA	40μA
MM3548A14RRE	3.30V	±1%	0.21V	1.80V	±20mV	0.31V	150mA	40μA
MM3548A15RRE	2.50V	±1%	0.27V	2.50V	±1%	0.27V	150mA	40μA
MM3548A16RRE	3.00V	±1%	0.21V	4.20V	±1%	0.21V	150mA	40μA

Downloaded from Arrow.com.

2 POWER SUPPLY ICs

300mA dual LDO

MM3549 Series

Outline

MM3549 is 300mA dual LDO by small package. The IC is used for a mobile phone's RF or CMOS sensor power supply by high PSRR and load response.

Applications

(1) Smart phones
(2) Tablet PCs
(3) Mobile phones
(4) Portable music Players
(5) Digital still cameras
(6) Portable games

Features (Unless otherwise specified, Ta=+25°C)

(1) Input voltage range.....1.6V to 6.0V
(2) Output voltage range.....1.2V to 5.0V
(3) Output voltage accuracy .....VOUT±1%(Vo>2V)
VOUT±20mV(Vo≦2V)
(4) Maximum output current.....300mA / 1ch
(5) Current Consumption.....0.1μA typ. (OFF)
40μA typ. / 1ch (No-Load)
(6) Dropout voltage.....0.22V typ. / 0.29V max.
(Io=300mA, Vo=3.0V)
(7) Line regulation.....0.02%/V typ. /0.1%/V max.
(8) Load regulation.....10mV typ. / 40mV max.
(Io=1mA to 300mA)
(9) Vout Temperature coefficient...±100ppm/°C typ.
(10) Output capacitor .....65dB typ. (f=1kHz)

Pin assignment

■PLP-8E

(Top view)

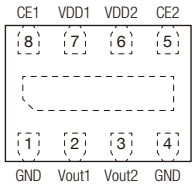

Model name structure

M M 3 5 4 9 □ □ □ □ R E

- Embossed taping E
- Housing B
- Package code
  - PLP-8E R
- Output voltage
  - Refer to "selection guide"
- Function type
  - CE=H-Active, with Discharge Function A

Downloaded from Arrow.com.

Selection guide

Part No.	Vout1			Vout2			Output Current (1ch)	No-Load Input Current (1ch typ.)
PLP-8E Package (5,000pcs/Reel)	Output Voltage	Accuracy	Dropout Voltage (typ.) Io=300mA	Output Voltage	Accuracy	Dropout Voltage (typ.) Io=300mA		
MM3549A01RRE	3.30V	±1%	0.22V	3.00V	±1%	0.22V	300mA	40μA
MM3549A02RRE	3.00V	±1%	0.22V	2.80V	±1%	0.25V	300mA	40μA
MM3549A03RRE	1.50V	±20mV	0.35V	1.20V	±20mV	0.42V	300mA	40μA
MM3549A04RRE	3.30V	±1%	0.22V	1.20V	±20mV	0.42V	300mA	40μA
MM3549A05RRE	2.85V	±1%	0.25V	2.85V	±1%	0.25V	300mA	40μA
MM3549A06RRE	2.80V	±1%	0.25V	2.80V	±1%	0.25V	300mA	40μA
MM3549A07RRE	1.80V	±20mV	0.30V	2.80V	±1%	0.25V	300mA	40μA
MM3549A08RRE	1.80V	±20mV	0.30V	1.80V	±20mV	0.30V	300mA	40μA
MM3549A09RRE	3.30V	±1%	0.22V	3.30V	±1%	0.22V	300mA	40μA
MM3549A10RRE	5.00V	±1%	0.22V	3.30V	±1%	0.22V	300mA	40μA
MM3549A11RRE	1.50V	±20mV	0.35V	2.85V	±1%	0.25V	300mA	40μA
MM3549A12RRE	2.85V	±1%	0.25V	3.10V	±1%	0.22V	300mA	40μA
MM3549A13RRE	1.80V	±20mV	0.30V	3.30V	±1%	0.22V	300mA	40μA
MM3549A14RRE	3.30V	±1%	0.22V	1.80V	±20mV	0.30V	300mA	40μA
MM3549A15RRE	2.50V	±1%	0.25V	2.50V	±1%	0.25V	300mA	40μA

Downloaded from Arrow.com.

Precision adjustable shunt regulator

MM1431 Series

Outline

This IC is 3-termial adjustable shunt regulator, which provides a highly accurate 0.4% bandgap reference voltage. The output voltage can be adjusted to any value between reference voltage V_{REF} and 35 volts with two external resistors. Moreover, there are a lot of ranges of the application as a zener diode besides the replacement is possible because it has steep turn-on characteristics.

Features

(Unless otherwise specified, Ta=+25°C)

(1) Reference voltage tolerance .....V_{REF}=2.495V±0.8% (MM1431C, MM1431E, MM1431G)
2.495V±0.5% (MM1431F)
2.495V±0.4% (MM1431D)

(2) Output voltage can be adjusted .....$V_{REF} \leqq V_o \leqq 35V$

(3) Low Dynamic Output Impedance..... | ZKA | ≦ 0.4Ω typ.

(4) Specifications

- Operating Temperature .....−30°C to +105°C
- Cathode to Anode voltage .....V_{KA} .....V_{REF} to 35 V
- Cathode current .....I_K .....0.6mA to 50mA
- Reference voltage deviation over temperature range.....±10mV .....(V_{KA}=V_{REF}, I_K=10mA Ta=−30°C to +85°C)
- Minimum Cathode Current .....I_{Kmin}.....0.6mA max.
- Off-state Cathode Current .....I_{OFF}.....0.1μA typ.

Pin assignment

■ SC-82ABB

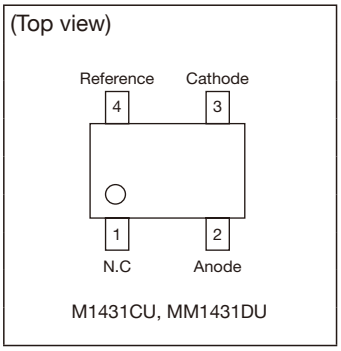

■ SOT-23A

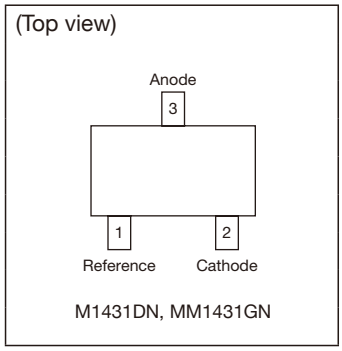

■ SOT-23A

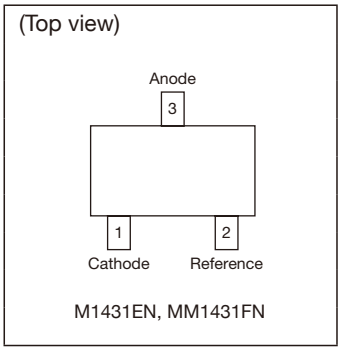

■ SOT-25A *

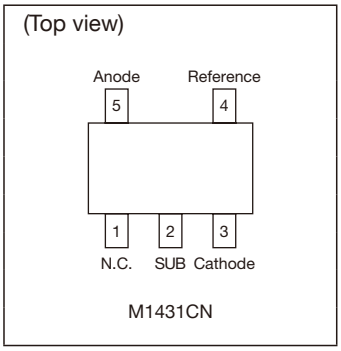

* note : The second terminal is SUB, so connect the terminal to GND.

Selection guide

Parts no.	Package	Reference voltage	Cathode current	Dynamic impedance
MM1431CURE	SC-82ABB	2.495V±0.8%	0.6 to 50 mA	0.4Ω typ. / 0.8Ω Max
MM1431DURE	SC-82ABB	2.495V±0.4%	0.6 to 50 mA	0.4Ω typ. / 0.8Ω Max
MM1431CNRE	SOT-25A	2.495V±0.8%	0.6 to 50 mA	0.4Ω typ. / 0.8Ω Max
MM1431DNRE	SOT-23A	2.495V±0.4%	0.6 to 50 mA	0.4Ω typ. / 0.8Ω Max
MM1431ENRE	SOT-23A	2.495V±0.8%	0.6 to 50 mA	0.4Ω typ. / 0.8Ω Max
MM1431FNRE	SOT-23A	2.495V±0.5%	0.6 to 50 mA	0.4Ω typ. / 0.8Ω Max
MM1431GNRE	SOT-23A	2.495V±0.8%	0.6 to 50 mA	0.4Ω typ. / 0.8Ω Max

Downloaded from Arrow.com.

Precision adjustable shunt regulator

MM1530 Series

Outline

This IC is 3-termial adjustable shunt regulator, which provides a highly accurate 0.5% bandgap reference voltage. The output voltage can be adjusted to any value between reference voltage V_{REF} and 35 volts with two external resistors. Maoreover, there are a lot of ranges of the application as a zener diode besides the replacement is possible because it has steep turn-on characteristics.

Features

(Unless otherwise specified, Ta=+25°C)

(1) Reference voltage tolerance ..... V_{REF}=1.270V±0.8% (MM1530CU, MM1530EN)
1.250V±0.8% (MM1530DU)
1.240V±0.5% (MM1530DN, MM1530JN)

(2) Output voltage can be adjusted ..... $V_{REF} \leqq V_o \leqq 12V$

(3) Low Dynamic Output Impedance ..... | ZKA | ≦ 0.4Ω typ.

(4) Specifications

- Operating Temperature ..... −30°C to 105°C
- Cathode current ..... I_K .....0.3 to 30 mA
- Reference voltage deviation over temperature range ..... 6mV (V_{KA}=V_{REF}, I_K=10mA Ta=0 to +70°C)
- Minimum Cathode Current ..... I_{Kmin} .... 0.3mA max.
- Off-state Cathode Current ..... I_{OFF}0.1μA typ.

Pin assignment

■ SC-82ABB

(Top view)

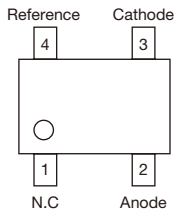

MM1530CU, MM1530DU

■ SOT-23A

(Top view)

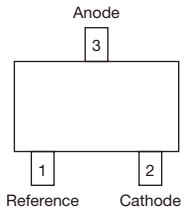

M1530DN, MM1530EN, MM1530JN

Selection guide

Parts no.	Package	Reference voltage	Cathode current	Minimum Cathode Current	Dynamic impedance
MM1530CURE	SC-82ABB	1.270V±0.8%	0.3 to 15 mA	0.15mA typ. / 0.3mA Max	0.4Ω typ. / 0.8Ω Max
MM1530DURE	SC-82ABB	1.250V±0.8%	0.3 to 30 mA	0.15mA typ. / 0.3mA Max	0.4Ω typ. / 0.8Ω Max
MM1530DNRE	SOT-23A	1.240V±0.5%	0.3 to 30 mA	0.15mA typ. / 0.3mA Max	0.2Ω typ. / 0.6Ω Max
MM1530ENRE	SOT-23A	1.270V±0.8%	0.3 to 15 mA	0.15mA typ. / 0.3mA Max	0.4Ω typ. / 0.8Ω Max
MM1530JNRE	SOT-23A	1.240V±0.5%	0.08 to 30 mA	0.05mA typ. / 0.08mA Max	0.2Ω typ. / 0.6Ω Max

Downloaded from Arrow.com.

Downloaded from Arrow.com.

2 POWER SUPPLY ICs

Electrical characteristics (Unless otherwise specified, Ta=+25°C)

DC-DC converters

Type	Power MOSFET	Model	Control	Input voltage	Output voltage	Output voltage accuracy	Maximum output current	Frequency	Current consumption	Packages
Boost	Built-in	MM3333	PWM/PFM	1.8V to 5.5V	2.5V to 4.5V	±2.4%	100mA	250kHz	74μA	SOT-26B
	Built-in	MM3355	PWM/PFM	0.9V to 5.5V	1.8V to 5.5V	±3%	200mA	100kHz	100μA	SOP-8D
Buck	Built-in	MM3472 NEW	PWM/PFM	2.0V to 5.5V	0.8V to 3.3V	±1.5%	600mA	2.25MHz	11μA	SSON-6L
	Built-in	MM3370	PWM	7V to 27V	0.92V to	±2%	3A	500kHz	0.8mA	HSOP-8A
	Built-in	MM3542	PWM	4.5V to 20V	0.8V to 16.0V	±1%	2A	500kHz	1.0mA	SOP-8D
	Built-in	MM3543	PWM	4.5V to 20V	0.8V to 16.0V	±1%	3A	500kHz	1.0mA	HSOP-8C
	Built-in	MM3630BV NEW	PWM	4.5V to 33V	3V to 7V	±1.5%	2.5A	200KHz to 1MHz	1.5mA	TSOP-20E
	Built-in	MM3630BR NEW	PWM	4.5V to 33V	3V to 7V	±1.5%	1.5A	200KHz to 1MHz	1.5mA	SQFN-24A
	2ch built-in +LDO	MM3558	PWM	3.0V to 5.5V	DCDC:1V to 5.5V LDO:3.3V	±2%	1.5A/1.5A	2MHz	0.6mA	SQFN-16A
Inverter	–	MM3631	Charge pump	1.5V to 3.4V (Vin)	–Vin	–	50mA	120kHz	70μA	SOT-26B

AC-DC converters

Use	Model	Toporogy	Input voltage	Rated	Frequency	Package
[Primary-side] QR controller	MM3661 NEW	Flyback QR	10V to 24V	30V (Startup-pin 500V)	25kHz to 75kHz	SOP-10A
[Secondary-side] Synchronous rectifier	MM3667 NEW	Flyback QR Half-bridge LLC	6V to 15V	17V (Usable more than 17V with a diode)	A rank: ~500kHz (LLC) ~200kHz (QR) B rank: ~170kHz (QR)	SOP-8J
	MM3473	Flyback QR	8.0V to 28V	28V	25kHz to 200kHz	SOP-8D

Downloaded from Arrow.com.

2 POWER SUPPLY ICs

Electrical characteristics (Unless otherwise specified, Ta=+25°C)

LED lighting ICs

White LED drivers

Type	Model	Control	Dimming	Input Voltage	Frequency	Efficiency (typ.)	Package
7 LEDs	MM3097	PWM	DC / PWM	2.5V to 6.0V	1.2MHz	85%	SOT-25A

LED lighting power controller

Type	Model	PCB	AC input	Applications	LED output	Dimming	Package
Supported phase dimming	MM3760 NEW	Non-Isolated	100V	10V to 25.5V	1W to 25W	DC / PWM / Phase (Triac)	SOP-10A
Built in PFC	MM3460 MM1837	Isolated	100V/200V	10V to 25.5V	5W to 60W	DC / PWM	SOP-8D

Downloaded from Arrow.com.

Step-up DC-DC converter IC

MM3333

Outline

This IC is a boost DC-DC converter with automatic PWM/PFM switching function.
A boost DC-DC converter can be configured by using only coil, capacitor, and diode as external components.
It is optimal for applications for mobile equipment that will need high efficiency due to characteristics of small package or low current consumption.

Applications

(1) Power supply for mobile equipment such as digital still cameras, Tablet PCs, etc.
(2) Power supply for mobile music player.
(3) Power supply for microprocessor.

Features (Unless otherwise specified, Ta=+25°C)

(1) It has realized high efficiency with low current consumption.
(2) Built-in phase compensation circuit.
(3) Electrical characteristics
- Operating supply voltage....1.8V to 5.5V
- Consumption current.....74.3μA typ. (operation)
  .....0.5μA typ. (power-off)
- Oscillator frequency.....250kHz
- Maximum duty cycle.....78% typ.
- Output voltage.....3.2V
- Output voltage accuracy ....± 2.4%
- External parts.....Inductors, Capacitors, Diodes

Pin assignment

SOT-26B

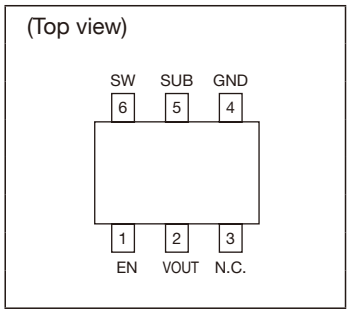

Block diagram

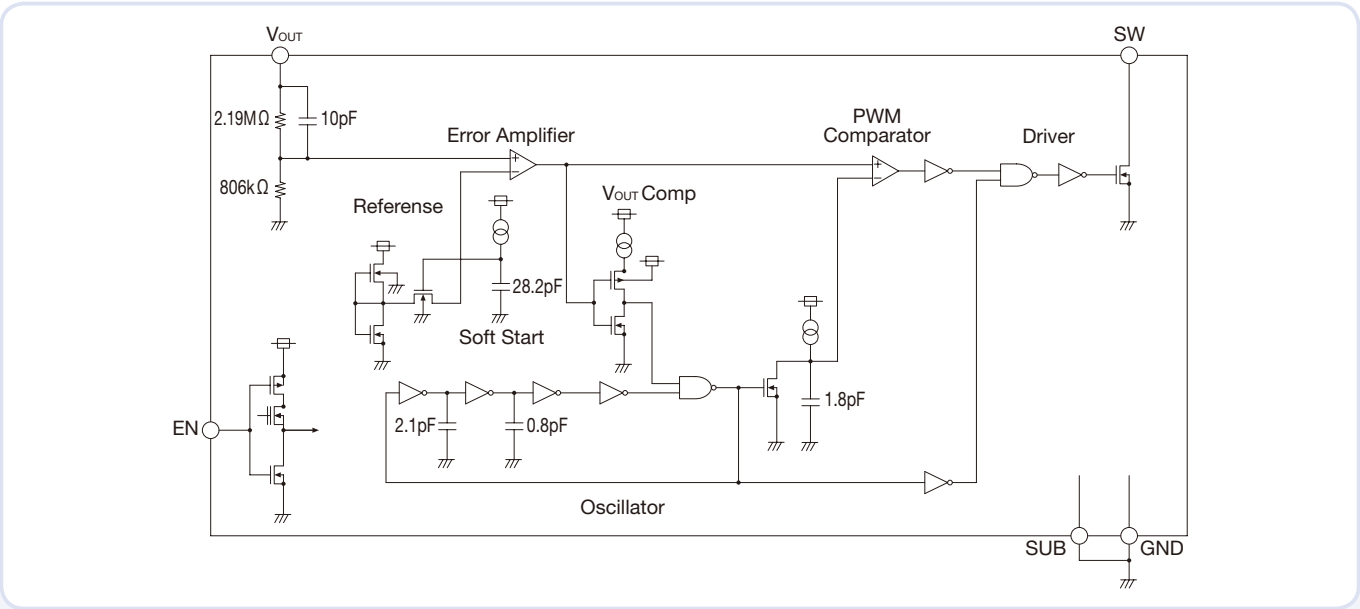

Downloaded from Arrow.com.

Typical application circuit

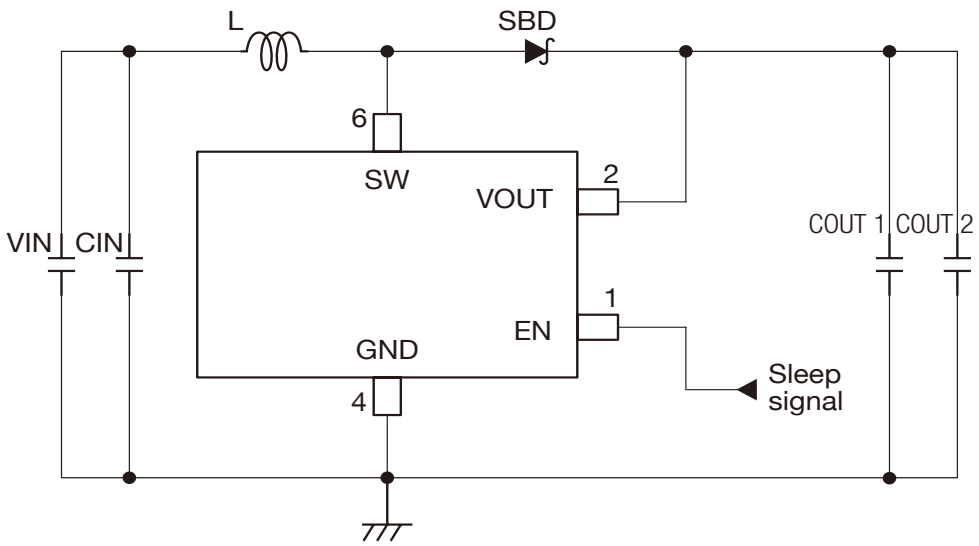

Downloaded from Arrow.com.

Boost DC-DC converter with UVLO function

MM3355

Outline

This is a PWM/PFM-controlled Boost DC-DC converter IC.
Its UVLO(Under Voltage Lock Out) function prevents dry-cell leakage due to overdischage.
UVLO detection 0.9V, support a single dry-cell battery.

Applications

(1) Power supply for mobile equipment such as digital still cameras, Tablet PCs, etc.
(2) Power supply for mobile music player.
(3) Power supply for microprocessor.

Features (Unless otherwise specified, Ta=+25°C)

(1) Under voltage lock out (UVLO)
(2) Automatic PWM/PFM control
(3) Internal bypass SW (0.3Ω typ.)
(4) Electrical characteristics
- Operating supply voltage... 0.9V to 5.5V
- Output voltage..... 1.8V to 5.0V
- Output voltage accuracy ... ± 3%
- Oscillator frequency..... 100kHz
- Consumption current..... 100μA typ. (operation)
  0.1μA typ. (power-off)

Pin assignment

SOP-8D

(Top view)

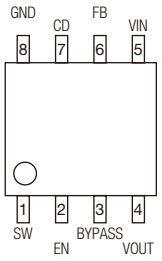

Pin no.	Function
1	Power Switch PIN
2	Enable Pin For ON/OFF
3	Bypass Switch Input PIN
4	Output Voltage PIN
5	Supply Voltage PIN
6	Feedback PIN
7	Capacitor Connect PIN For UVLO Dead Time
8	Ground PIN

Product list

Product name	Power FET	Input voltage range	Output voltage	Maximum Output Current	IC's current consumption (operating)	IC's current consumption (power-off)	Package
MM3355AFFE	Built-in	0.9~5.5V	1.8~5.0V	200mA	100μA	0.1μA	SOP-8D

Downloaded from Arrow.com.

Block diagram

MM3355AF

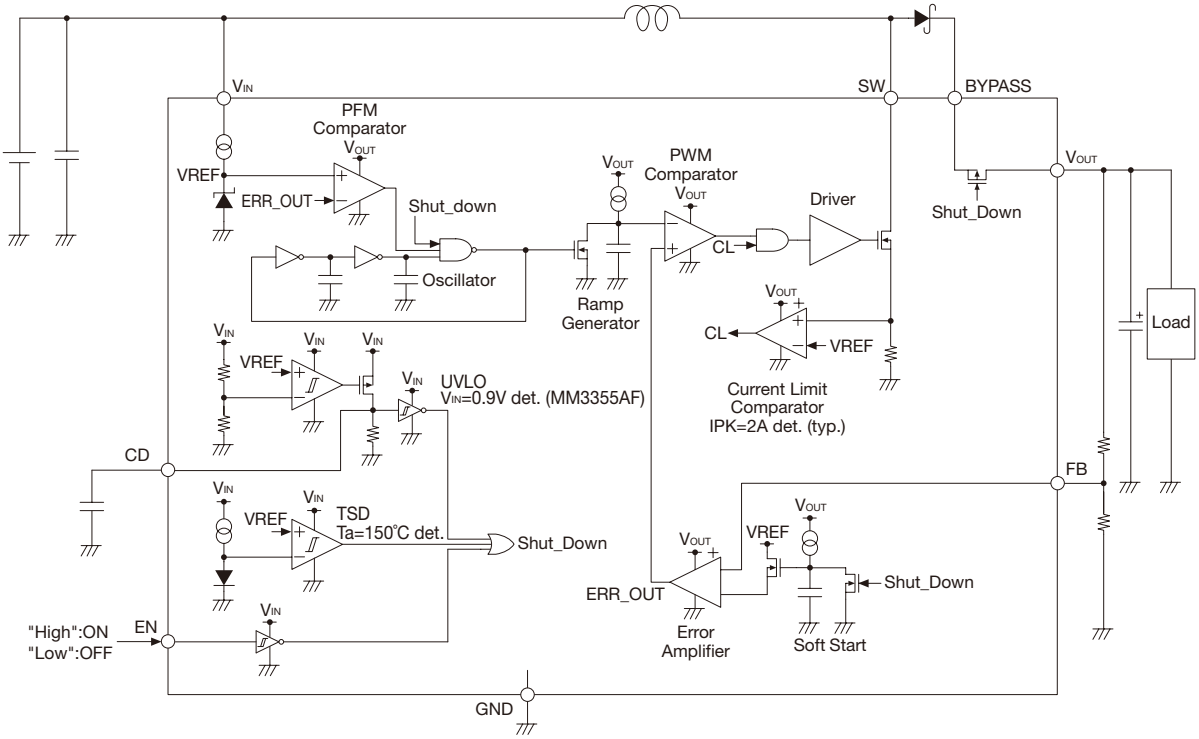

Typical application circuit

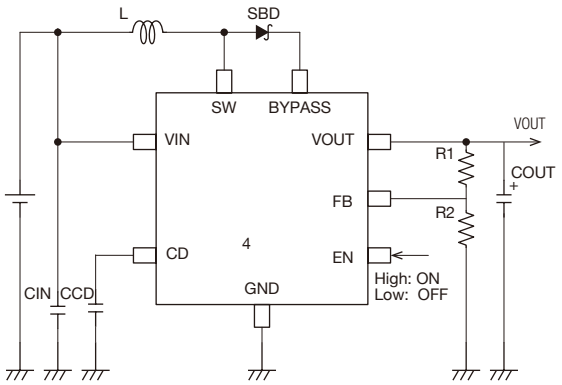

Downloaded from Arrow.com.

Buck, low Iq and high efficiency, 0.6A output

MM3472

Outline

This IC is a synchronous rectifying step-down DC/DC converter which is foucused on space minimizing design, high oscillation frequency (2.25MHz) and high efficiency by fewer external components (1 coil and 2 capacitors) in order to meet miniaturization and low power consumption.
Package is realizes space reduction of the mount area by mounting to the small SSON-6L.

Applications

(1) Mobile Phone
(2) Digital Still Cameras
(3) Battery-Operating Devices

Features (Unless otherwise specified, Ta=+25°C)

(1) Input Voltage Range.....2.0V to 5.5V
(2) Output Voltage Range.....0.8V to 3.3V
(3) FB Voltage (PWM) .....V_{FB}±1.5%
(4) FB Voltage (PFM) .....V_{FB}±2.0%
(5) Output Current 600mA
(6) Oscillation Frequency.....2.25MHz
(7) Quiecent Current.....11μA
(8) Efficiency.....(VIN=3.6V, VOUT=1.8V)
I_{OUT}=0.01mA : 25%
I_{OUT}=100mA : 90%
(9) Protection.....UVLO, Soft start,
Current limit,
Thermal shutdown
(10) PWM/PFM .....Automatic

Pin assignment

SSON-6L

(Top view)

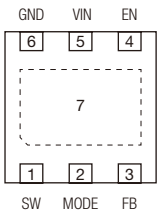

Pin no.	Function
1	Power Switch PIN
2	Mode pin
3	Output voltage feedback pin
4	Enable pin
5	Power supply input pin
6	Ground pin
7	Thermal pad

Application circuit

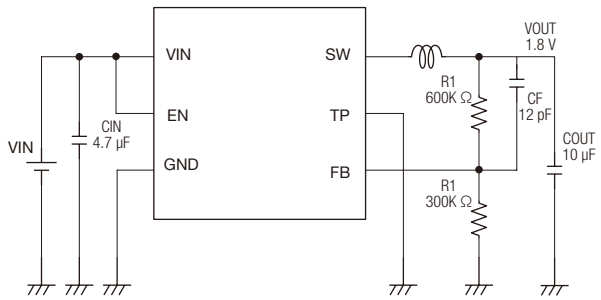

Downloaded from Arrow.com.

Performance characteristics

Efficiency

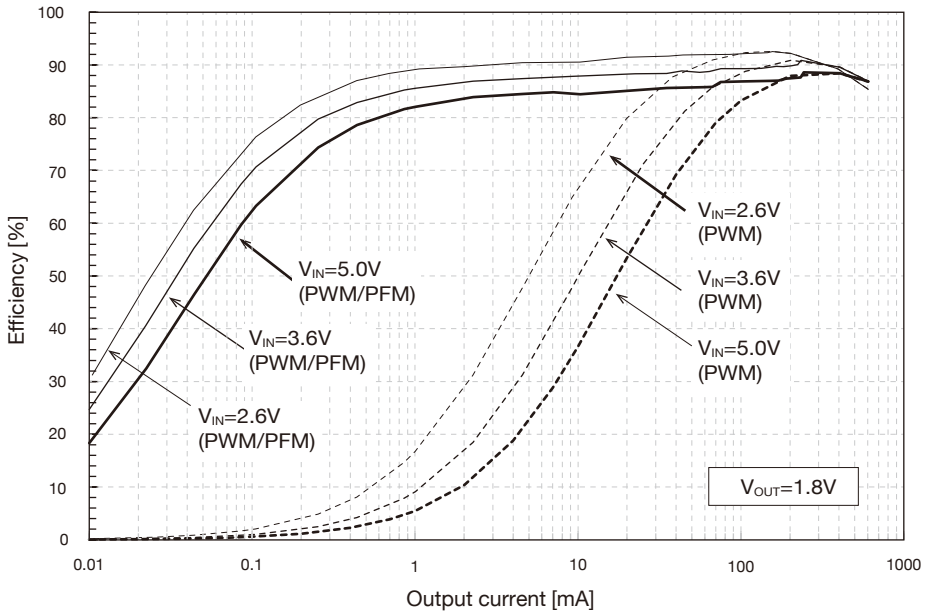

Load transient

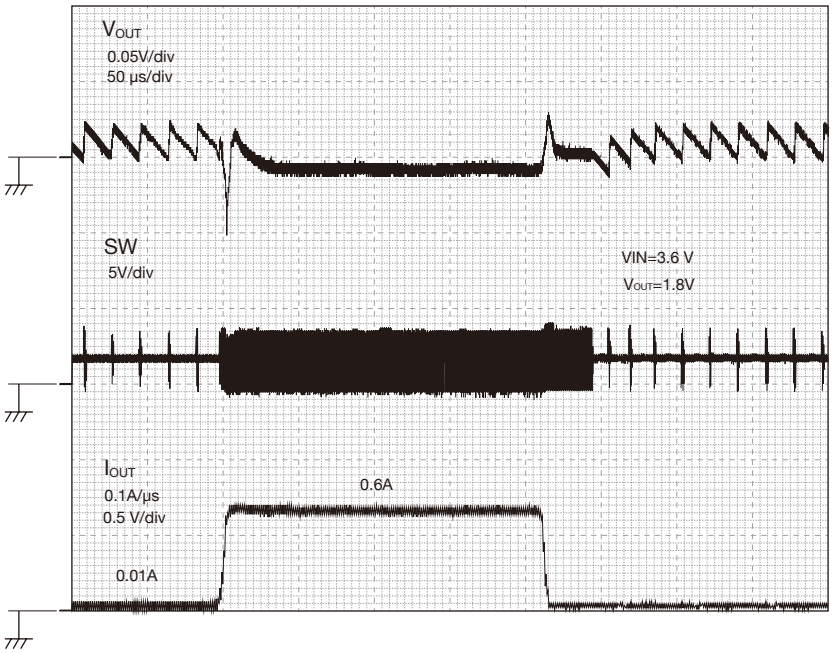

Downloaded from Arrow.com.

Buck DC-DC converter IC

MM3370

Outline

This is a diode rectifier-type buck DC-DC converter IC with integrated Power MOS FET.The IC operates at a maximum output current of 3A.This is suitable for power supplies of Flat TVs and DVD/Blu-ray recorders because of its more stable load transient response (changes from 1A to 2A, approx. 50mV)and wider input voltage range (7 to 27V).

Applications

(1) Flat TVs
(2) DVD/Blu-ray recorder

Features (Unless otherwise specified, Ta=+25°C)

(1) Soft Start Function
(2) Shut Down Function
(3) Current Limit Function
(4) Electrical characteristics
- Operating supply voltage..... 7V to 27V
- Output voltage..... 0.92V to
- Reference Voltage accuracy..... ±2%
- Maximum Output Current..... 3A
- Oscillation Frequency..... 500kHz
- Consumption current..... 0.8mA (operation)
  20μA (power-off)

Pin assignment

HSOP-8A

(Top view)

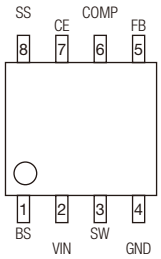

Pin no.	Symbol	Function
1	BS	Boost Flying-Capacitor Connection
2	VIN	Power Supply Voltage Input
3	SW	Inductor Connection
4	GND	Ground
5	FB	Feedback Input
6	COMP	Compensation Node
7	CE	Chip Enable Input
8	SS	Soft Start Control Input

Downloaded from Arrow.com.

Block diagram

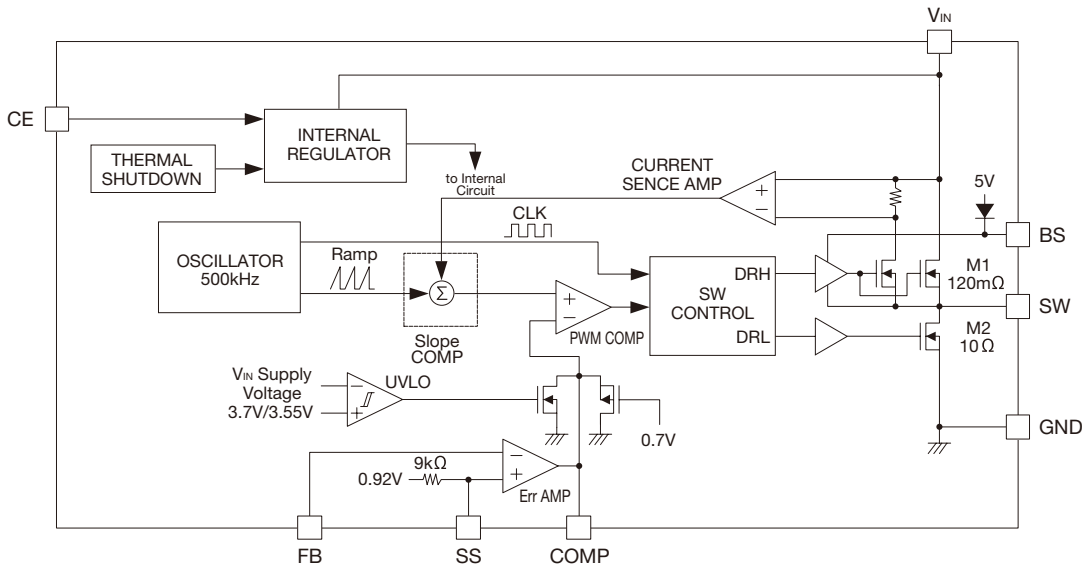

Typical application circuit

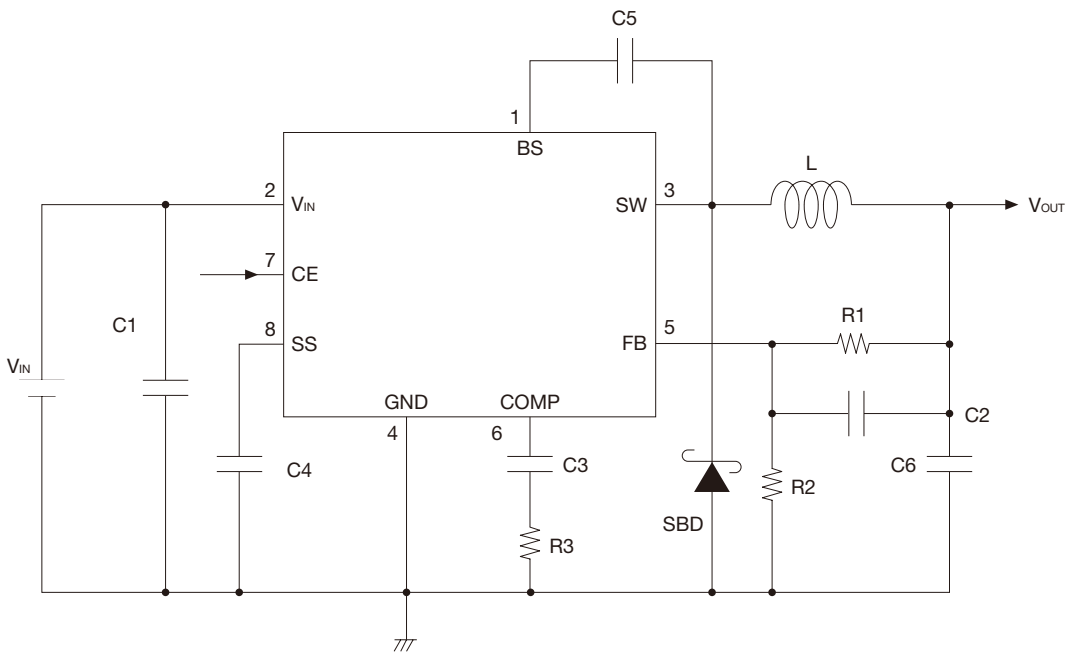

Downloaded from Arrow.com.

Buck 2A/3A output DC-DC converter IC

MM3542 / MM3543

Outline

This is a Synchronous Buck DC-DC converter IC with integrated Power MOS FET.
Wide voltage input range (4.5V to 20V) ensures the operation at the maximum output current of 2A/3A.
The integrated low ON resistor power transistor achieves high efficiency, space saving, and cost reduction.

Applications

(1) Flat TVs
(2) DVD/Blu-ray recorder

Features (Unless otherwise specified, Ta=+25°C)

(1) Wide voltage input range (4.5V to 20V) ensures the operation at the maximum output current of 2A/3A.
(2) High-speed transient response achieved by current mode control
(3) Safety by latch protection circuit when over-current and short-circuited
(4) It enabled the parts nearby to downsize with its higher frequency.
(5) Electrical characteristics

- Input Voltage Range ..... 4.5V to 20V
- Output Voltage Range ..... 0.8V to 16V
- Reference Voltage accuracy ..... ±1%
- Maximum Output Current 2A (MM3542)
  3A (MM3543)
- Oscillation Frequency ..... 500kHz typ.
- Current limit ..... 3.5A typ.(MM3542)
  4.5A typ.(MM3543)
- Timer latch time ..... 1ms typ.
- Soft Start Function..... built-in
- Shut Down Function (CEpin) ..... built-in

Pin assignment

■SOP-8D

(Top view)

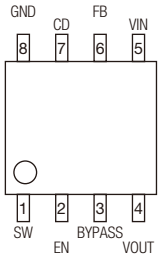

■HSOP-8C

(Top view)

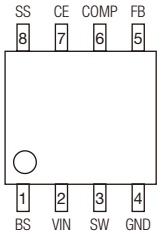

Pin no.	Function
1	Bootstrap capacitor connection pin
2	Power supply pin
3	Inductor connection pin
4	Ground pin
5	Output voltage feedback pin
6	Phase compensation pin
7	Chip enable pin
8	Soft start control pin

Downloaded from Arrow.com.

Block diagram

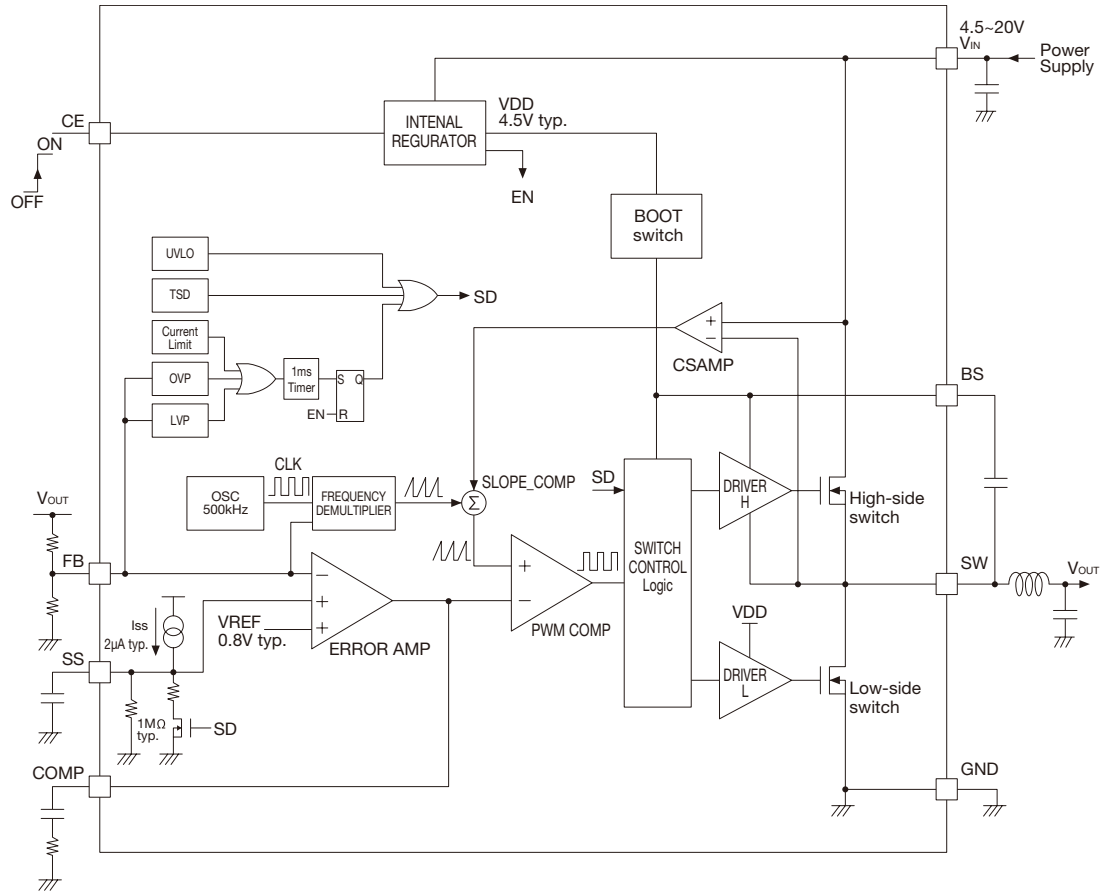

Typical application circuit

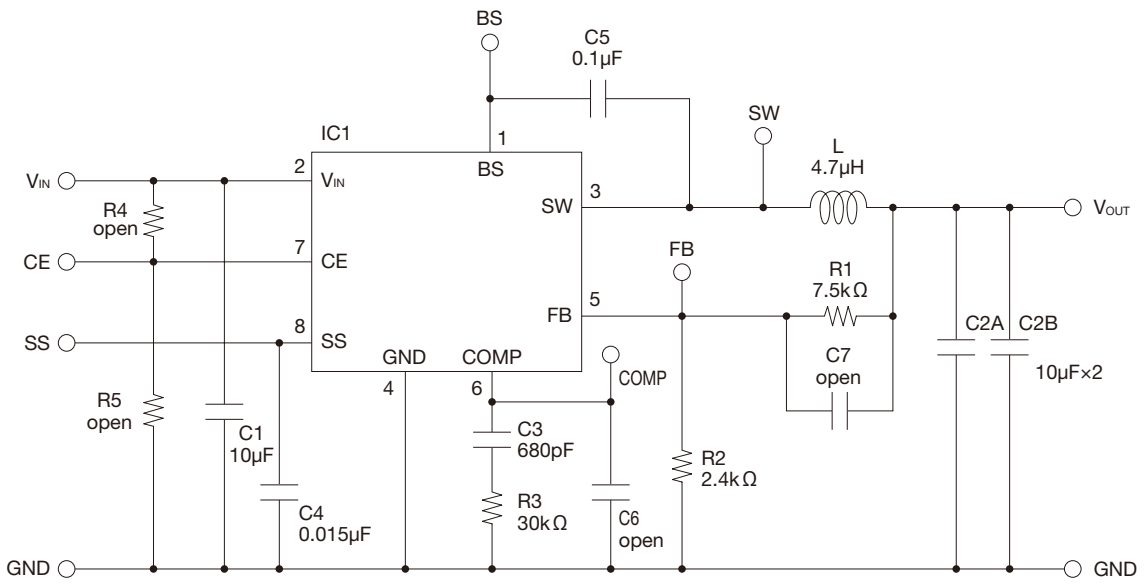

Downloaded from Arrow.com.

2 POWER SUPPLY ICs

Output voltage compensation DC/DC converter IC for USB MM3630BV/BR

Outline

This IC is an output voltage compensation with buck DC/DC converter IC that are intended for use USB power supply in-vehicle accessories.
It supplies a stable output voltage on a wide load range, by compensating the output loss caused bycable resistance.
Series line-up the MM3630BV(2.5A) and MM3630BR(1.5A). Selectable according to the your application.

Applications

(1) Car Audio
(2) Car Navigation
(3) Connector Box

Features (Unless otherwise specified, Ta=+25°C)

(1) Output voltage compensation for USB powr supply.
Supports to be able to meet the USB standard by compensating a loss due to cable resistance.
(2) Can be set in the range of 200kHz to 1MHz switching frequency by external resistor or SYNC.
Avoid noise interference to the AM band by this function.
(3) Built-in MOSFET and synchronous rectification operating.
To reduce external component.
(4) Characteristics

- Absolute maximum rating..... 40V
- Operating voltage .....4.5V to 33V
- Output voltage .....3V to 7V
- Referance voltage .....0.8V±1.5%
- Switching frequency .....200kHz to 1000kHz
- Output current limit .....Adjustable
- Output current 2.5A (MM3630BV)
  1.5A (MM3630BR)

Pin assignment

TSOP-20E (MM3630BV)

(Top view)

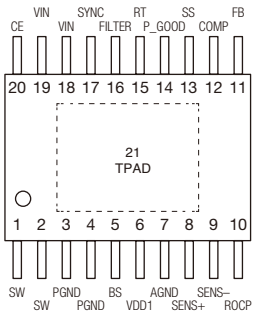

SQFN-24A (MM3630BR)

(Top view)

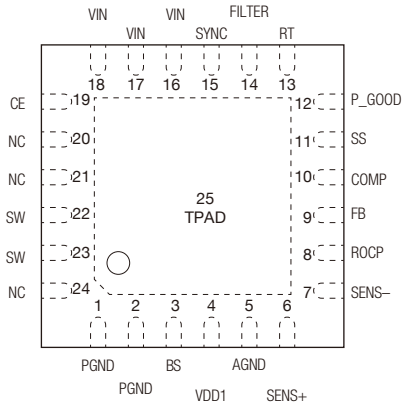

Downloaded from Arrow.com.

Block diagram

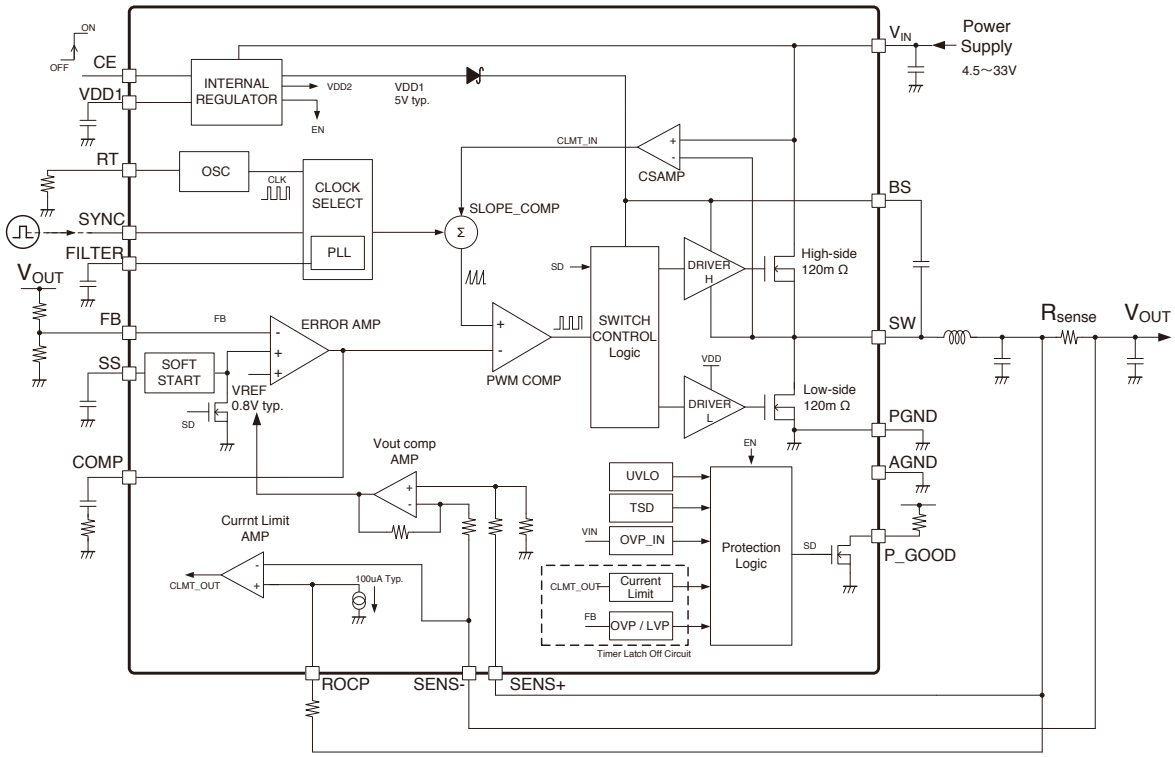

Efficiency characteristic

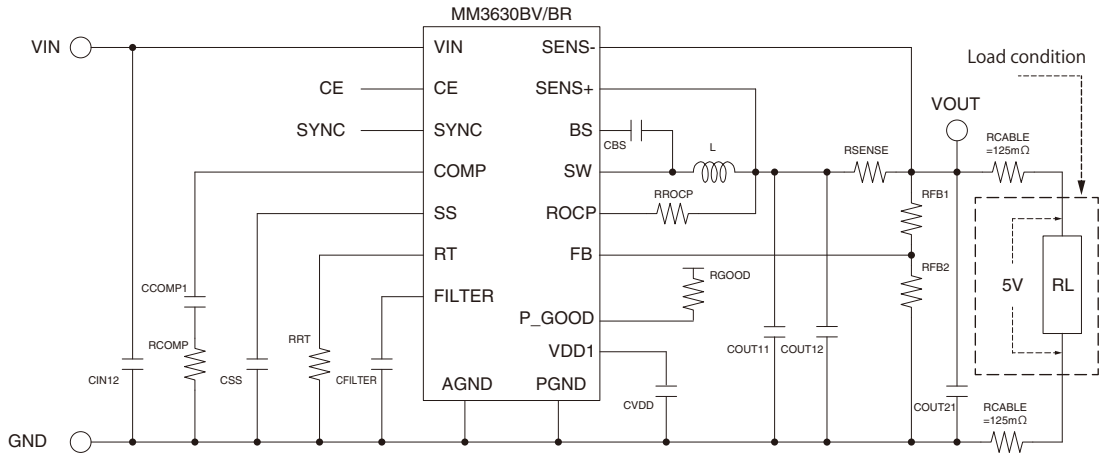

Downloaded from Arrow.com.

Multifunction PMIC

MM3558

Outline

This IC is compound power supply IC which built in Synchronous Buck DC-DC converter 2ch, LDO 1ch, and P-GOOD 2ch.
The ripple of the input current is decreased so that the DC-DC converter of 2ch may work by the opposite phase, and a low noise is achieved. Because the output voltage can be set by external resistance, it is possible to use it according to various output conditions.

Applications

(1) Printers, multifunction machines

Features (Unless otherwise specified, Ta=+25°C)

(1) Input Operating Voltage Range ..... 3.0V to 5.5V
(2) Shutdown Supply Current ..... 0.1μA Typ.
(3) Temperature Range ..... –30°C~85°C
(4) DC-DC converters
- Output Voltage ..... 1.0V to PVIN ±2%
- Maximum Output Current 1.5A
- Oscillator frequency ..... 2MHz Typ.
- Output Voltage is changeable in external parts.
- start/stop sequence circuit ..... Built-in
- Output OverVoltage Protection function.. 0.72V Typ.
- Built-in SoftStart circuit ..... 1.5ms Typ.
- Built-in OverCurrent detection timer..... 1.5ms Typ.

(5) LDO
- Output Voltage ..... 3.3V ±1%
- Dropout voltage ..... 0.10V Typ.
  (IOUT=10mA/VIN=3.1V)

(6) P-GOOD
- Input/Output Over Voltage/Low Voltage, Over Current, and Thermal detection

Pin assignment

SQFN-16A

(Top view)

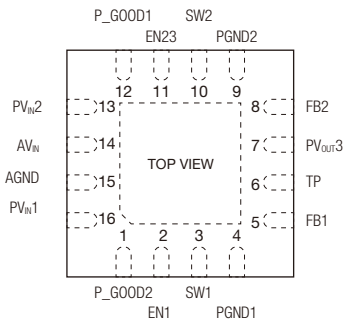

Pin no.	Function
1	Power Good output pin
2	Enable pin for ON/OFF
3	Power switched pin
4	Ground pin
5	DC-DC output voltage feedback pin
6	Test pin
7	Regulator output pin
8	DC-DC output voltage feedback pin
9	Ground pin
10	Power switched pin
11	Enable pin for ON/OFF
12	Power Good output pin
13	Power supply input pin
14	Power supply input pin
15	Ground pin
16	Power supply input pin

Downloaded from Arrow.com.

Block diagram

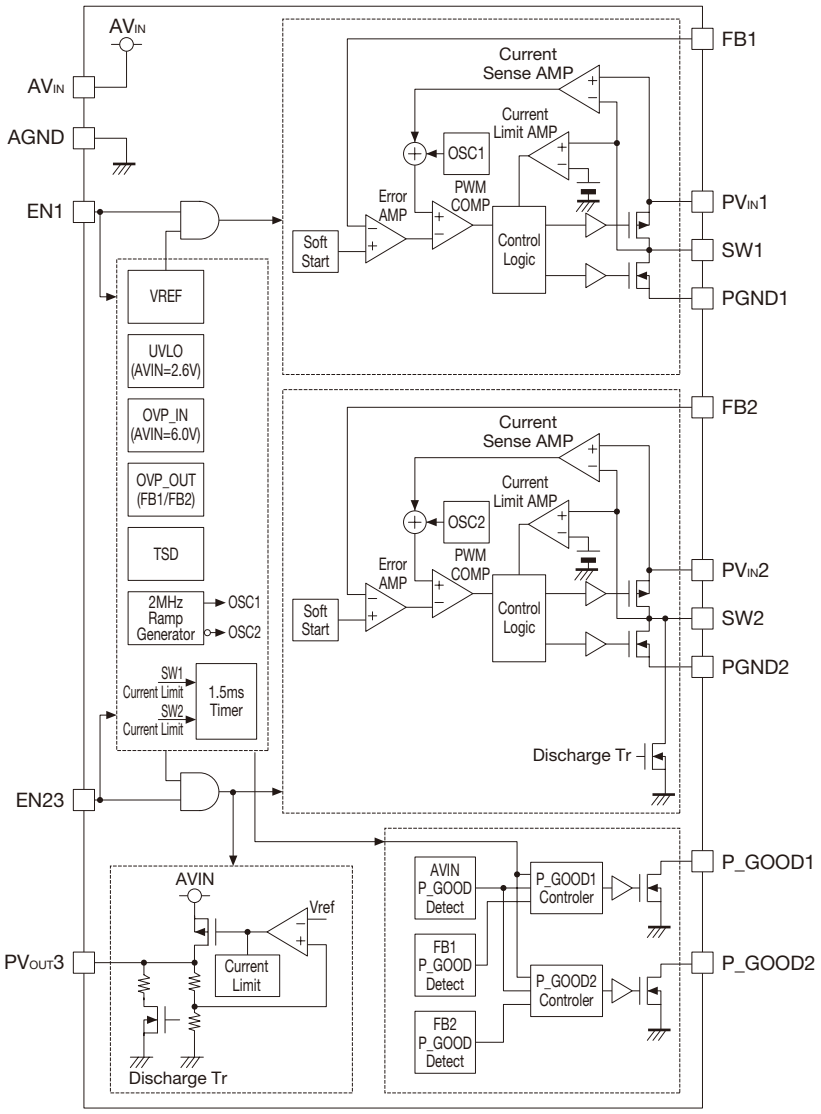

Downloaded from Arrow.com.

Typical application circuit

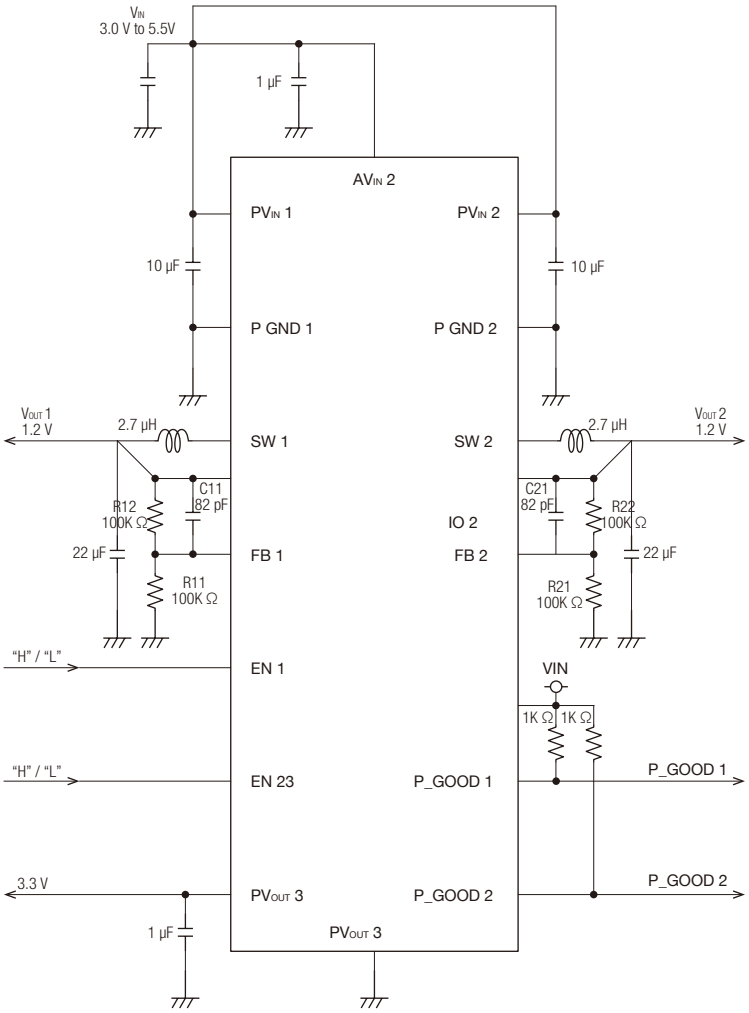

Downloaded from Arrow.com.

2 POWER SUPPLY ICs

Charge pump voltage inverter

MM3631

Outline

This IC is a charge pump voltage inverter. A positive input voltage(+1.5V to +3.4V) is converted to a negative voltage using two external capacitors.
The device is small packaged in a 6-pin SOT-26B (2.9×2.8×1.15mm).
CE circuit included. Stand-by current is less than 1 µA,reduce the quiecent current.

Applications

(1) Portable devices
(2) Operational Amplifier Negative Power Supply

Features (Unless otherwise specified, Ta=+25°C)

(1) Input voltage range ..... 1.5V to 3.4V
(2) Output voltage range ..... Vin
(3) Operating temperature range..... –30°C to +80°C
(4) Output current..... 50mA
(5) consumption current (CE=L) ..... 70µA typ.
(6) Stand-by consumption current(CE=H)... 1µA
(7) Efficiency..... 93% (IL=1mA, VIN=2.8V)
(8) Oscillation frequency..... 120kHz typ.
(9) Protective function ..... Vin voltage protection

Pin assignment

SOT-26B

(Top view)

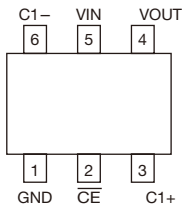

Pin no.	Function
1	GND
2	Chip Enable Input
3	Positive charge pump capacitor terminal
4	Negative output terminal
5	VDD terminal
6	Negative charge pump capacitor terminal

Downloaded from Arrow.com.

Block diagram

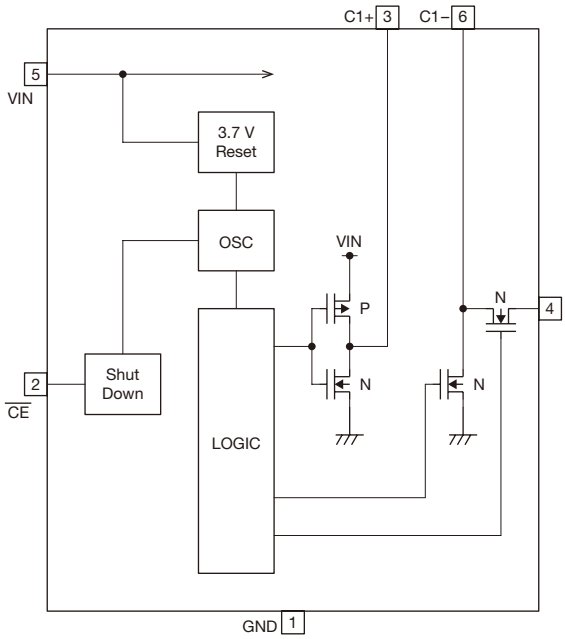

Efficiency characteristic

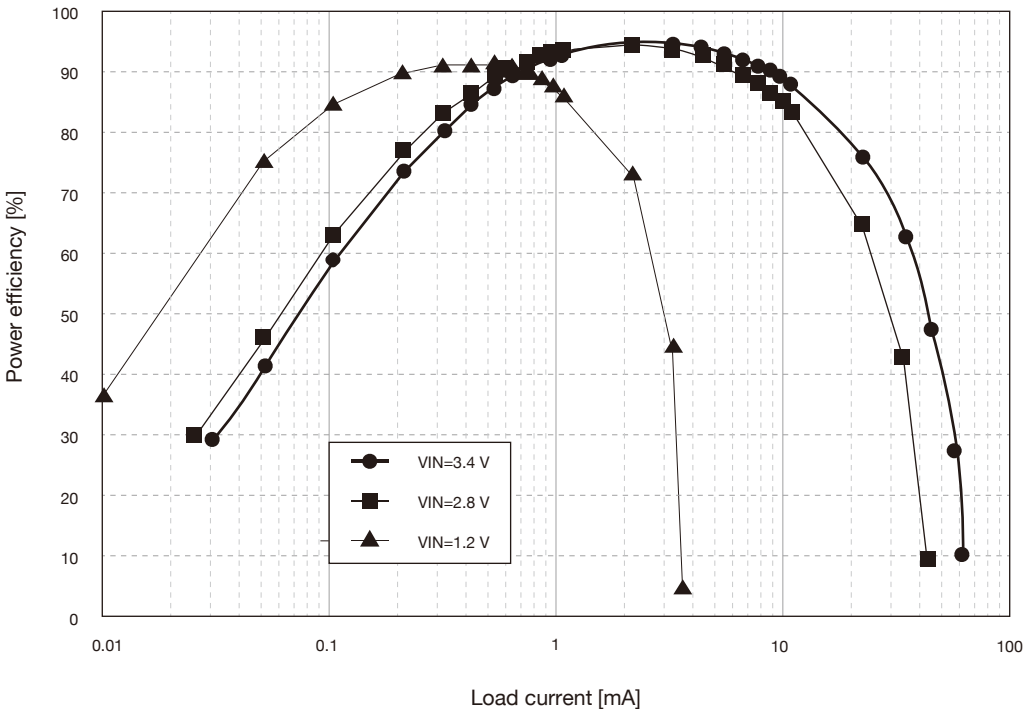

Downloaded from Arrow.com.

Primary-side QR controller

MM3661

Outline

MM3661 is a quasi resonant control IC for AC-DC converter. This control helps to keep the EMI low by soft switching. This IC has a built-in start-up circuit that 500V tolerates voltage. It helps to which improve start-up speed with the start-up circuit loss reduction. This IC contributes to the high efficiency at light-load by frequency decrease function with Burst operation.
In addition, This IC is equipped with AC detection function and load detection function or adedicated output terminal. Thereby it is possible to realize a the start-stop control and outputvoltage control of the PFC circuit .

Applications

(1) AC adapters
(2) Game console
(3) TV
(4) Printer
(5) Various consumer electronics

Features (Unless otherwise specified, Ta=+25°C

(1)Absolute maximum rating(HV pin)....500V
(2) Recommended operating voltage....10V to 24V
(3) PFC drive voltage.....Vcc
(4) Operating current .....0.72mA (typ.)
(5) Frequency
27.7kHz to 75kHz (typ.)
(6) Operating temperature range ..–30°C to +85°C
(7) Protective function
Vcc over voltage, External latch protection, soft-start, Over current, CS-pin OPEN
(8) Light load burst operation
(9) PFC circuit control function (AC detection, Load detection)

Pin assignment

SOP-10A

(Top view)

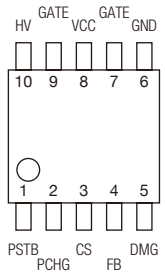

Pin no.	Function
1	PFC Circuit Drive (Power supply)
2	PFC Circuit Output-Voltage Change
3	Current Detection
4	Feedback Detection
5	Zero-Cross Detection
6	GND
7	External MOS drive
8	Power supply
9	No Connection
10	High Voltage Startup

Downloaded from Arrow.com.

Block diagram

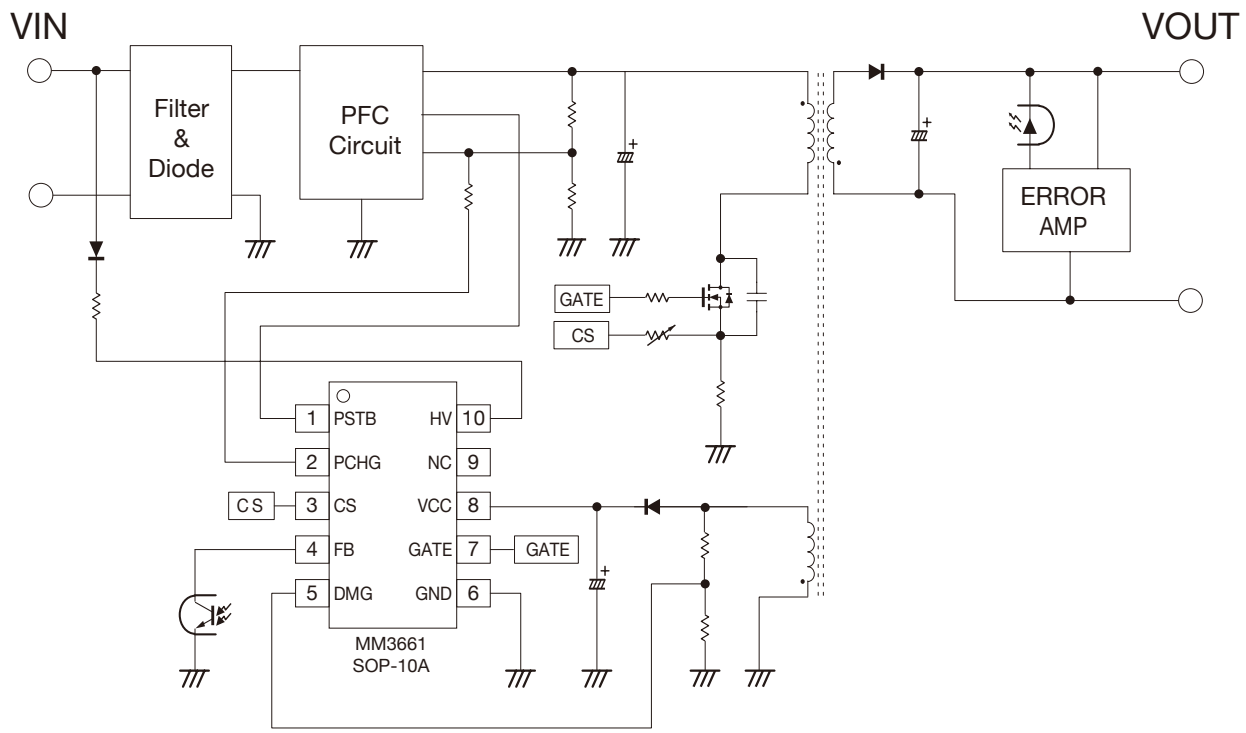

Efficiency characteristic

Light load detection

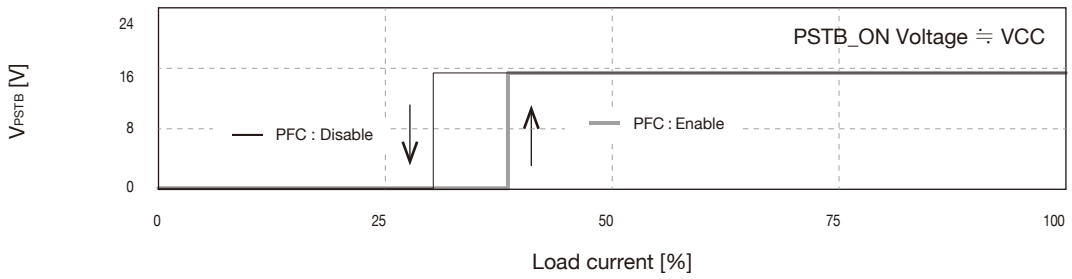

AC detection

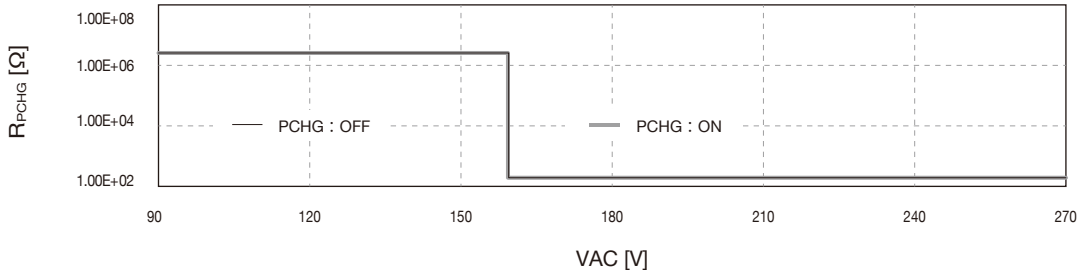

Downloaded from Arrow.com.

2 POWER SUPPLY ICs

Secondary-side synchronouse rectifier for QR/LLC

MM3667 series

Outline

MM3667AF is secondary side synchronous rectification control IC to drive MOSFETs in isolated AC-DC converter.
It is able to achieve very high efficiency by replacing secondary rectifier diode with power MOSFET and MM3667.
It is effective for the miniaturization of the power supply by decreasing of heat generation.
MM3667 controls Turn-ON/OFF of MOSFET by detecting only secondary signals.
MM3667 has standby mode. Using this mode, the standby power requirement is able to be suppressed to low.

Features (Unless otherwise specified, Ta=+25°C)

(1) Supply voltage ..... 6.0V to 15.0V
(2) Gate drive voltage ..... 6.0V to 15.0V
(Equal to VCC)
(3) Turn-OFF threshold voltage ..... Variable
(4) OFF timming detect ..... Drain voltage detecting.
(5) Equipped with standby mode

Applications

(1) LCD-TV
(2) Gaming consoles
(3) AC Adapter
(4) Switching power supply

Pin assignment

■SOP-8J (MM3667A)

(Top view)

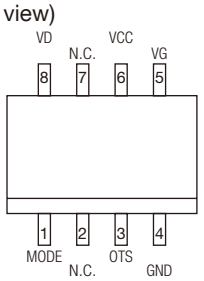

Pin no.	Function
1	Operation mode setting / Internal parameter setting
2	N.C.
3	Turn-Off threshold setting / Standby detection
4	Ground / MOSFET source connect
5	Gate driver output
6	IC and gate driver power supply input
7	N.C.
8	MOSFET drain voltage detection

■SOP-8J (MM3667B)

(Top view)

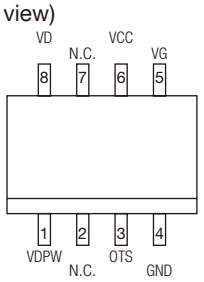

Pin no.	Function
1	VDPW setting / Stanby mode detection
2	N.C.
3	Turn-Off threshold setting
4	Ground / MOSFET source connect
5	Gate driver output
6	IC and gate driver power supply input
7	N.C.
8	MOSFET drain voltage detection

Lineup

Product name	Supports	Frequency	minimum on-time setting	VDPW setting range	Stanby mode detectoin terminal
MM3667A	Half-Bridge LLC resonant Quasi-Resonant flyback.	~ 500kHz (LLC) ~ 200kHz (QR)	External resistor	0.29μs to 1.71μs	OTS
MM3667B	Quasi-Resonant flyback.	~170kHz (QR)	Built-in	0.48 to 3.35μs	VDPW

Downloaded from Arrow.com.

Performance characteristics

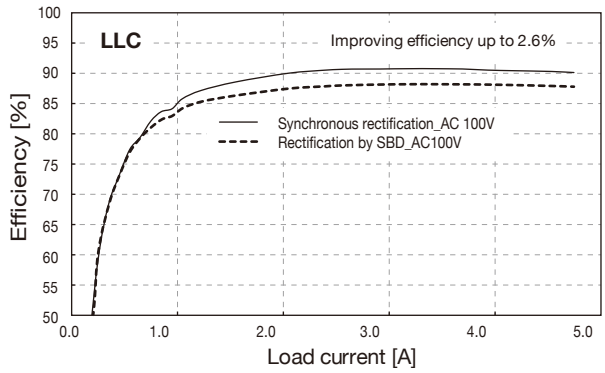

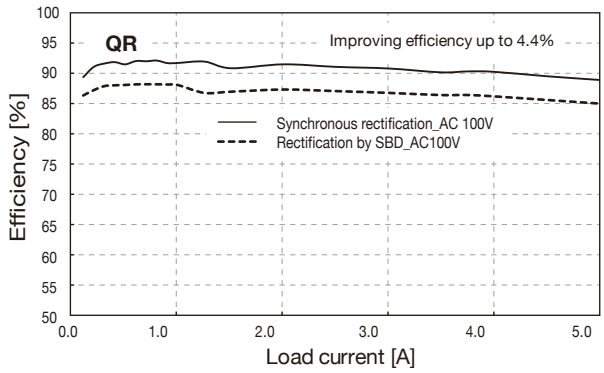

Application circuit

For QR

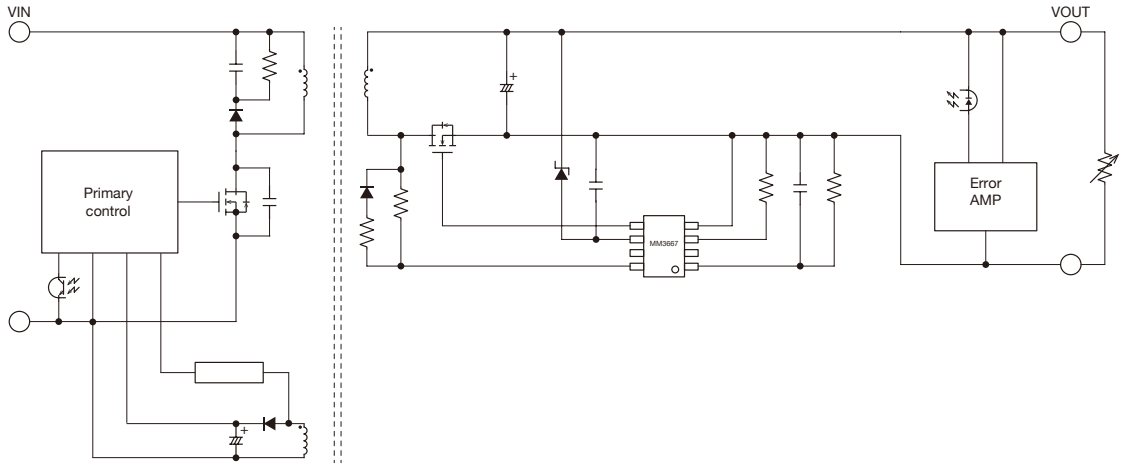

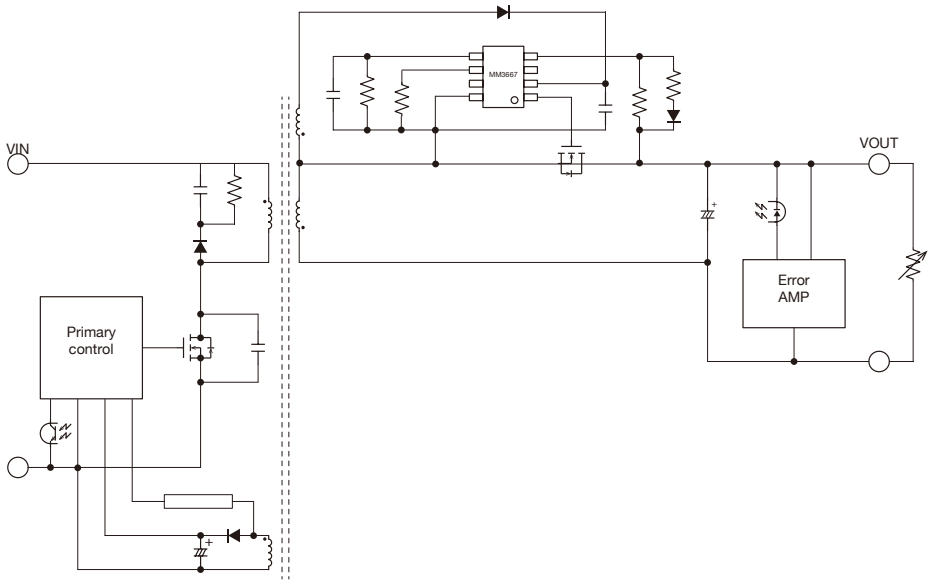

Downloaded from Arrow.com.

Application circuit

For LLC

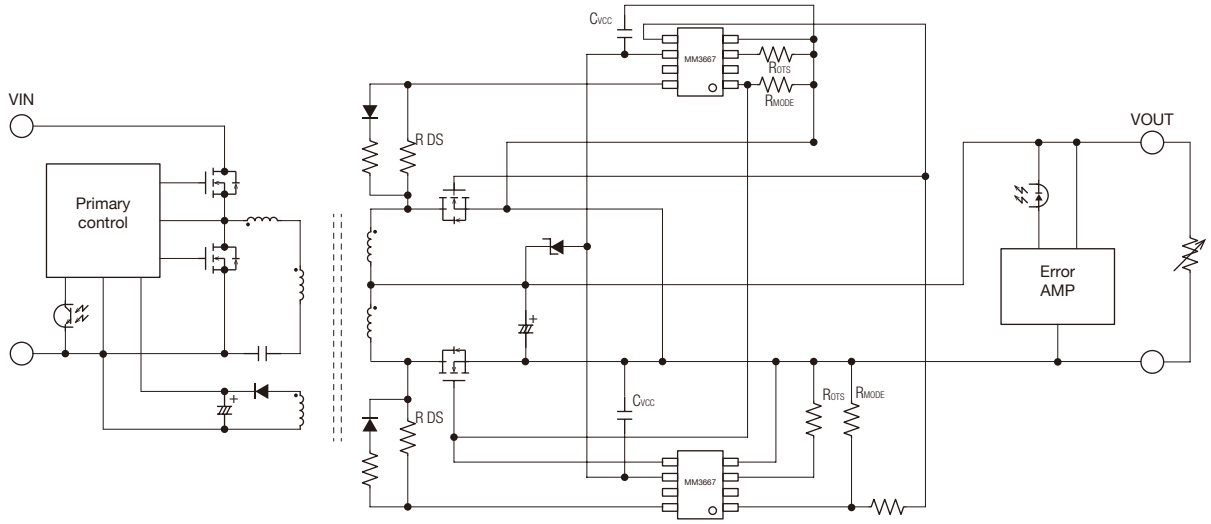

Downloaded from Arrow.com.

2 POWER SUPPLY ICs

The synchronos rectification control IC for AC-DC converter

MM3473

Outline

This IC is secondary side driver IC for the isolated flyback converters. Replace secondary SBD rectifer with synchronous rectifer by the IC, efficiency will be improved.
It is possible to correspond to various efficiency restrictions. Also an effective miniaturization of the power supply by the heat-sink reduction and so on.
The control of MOSFET is decided by detecting VDS. MOSFET Turned-off is set by external resistor. So the IC is available for various power supplies.
In addition, it is equipped with a standby mode and can hold down standby power low.
Uses SOP-8D package and supports flow conditions.

Features (Unless otherwise specified, Ta=+25°C)

(1) Supply voltage ..... 8.0V to 28V
(2) Switching Frequency..... 25 K to 200 KHz
(3) It is possible to correspond to the burst mode.
(4) An off threshold voltage can be set with external parts.
(5) High-speed switching of gate voltage of MOSFET
(6) Equipped with standby mode

Applications

(1) The flyback converter
(2) Quasi-resonant converter
(3) Others

Pin assignment

SOP-8D

(Top view)

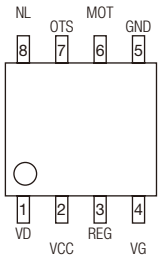

Pin no.	Function
1	FET drain sensing
2	IC power input
3	Reference voltage output
4	FET's Gate voltage output
5	Ground
6	Minimum On-time setting
7	Off threshold setting
8	No load mode sensing

Downloaded from Arrow.com.

Block diagram

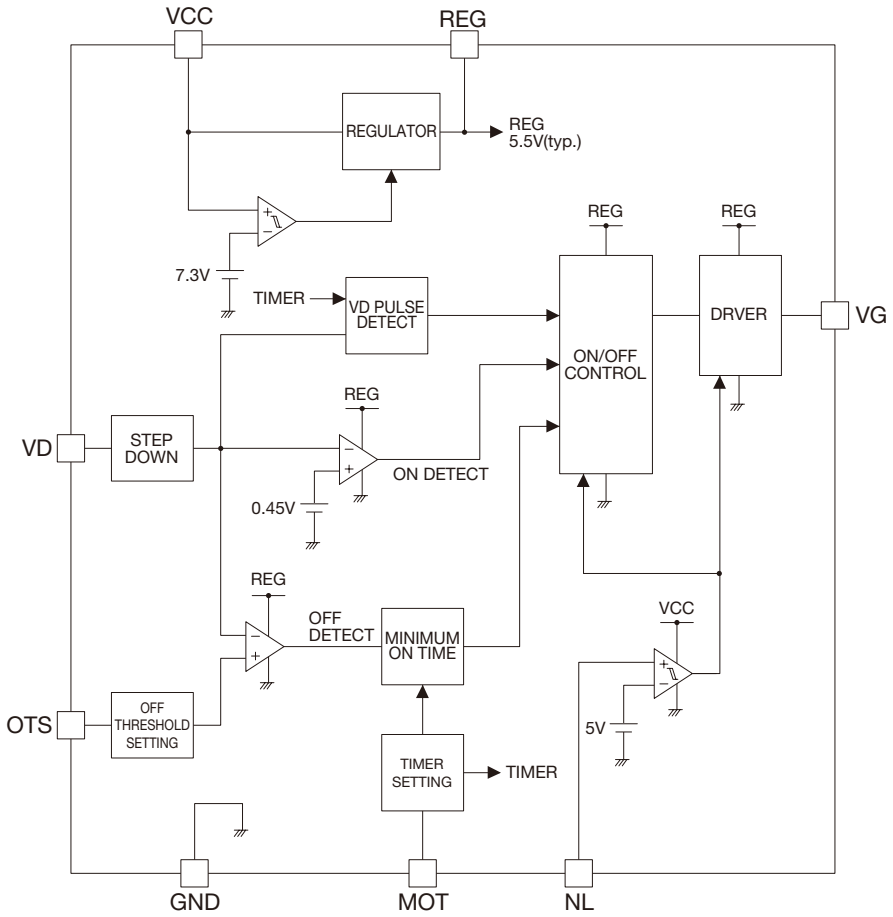

Typical application circuit

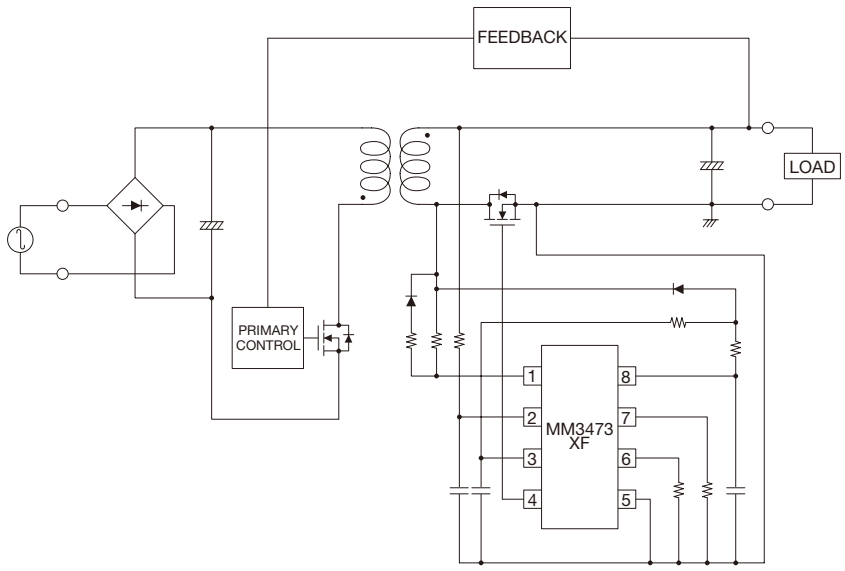

caution:
The above circuit shows one example of connection of this IC.
Constants of the best wiring and parts in the surrounding are different depending on the specification of the power supply. Please use the IC after it examines it enough.

Downloaded from Arrow.com.

White LED driver IC

MM3097

Outline

This IC is a white LED driver IC.
It is a boost DC-DC converter IC designed to drive up to 7 LEDs and suitable for backlight drivers.
Feedback voltage is as low as 95mV, which can reduce power consumption in a current set resistor.
A small 0.22µF capacitor can be used, so that not only space but costs can be reduced.

Features (Unless otherwise specified, Ta=+25°C)

(1) Enables to drive up to 7 white LEDs in a series connection
(2) Input voltage range .....2.5V to 6.0V
(3) Shutdown current.....0.1µA typ.
(4) High efficiency.....85% typ.
(5) Luminance control.....PWM system
(6) Feedback voltage.....95mV

Applications

(1) Smart phones, Mobile phones
(2) Digital video cameras
(3) Digital still cameras
(4) Portable games
(5) Tablet PCs

Pin assignment

SOT-25A

(Top view)

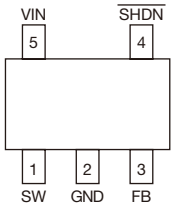

Pin no.	function
1	Switch
2	Ground
3	Feed back
4	Shut down
5	IC power input

Downloaded from Arrow.com.

Block diagram

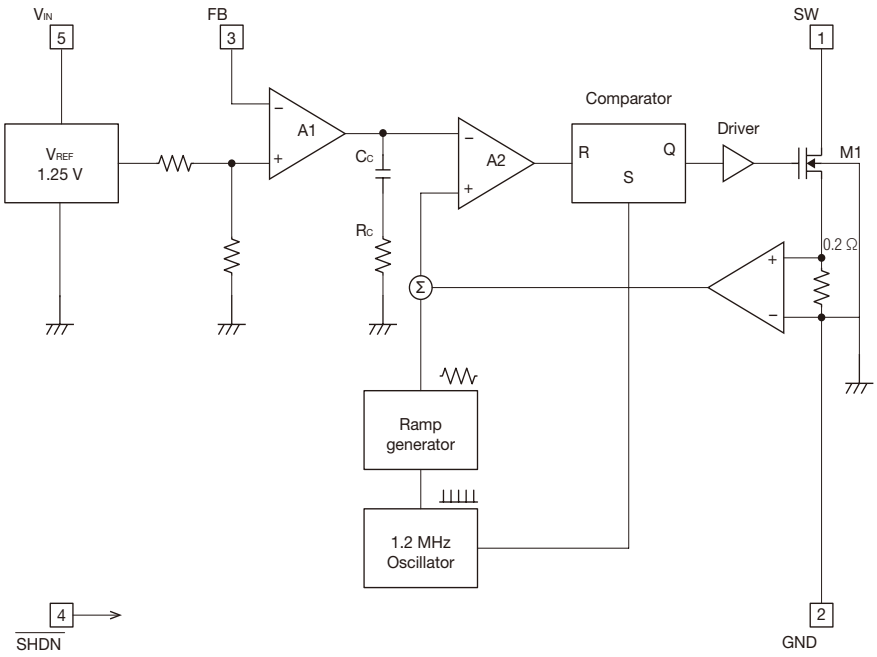

Typical application circuit

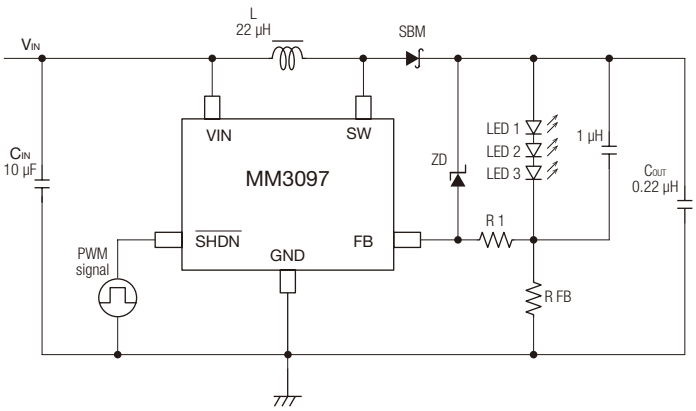

Downloaded from Arrow.com.

Triac dimmer power control for LED lighting

MM3760

Outline

MM3760 LED Lighting power supply IC is corresponding to the TRIAC dimming,
PWM dimming and DC dimming.
It adopts a quasi resonant switching, and has realized the low loss and low noise.
This IC is realized non-linear current curve by combination of peak current control and OFF-time variable control, thereby it to allow visually smooth dimming curve.
And equipped with output terminal of phase detector for bleeder current control, it to allow reduce parts.

Applications

(1) Downlight
(2) Power supply input

Features (Unless otherwise specified, Ta=+25°C)

(1) Supported Phase / PWM / DC dimming
(2) Low loss and low noise by Quasi resonant switching
(3) Smooth dimming by combination of peak current control and OFF-time variable control.
(4) Equipped with OUTPUT of phase detector for bleeder current control
(5) Equipped with Minimum current clamp function
(6) Corresponding to Hotal switch
(Parallel connection of up to five)
(7) Equipped with various protect function
(OCP, SWP, UVLO, TSD, ISNS terminal open protection)
(8) Operating voltage range.....10 to 25.5V
(9) Current consumption .....3.5mA(Typ.)
(10) Load resistance for Hotal switch .....10KΩ(Typ.)
(11) Maximun ISNS detect voltage.....0.6V(Typ.)
(12) Over current detect voltage.....0.8V(Typ.)
(13) Short winding protection detect voltage .....2.5V(Typ.)

Pin assignment

■SOP-10A

(Top view)

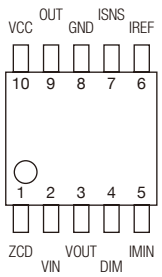

Pin no.	Function
1	Zero-current detect
2	Phase detect Input
3	Phase detect Outpu
4	Light dimming
5	Mnimum LED current control
6	LED current sensing reference voltage
7	LED current sensing
8	GND
9	Gate drive
10	Power supply input

Downloaded from Arrow.com.

Application circuit

Typical LED driver circuit using MM3760. (TRICA dimming / buck converter).

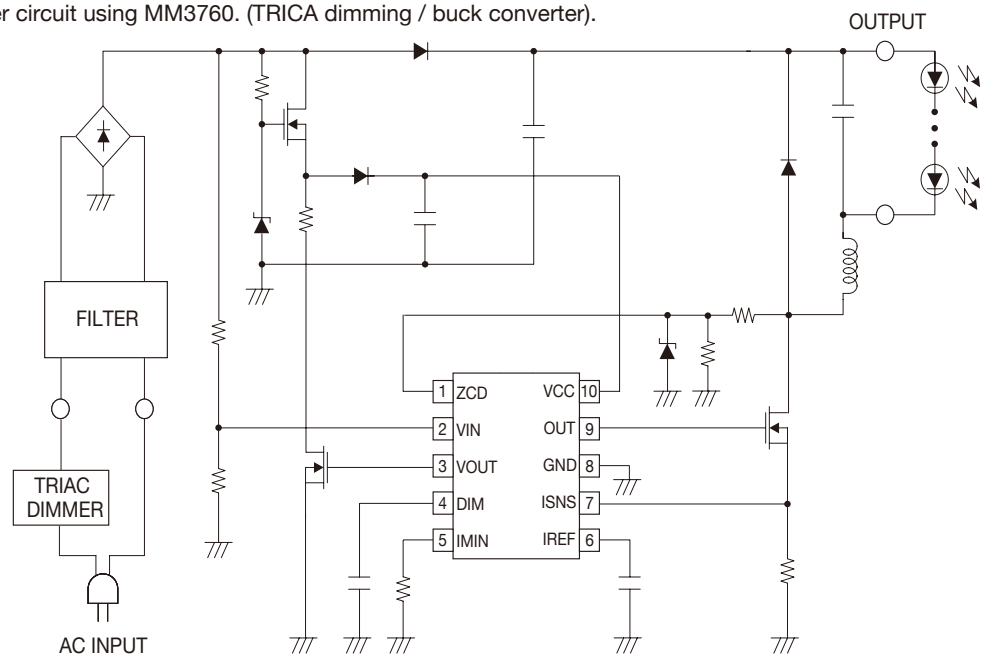

Dimming characteristic

Right Graph is example of LED light using MM3760.
Horizontal axis is Phase of TRIAC dimmer, and vertical axis is LED-current.
To allow visually smooth dimming curve by non-linear current curve of "Area(1)".
Operation of each area is determined by the peak current control and OFF-time variable control.

(1) Peak& OFF-time variable area
LED-current is determined by peak current control and OFF-time variable control.
(2) Area of peak current control
LED-current is determined by peak current control only.
(3) Peak fixed area

LED-current is fixed Max.
Under diagram is Waveform of each area.
VDS : Drain voltage OUT : Gate drive terminal voltage IL : Inductor current

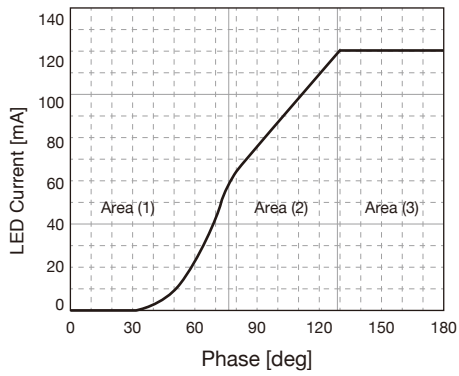

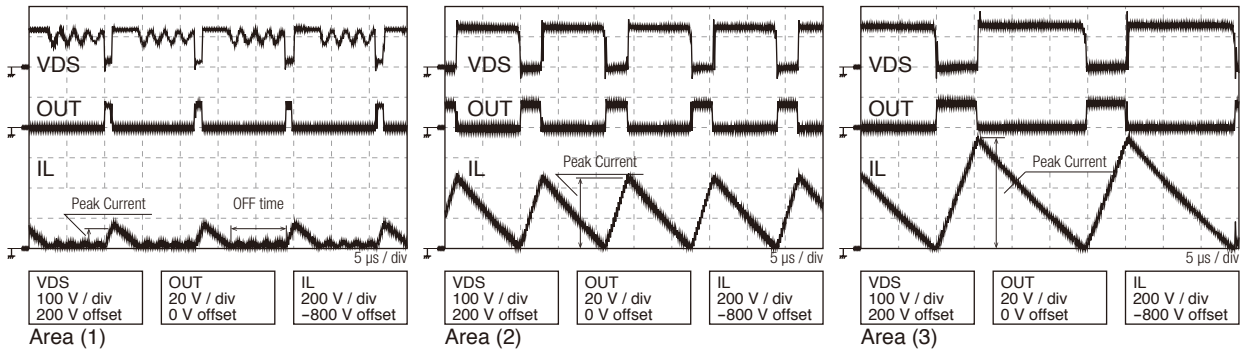

Downloaded from Arrow.com.

PFC switching power control IC for LED lights

MM3460+MM1837

Outline

This IC is a PFC (Power Factor Correction) switching power control IC for LED lights.
Steady current and steady voltage application for LED lights can be achieved by using MM3460 for primary-side and MM1837 (operational amplifier and shunt regulator) for secondary side.
It uses a one-converter system into which a PFC circuit and an AC-DC converter become integrated. Compared to a regular two-converter, a high-efficient power supply circuit can be achieved due to reduction in the number of parts and little power loss. In addition, as a protection circuit, it has internal input low voltage and overvoltage protection, output overvoltage with delay and a short protection circuit.
Moreover, the consumption of start-up current and current during operation are lowered for low standby mode electricity.

Applications

(1) LED lighting devices
(2) LED bulbs
(3) Other power supplies

Features (Unless otherwise specified, Ta=+25°C)

■MM3460XFBE

(1) Limits for harmonic current emissions (one-converter system)
(2) PF=0.99 (reference value)
(3) High efficiency: 88% (reference value, at rated load)
(4) Reduction in the number of parts by not using an active filter (PFC) control circuit
Longer life can be achieved by not using the primary electrolytic capacitor
(5) Electrical characteristics

- High voltage input 28V
- LED output : ..... 5W to 60W
- Critical conduction current mode
- Built-in input UVLO, overvoltage protection (28V Zener) circuits
- Built-in output (FB) short, overvoltage protection circuits (with a delay feature)
  *This Function is original protection
- Start-up current (30μA typ.), current during operation (1mA typ.)

■MM1837XFBE

(1) Dual op-amp and shunt regulator
(2) Electrical characteristics

- Input offset voltage..... 0.2mV typ.
- Input offset current ..... 5nA typ.
- Reference voltage of shunt regulator ..... 2.5V typ.
- Reference voltage deviation..... 5mV typ. (-20°C to +80°C)
- Minimum cathode current ..... 0.4mA typ.

Downloaded from Arrow.com.

Pin assignment

SOP-8D (MM3460XFBE)

(Top view)

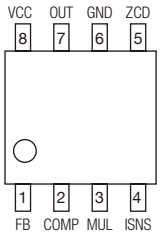

Pin no.	Symbol	Function
1	FB	Secondary side voltage feedback input pin.
2	COMP	Error amplifier output pin
3	MUL	AC voltage input pin
4	ISNS	Inductor current detection input pin
5	ZCD	Zero current detection pin
6	GND	Ground
7	OUT	Gate drive pin
8	VCC	IC supply voltage pin

SOP-8C (MM1837XFBE)

(Top view)

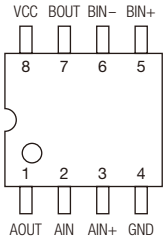

Pin no.	Symbol	Function
1	AOUT	A OUTPUT
2	AIN-	A INPUT-
3	AIN+	A INPUT+
4	GND	GND
5	BIN+	B INPUT+
6	BIN-	B INPUT-
7	BOUT	B OUTPUT
8	VCC	IC supply voltage pin

Downloaded from Arrow.com.

Typical application circuit

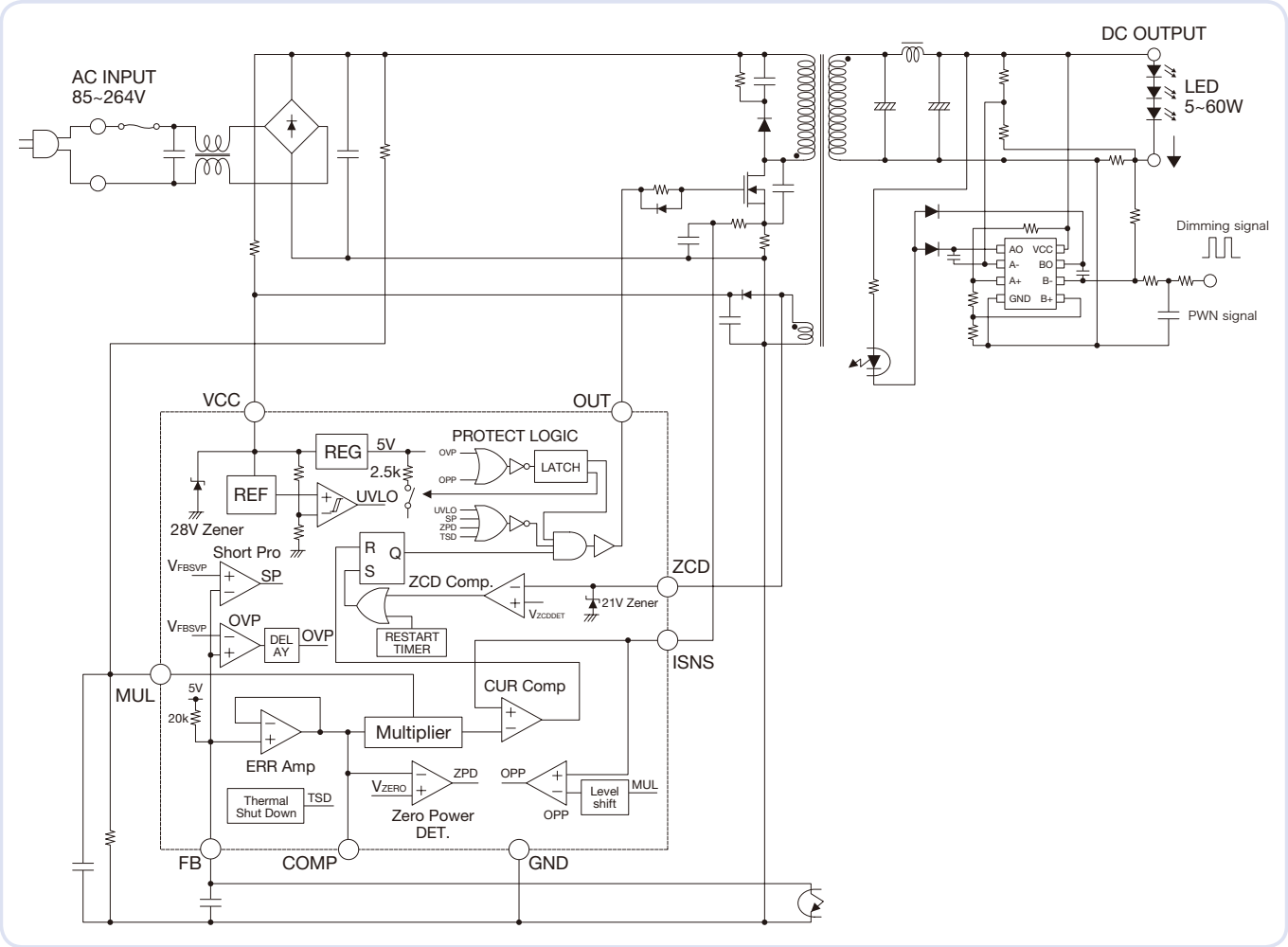

Dimmer control function

- Steady current control for LED current is run on secondary side control circuit (MM1837).
- PWM dimmer method is used for dimmer control.
- Dimmer signal changes PWM to DC using outside filter. Then, it is used as a reference voltage for secondary side control IC.

* Phase control dimmer is not supported for MM3460 by itself.

Downloaded from Arrow.com.

Downloaded from Arrow.com.

2 RESET IC

Electrical characteristics

(Unless otherwise specified, Ta=+25°C)

Product series	Product name	Rank of detection voltage (Typ.)	Detection voltage accuracy	Operating voltage	Current consumption (typ.)	Output type	Delay time	Packages
No delay function (Standard)	PST81xx series	0.8V to 6.0V	±0.5% (2.0 to 6.0V) ±0.8% (0.8 to 1.9V)	0.70V to 10.0V	0.25μA	CMOS output active low	–	SC-82ABB SOT-25A SSON-4B
	PST82xx series	0.8V to 6.0V	±0.5% (2.0 to 6.0V) ±0.8% (0.8 to 1.9V)	0.70V to 10.0V	0.25μA	Open drain output active low	–	SC-82ABB SOT-25A SSON-4B
	PST86xx series NEW	1.2V to 5.2V	±10%	0.95V to 6.5V	0.25μA	Open drain output active low	–	SC-82ABB SOT-25A
Separated sense line	PST851xx series PST852xx series	0.8V to 6.0V	±0.5% (2.0 to 6.0V) ±0.8% (0.8 to 1.9V)	0.70V to 10.0V	0.35μA	CMOS output open drain output active low	–	SC-82ABB SOT-25A SSON-4B
Delay function included (External capacitor)	PST83xx series	0.8V to 6.0V	±0.5% (2.0 to 6.0V) ±0.8% (0.8 to 1.9V)	0.70V to 10.0V	0.35μA	CMOS output active low	External	SC-82ABB SOT-25A SSON-4B
	PST84xx series	0.8V to 6.0V	±0.5% (2.0 to 6.0V) ±0.8% (0.8 to 1.9V)	0.70 to 10.0V	0.35μA	Open drain output active low	External	SC-82ABB SOT-25A SSON-4B
	PST893A series PST894A series NEW	1.2V to 5.2V	±10%	0.95V to 6.5V	0.35μA	CMOS output open drain output active low	External	SC-82ABB SOT-25A PLP-4A
	PST893B series PST894B series NEW	1.2V to 5.2V	±10%	0.95V to 6.5V	0.35μA	CMOS output open drain output active low	External	SC-82ABB SOT-25A
Built-in delay function	PST87xx series	1.6V to 4.6V	±1.5%	1.0V to 5.5V	1.0μA	CMOS output active low	Built-in	SC-82ABB SOT-25A SSON-4B
	PST88xx series	1.6V to 4.6V	±1.5%	1.0V to 5.5V	1.0μA	Open drain output active low	Built-in	SC-82ABB SOT-25A SSON-4B
	PST803xx series PST805xx series	1.6V to 5.0V	±1.0%	1.0V to 6.0V	0.5μA	Open drain output active low	Built-in	SOT-23A
	PST804xx series PST806xx series	1.6V to 5.0V	±1.0%	1.0V to 6.0V	0.5μA	Open drain output active high	Built-in	SOT-23A
	PST807xx series PST809xx series	1.6V to 5.0V	±1.0%	1.0V to 6.0V	0.5μA	CMOS output active low	Built-in	SOT-23A
	PST808xx series PST810xx series	1.6V to 5.0V	±1.0%	1.0V to 6.0V	0.5μA	CMOS output active high	Built-in	SOT-23A

Downloaded from Arrow.com.

2 RESET IC

High accuracy CMOS system reset

PST81XX / PST82XX Series

Outline

This IC functions in a variety of CPU systems and other logic systems, to detect supply voltage and reset the system accurately when the power is turned on or interrupted.
To ±1.5% of detection voltage accuracy of the conventional models, a maximum of ±0.5% of super-high precision is realized, and it is more suitable for battery detection etc. Moreover, the mounting area significantly contributes to space saving using the SSON package.

Features (Unless otherwise specified, Ta=+25°C)

(1) High Accuracy ..... ±0.5% typ. / 2.0 to 6.0V
±0.8% typ. / 0.8 to 1.9V
(2) Ultra-low current consumption . 0.25μA typ.
(3) Ultra-small package ..... 1.10×1.40mm(SSON-4B)
(4) Operating temperature range ... −40°C to +105°C
(5) Detecting voltage rank ..... 0.8V to 6.0V(0.1V step)
(6) Output configuration ..... PST81XX series :CMOS output
PST82XX series :Open drain output

Applications

(1) Reset circuits for microcomputers, CPUs and MPUs
(2) Reset circuits for logic circuit
(3) Battery voltage check circuit
(4) Back-up power supply switching circuit
(5) Level detection circuit

Pin assignment

SOT-25A

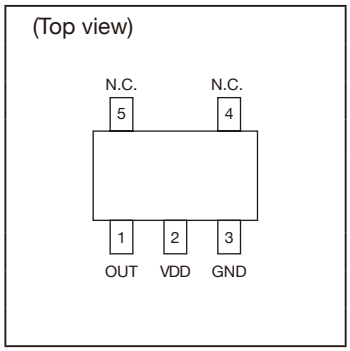

SC-82ABB

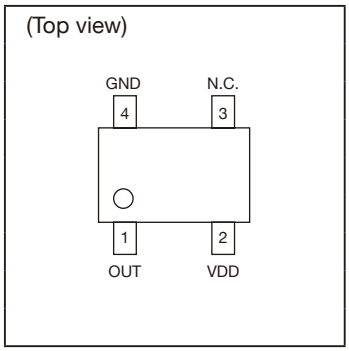

SSON-4B

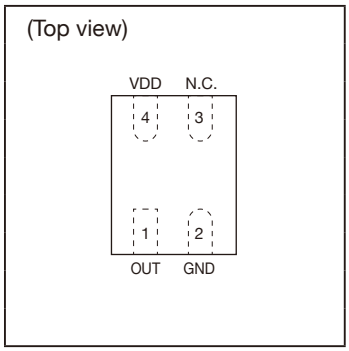

Model name structure

P S T 8 1 □ □ □ R
P S T 8 2 □ □ □ R

Housing	L R
Package code	
SC-82ABB	U
SOT-25A	N
SSON-4B	R
Output voltage	
e.g.) 2.8V	28
PST81	CMOS output
PST82	Open drain output

Downloaded from Arrow.com.

Selection guide

Detection Voltage	Accuracy	Reset Threshold Hysteresis (typ.)	CMOS output		
			SOT-25A Package (3,000pcs/Reel)	SC-82ABB Package (3,000pcs/Reel)	SSON-4B Package (3,000pcs/Reel)
0.8V	±0.8%	0.040V	IC-PST8108NR	IC-PST8108UR	IC-PST8108RL
0.9V	±0.8%	0.045V	IC-PST8109NR	IC-PST8109UR	IC-PST8109RL
1.0V	±0.8%	0.050V	IC-PST8110NR	IC-PST8110UR	IC-PST8110RL
1.1V	±0.8%	0.055V	IC-PST8111NR	IC-PST8111UR	IC-PST8111RL
1.2V	±0.8%	0.060V	IC-PST8112NR	IC-PST8112UR	IC-PST8112RL
1.3V	±0.8%	0.065V	IC-PST8113NR	IC-PST8113UR	IC-PST8113RL
1.4V	±0.8%	0.070V	IC-PST8114NR	IC-PST8114UR	IC-PST8114RL
1.5V	±0.8%	0.075V	IC-PST8115NR	IC-PST8115UR	IC-PST8115RL
1.6V	±0.8%	0.080V	IC-PST8116NR	IC-PST8116UR	IC-PST8116RL
1.7V	±0.8%	0.085V	IC-PST8117NR	IC-PST8117UR	IC-PST8117RL
1.8V	±0.8%	0.090V	IC-PST8118NR	IC-PST8118UR	IC-PST8118RL
1.9V	±0.8%	0.095V	IC-PST8119NR	IC-PST8119UR	IC-PST8119RL
2.0V	±0.5%	0.100V	IC-PST8120NR	IC-PST8120UR	IC-PST8120RL
2.1V	±0.5%	0.105V	IC-PST8121NR	IC-PST8121UR	IC-PST8121RL
2.2V	±0.5%	0.110V	IC-PST8122NR	IC-PST8122UR	IC-PST8122RL
2.3V	±0.5%	0.115V	IC-PST8123NR	IC-PST8123UR	IC-PST8123RL
2.4V	±0.5%	0.120V	IC-PST8124NR	IC-PST8124UR	IC-PST8124RL
2.5V	±0.5%	0.125V	IC-PST8125NR	IC-PST8125UR	IC-PST8125RL
2.6V	±0.5%	0.130V	IC-PST8126NR	IC-PST8126UR	IC-PST8126RL
2.7V	±0.5%	0.135V	IC-PST8127NR	IC-PST8127UR	IC-PST8127RL
2.8V	±0.5%	0.140V	IC-PST8128NR	IC-PST8128UR	IC-PST8128RL
2.9V	±0.5%	0.145V	IC-PST8129NR	IC-PST8129UR	IC-PST8129RL
3.0V	±0.5%	0.150V	IC-PST8130NR	IC-PST8130UR	IC-PST8130RL
3.1V	±0.5%	0.155V	IC-PST8131NR	IC-PST8131UR	IC-PST8131RL
3.2V	±0.5%	0.160V	IC-PST8132NR	IC-PST8132UR	IC-PST8132RL
3.3V	±0.5%	0.165V	IC-PST8133NR	IC-PST8133UR	IC-PST8133RL
3.4V	±0.5%	0.170V	IC-PST8134NR	IC-PST8134UR	IC-PST8134RL
3.5V	±0.5%	0.175V	IC-PST8135NR	IC-PST8135UR	IC-PST8135RL
3.6V	±0.5%	0.180V	IC-PST8136NR	IC-PST8136UR	IC-PST8136RL
3.7V	±0.5%	0.185V	IC-PST8137NR	IC-PST8137UR	IC-PST8137RL
3.8V	±0.5%	0.190V	IC-PST8138NR	IC-PST8138UR	IC-PST8138RL
3.9V	±0.5%	0.195V	IC-PST8139NR	IC-PST8139UR	IC-PST8139RL
4.0V	±0.5%	0.200V	IC-PST8140NR	IC-PST8140UR	IC-PST8140RL
4.1V	±0.5%	0.205V	IC-PST8141NR	IC-PST8141UR	IC-PST8141RL
4.2V	±0.5%	0.210V	IC-PST8142NR	IC-PST8142UR	IC-PST8142RL
4.3V	±0.5%	0.215V	IC-PST8143NR	IC-PST8143UR	IC-PST8143RL
4.4V	±0.5%	0.220V	IC-PST8144NR	IC-PST8144UR	IC-PST8144RL
4.5V	±0.5%	0.225V	IC-PST8145NR	IC-PST8145UR	IC-PST8145RL
4.6V	±0.5%	0.230V	IC-PST8146NR	IC-PST8146UR	IC-PST8146RL
4.7V	±0.5%	0.235V	IC-PST8147NR	IC-PST8147UR	IC-PST8147RL
4.8V	±0.5%	0.240V	IC-PST8148NR	IC-PST8148UR	IC-PST8148RL
4.9V	±0.5%	0.245V	IC-PST8149NR	IC-PST8149UR	IC-PST8149RL
5.0V	±0.5%	0.250V	IC-PST8150NR	IC-PST8150UR	IC-PST8150RL
5.1V	±0.5%	0.255V	IC-PST8151NR	IC-PST8151UR	IC-PST8151RL
5.2V	±0.5%	0.260V	IC-PST8152NR	IC-PST8152UR	IC-PST8152RL
5.3V	±0.5%	0.265V	IC-PST8153NR	IC-PST8153UR	IC-PST8153RL
5.4V	±0.5%	0.270V	IC-PST8154NR	IC-PST8154UR	IC-PST8154RL
5.5V	±0.5%	0.275V	IC-PST8155NR	IC-PST8155UR	IC-PST8155RL
5.6V	±0.5%	0.280V	IC-PST8156NR	IC-PST8156UR	IC-PST8156RL
5.7V	±0.5%	0.285V	IC-PST8157NR	IC-PST8157UR	IC-PST8157RL
5.8V	±0.5%	0.290V	IC-PST8158NR	IC-PST8158UR	IC-PST8158RL
5.9V	±0.5%	0.295V	IC-PST8159NR	IC-PST8159UR	IC-PST8159RL
6.0V	±0.5%	0.300V	IC-PST8160NR	IC-PST8160UR	IC-PST8160RL

Downloaded from Arrow.com.

Selection guide

Detection Voltage	Accuracy	Reset Threshold Hysteresis (typ.)	CMOS output		
			SOT-25A Package (3,000pcs/Reel)	SC-82ABB Package (3,000pcs/Reel)	SSON-4B Package (3,000pcs/Reel)
0.8V	±0.8%	0.040V	IC-PST8208NR	IC-PST8208UR	IC-PST8208RL
0.9V	±0.8%	0.045V	IC-PST8209NR	IC-PST8209UR	IC-PST8209RL
1.0V	±0.8%	0.050V	IC-PST8210NR	IC-PST8210UR	IC-PST8210RL
1.1V	±0.8%	0.055V	IC-PST8211NR	IC-PST8211UR	IC-PST8211RL
1.2V	±0.8%	0.060V	IC-PST8212NR	IC-PST8212UR	IC-PST8212RL
1.3V	±0.8%	0.065V	IC-PST8213NR	IC-PST8213UR	IC-PST8213RL
1.4V	±0.8%	0.070V	IC-PST8214NR	IC-PST8214UR	IC-PST8214RL
1.5V	±0.8%	0.075V	IC-PST8215NR	IC-PST8215UR	IC-PST8215RL
1.6V	±0.8%	0.080V	IC-PST8216NR	IC-PST8216UR	IC-PST8216RL
1.7V	±0.8%	0.085V	IC-PST8217NR	IC-PST8217UR	IC-PST8217RL
1.8V	±0.8%	0.090V	IC-PST8218NR	IC-PST8218UR	IC-PST8218RL
1.9V	±0.8%	0.095V	IC-PST8219NR	IC-PST8219UR	IC-PST8219RL
2.0V	±0.5%	0.100V	IC-PST8220NR	IC-PST8220UR	IC-PST8220RL
2.1V	±0.5%	0.105V	IC-PST8221NR	IC-PST8221UR	IC-PST8221RL
2.2V	±0.5%	0.110V	IC-PST8222NR	IC-PST8222UR	IC-PST8222RL
2.3V	±0.5%	0.115V	IC-PST8223NR	IC-PST8223UR	IC-PST8223RL
2.4V	±0.5%	0.120V	IC-PST8224NR	IC-PST8224UR	IC-PST8224RL
2.5V	±0.5%	0.125V	IC-PST8225NR	IC-PST8225UR	IC-PST8225RL
2.6V	±0.5%	0.130V	IC-PST8226NR	IC-PST8226UR	IC-PST8226RL
2.7V	±0.5%	0.135V	IC-PST8227NR	IC-PST8227UR	IC-PST8227RL
2.8V	±0.5%	0.140V	IC-PST8228NR	IC-PST8228UR	IC-PST8228RL
2.9V	±0.5%	0.145V	IC-PST8229NR	IC-PST8229UR	IC-PST8229RL
3.0V	±0.5%	0.150V	IC-PST8230NR	IC-PST8230UR	IC-PST8230RL
3.1V	±0.5%	0.155V	IC-PST8231NR	IC-PST8231UR	IC-PST8231RL
3.2V	±0.5%	0.160V	IC-PST8232NR	IC-PST8232UR	IC-PST8232RL
3.3V	±0.5%	0.165V	IC-PST8233NR	IC-PST8233UR	IC-PST8233RL
3.4V	±0.5%	0.170V	IC-PST8234NR	IC-PST8234UR	IC-PST8234RL
3.5V	±0.5%	0.175V	IC-PST8235NR	IC-PST8235UR	IC-PST8235RL
3.6V	±0.5%	0.180V	IC-PST8236NR	IC-PST8236UR	IC-PST8236RL
3.7V	±0.5%	0.185V	IC-PST8237NR	IC-PST8237UR	IC-PST8237RL
3.8V	±0.5%	0.190V	IC-PST8238NR	IC-PST8238UR	IC-PST8238RL
3.9V	±0.5%	0.195V	IC-PST8239NR	IC-PST8239UR	IC-PST8239RL
4.0V	±0.5%	0.200V	IC-PST8240NR	IC-PST8240UR	IC-PST8240RL
4.1V	±0.5%	0.205V	IC-PST8241NR	IC-PST8241UR	IC-PST8241RL
4.2V	±0.5%	0.210V	IC-PST8242NR	IC-PST8242UR	IC-PST8242RL
4.3V	±0.5%	0.215V	IC-PST8243NR	IC-PST8243UR	IC-PST8243RL
4.4V	±0.5%	0.220V	IC-PST8244NR	IC-PST8244UR	IC-PST8244RL
4.5V	±0.5%	0.225V	IC-PST8245NR	IC-PST8245UR	IC-PST8245RL
4.6V	±0.5%	0.230V	IC-PST8246NR	IC-PST8246UR	IC-PST8246RL
4.7V	±0.5%	0.235V	IC-PST8247NR	IC-PST8247UR	IC-PST8247RL
4.8V	±0.5%	0.240V	IC-PST8248NR	IC-PST8248UR	IC-PST8248RL
4.9V	±0.5%	0.245V	IC-PST8249NR	IC-PST8249UR	IC-PST8249RL
5.0V	±0.5%	0.250V	IC-PST8250NR	IC-PST8250UR	IC-PST8250RL
5.1V	±0.5%	0.255V	IC-PST8251NR	IC-PST8251UR	IC-PST8251RL
5.2V	±0.5%	0.260V	IC-PST8252NR	IC-PST8252UR	IC-PST8252RL
5.3V	±0.5%	0.265V	IC-PST8253NR	IC-PST8253UR	IC-PST8253RL
5.4V	±0.5%	0.270V	IC-PST8254NR	IC-PST8254UR	IC-PST8254RL
5.5V	±0.5%	0.275V	IC-PST8255NR	IC-PST8255UR	IC-PST8255RL
5.6V	±0.5%	0.280V	IC-PST8256NR	IC-PST8256UR	IC-PST8256RL
5.7V	±0.5%	0.285V	IC-PST8257NR	IC-PST8257UR	IC-PST8257RL
5.8V	±0.5%	0.290V	IC-PST8258NR	IC-PST8258UR	IC-PST8258RL
5.9V	±0.5%	0.295V	IC-PST8259NR	IC-PST8259UR	IC-PST8259RL
6.0V	±0.5%	0.300V	IC-PST8260NR	IC-PST8260UR	IC-PST8260RL

Downloaded from Arrow.com.

2 RESET IC

CMOS system reset IC

PST86XX Series

Outline

This IC is a reset IC for turning on/off power supply and power flicker in CPU or logic systems.
The IC applies to the small battery(Li-ion,Li-pol) equipment by high accuracy ±1.0%. and low supply current 0.25µA typ.
PST86XX is compatible with PST82XX.

Applications

(1) Reset circuits for microcomputers, CPUs and MPUs
(2) Reset circuits for logic circuit
(3) Battery voltage check circuit
(4) Back-up power supply switching circuit
(5) Level detection circuit

Features (Unless otherwise specified, Ta=+25°C)

(1) High Accuracy..... ±1.0% typ.
(2) Ultra-low current consumption.... 0.25µA typ.
(3) Operating-voltage range ..... 0.95V to 6.5V
(4) Operating temperature range ... −40°C to +105°C
(5) Detecting voltage rank ..... 1.2V to 5.2V (0.1Vstep)
(6) Output configuration ..... Open drain output

Pin assignment

SOT-25A

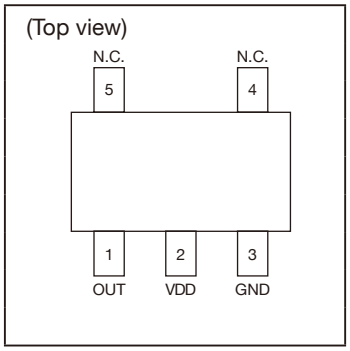

SC-82ABB

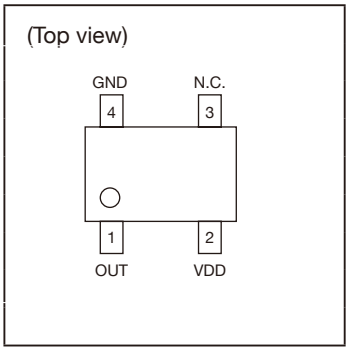

Model name structure

P S T 8 6 □ □ □ R

Housing
- R housing/ Halogen-contained Product — R
- L housing/ Halogen-contained Product — L

Package code
- SC-82ABB — U
- SOT-25A — N

Output voltage
- e.g.) 2.8V — 28

PST86 — Open drain output

Downloaded from Arrow.com.

Selection guide

Detection Voltage	Accuracy	Reset Threshold Hysteresis (typ.)	Open drain output	
			SOT-25A Package (3,000pcs/Reel)	SC-82ABB Package (3,000pcs/Reel)
1.2V	±1.0%	0.060V	PST8612NR	PST8612UR
1.3V	±1.0%	0.065V	PST8613NR	PST8613UR
1.4V	±1.0%	0.070V	PST8614NR	PST8614UR
1.5V	±1.0%	0.075V	PST8615NR	PST8615UR
1.6V	±1.0%	0.080V	PST8616NR	PST8616UR
1.7V	±1.0%	0.085V	PST8617NR	PST8617UR
1.8V	±1.0%	0.090V	PST8618NR	PST8618UR
1.9V	±1.0%	0.095V	PST8619NR	PST8619UR
2.0V	±1.0%	0.100V	PST8620NR	PST8620UR
2.1V	±1.0%	0.105V	PST8621NR	PST8621UR
2.2V	±1.0%	0.110V	PST8622NR	PST8622UR
2.3V	±1.0%	0.115V	PST8623NR	PST8623UR
2.4V	±1.0%	0.120V	PST8624NR	PST8624UR
2.5V	±1.0%	0.125V	PST8625NR	PST8625UR
2.6V	±1.0%	0.130V	PST8626NR	PST8626UR
2.7V	±1.0%	0.135V	PST8627NR	PST8627UR
2.8V	±1.0%	0.140V	PST8628NR	PST8628UR
2.9V	±1.0%	0.145V	PST8629NR	PST8629UR
3.0V	±1.0%	0.150V	PST8630NR	PST8630UR
3.1V	±1.0%	0.155V	PST8631NR	PST8631UR
3.2V	±1.0%	0.160V	PST8632NR	PST8632UR
3.3V	±1.0%	0.165V	PST8633NR	PST8633UR
3.4V	±1.0%	0.170V	PST8634NR	PST8634UR
3.5V	±1.0%	0.175V	PST8635NR	PST8635UR
3.6V	±1.0%	0.180V	PST8636NR	PST8636UR
3.7V	±1.0%	0.185V	PST8637NR	PST8637UR
3.8V	±1.0%	0.190V	PST8638NR	PST8638UR
3.9V	±1.0%	0.195V	PST8639NR	PST8639UR
4.0V	±1.0%	0.200V	PST8640NR	PST8640UR
4.1V	±1.0%	0.205V	PST8641NR	PST8641UR
4.2V	±1.0%	0.210V	PST8642NR	PST8642UR
4.3V	±1.0%	0.215V	PST8643NR	PST8643UR
4.4V	±1.0%	0.220V	PST8644NR	PST8644UR
4.5V	±1.0%	0.225V	PST8645NR	PST8645UR
4.6V	±1.0%	0.230V	PST8646NR	PST8646UR
4.7V	±1.0%	0.235V	PST8647NR	PST8647UR
4.8V	±1.0%	0.240V	PST8648NR	PST8648UR
4.9V	±1.0%	0.245V	PST8649NR	PST8649UR
5.0V	±1.0%	0.250V	PST8650NR	PST8650UR
5.1V	±1.0%	0.255V	PST8651NR	PST8651UR
5.2V	±1.0%	0.260V	PST8652NR	PST8652UR

Downloaded from Arrow.com.

2 RESET IC

CMOS system reset IC with separated sense line

PST851A / PST852A Series

Outline

This IC has separated the detecting voltage monitor terminal (VS) and the VDD terminal. Even if monitor voltage VS falls, when an operating limit is reached for another power supply, an output does not become unfixed, and the power supply of IC can maintain low level. It is especially suitable for the power supply surveillance of the low power supply (1V system).

Applications

(1) Reset circuits for microcomputers, CPUs and MPUs
(2) Reset circuits for logic circuit
(3) Battery voltage check circuit
(4) Back-up power supply switching circuit
(5) Level detection circuit

Features (Unless otherwise specified, Ta=+25°C)

(1) Separated Sence Pin
(2) High Accuracy .....±0.5% typ. (2.0 to 6.0V)
±0.8% typ. (0.8 to 1.9V)
(3) Ultra-low current consumption .0.35μA typ.
(4) Operating-voltage range 0.7 to10.0V
(5) Ultra-small package .....1.10×1.40mm (SSON-4B)
(6) Operating temperature range....–40°C to +105°C
(7) Detecting voltage rank .....0.8V to 6.0V (0.1Vstep)
(8) Output configuration
PST851A : CMOS output, Active-Low
PST852A : Open drain output, Active-Low

Pin assignment

SOT-25A

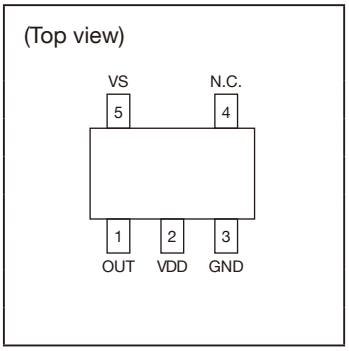

SC-82ABB

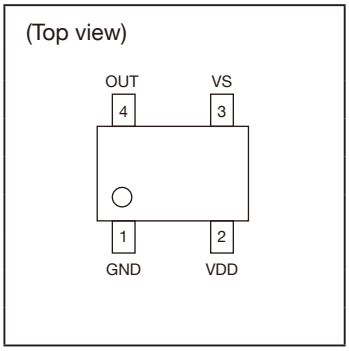

SSON-4B

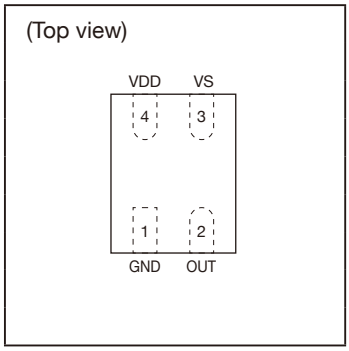

Model name structure

P S T 8 5 1 A □ □ □ □ □

Housing

R housing/ Halogen-contained Product	R
L housing/ Halogen-contained Product	L
R housing/ Halogen-free Product	M
L housing/ Halogen-free Product	H

Package code

SC-82ABB	U
SOT-25A	N
SSON-8B	R

Output voltage

e.g.) 2.80V	280

Without delay function

PST851	CMOS output
PST852	Open drain output

Downloaded from Arrow.com.

Selection guide

Detection Voltage	Accuracy	Reset Threshold Hysteresis (typ.)	CMOS output		
			SOT-25A Package (3,000pcs/Reel)	SC-82ABB Package (3,000pcs/Reel)	SSON-4B Package (3,000pcs/Reel)
0.8V	±0.8%	0.040V	PST851A080NM	PST851A080UM	PST851A080RL
0.9V	±0.8%	0.045V	PST851A090NM	PST851A090UM	PST851A090RL
1.0V	±0.8%	0.050V	PST851A100NM	PST851A100UM	PST851A100RL
1.1V	±0.8%	0.055V	PST851A110NM	PST851A110UM	PST851A110RL
1.2V	±0.8%	0.060V	PST851A120NM	PST851A120UM	PST851A120RL
1.3V	±0.8%	0.065V	PST851A130NM	PST851A130UM	PST851A130RL
1.4V	±0.8%	0.070V	PST851A140NM	PST851A140UM	PST851A140RL
1.5V	±0.8%	0.075V	PST851A150NM	PST851A150UM	PST851A150RL
1.6V	±0.8%	0.080V	PST851A160NM	PST851A160UM	PST851A160RL
1.7V	±0.8%	0.085V	PST851A170NM	PST851A170UM	PST851A170RL
1.8V	±0.8%	0.090V	PST851A180NM	PST851A180UM	PST851A180RL
1.9V	±0.8%	0.095V	PST851A190NM	PST851A190UM	PST851A190RL
2.0V	±0.5%	0.100V	PST851A200NM	PST851A200UM	PST851A200RL
2.1V	±0.5%	0.105V	PST851A210NM	PST851A210UM	PST851A210RL
2.2V	±0.5%	0.110V	PST851A220NM	PST851A220UM	PST851A220RL
2.3V	±0.5%	0.115V	PST851A230NM	PST851A230UM	PST851A230RL
2.4V	±0.5%	0.120V	PST851A240NM	PST851A240UM	PST851A240RL
2.5V	±0.5%	0.125V	PST851A250NM	PST851A250UM	PST851A250RL
2.6V	±0.5%	0.130V	PST851A260NM	PST851A260UM	PST851A260RL
2.7V	±0.5%	0.135V	PST851A270NM	PST851A270UM	PST851A270RL
2.8V	±0.5%	0.140V	PST851A280NM	PST851A280UM	PST851A280RL
2.9V	±0.5%	0.145V	PST851A290NM	PST851A290UM	PST851A290RL
3.0V	±0.5%	0.150V	PST851A300NM	PST851A300UM	PST851A300RL
3.1V	±0.5%	0.155V	PST851A310NM	PST851A310UM	PST851A310RL
3.2V	±0.5%	0.160V	PST851A320NM	PST851A320UM	PST851A320RL
3.3V	±0.5%	0.165V	PST851A330NM	PST851A330UM	PST851A330RL
3.4V	±0.5%	0.170V	PST851A340NM	PST851A340UM	PST851A340RL
3.5V	±0.5%	0.175V	PST851A350NM	PST851A350UM	PST851A350RL
3.6V	±0.5%	0.180V	PST851A360NM	PST851A360UM	PST851A360RL
3.7V	±0.5%	0.185V	PST851A370NM	PST851A370UM	PST851A370RL
3.8V	±0.5%	0.190V	PST851A380NM	PST851A380UM	PST851A380RL
3.9V	±0.5%	0.195V	PST851A390NM	PST851A390UM	PST851A390RL
4.0V	±0.5%	0.200V	PST851A400NM	PST851A400UM	PST851A400RL
4.1V	±0.5%	0.205V	PST851A410NM	PST851A410UM	PST851A410RL
4.2V	±0.5%	0.210V	PST851A420NM	PST851A420UM	PST851A420RL
4.3V	±0.5%	0.215V	PST851A430NM	PST851A430UM	PST851A430RL
4.4V	±0.5%	0.220V	PST851A440NM	PST851A440UM	PST851A440RL
4.5V	±0.5%	0.225V	PST851A450NM	PST851A450UM	PST851A450RL
4.6V	±0.5%	0.230V	PST851A460NM	PST851A460UM	PST851A460RL
4.7V	±0.5%	0.235V	PST851A470NM	PST851A470UM	PST851A470RL
4.8V	±0.5%	0.240V	PST851A480NM	PST851A480UM	PST851A480RL
4.9V	±0.5%	0.245V	PST851A490NM	PST851A490UM	PST851A490RL
5.0V	±0.5%	0.250V	PST851A500NM	PST851A500UM	PST851A500RL
5.1V	±0.5%	0.255V	PST851A510NM	PST851A510UM	PST851A510RL
5.2V	±0.5%	0.260V	PST851A520NM	PST851A520UM	PST851A520RL
5.3V	±0.5%	0.265V	PST851A530NM	PST851A530UM	PST851A530RL
5.4V	±0.5%	0.270V	PST851A540NM	PST851A540UM	PST851A540RL
5.5V	±0.5%	0.275V	PST851A550NM	PST851A550UM	PST851A550RL
5.6V	±0.5%	0.280V	PST851A560NM	PST851A560UM	PST851A560RL
5.7V	±0.5%	0.285V	PST851A570NM	PST851A570UM	PST851A570RL
5.8V	±0.5%	0.290V	PST851A580NM	PST851A580UM	PST851A580RL
5.9V	±0.5%	0.295V	PST851A590NM	PST851A590UM	PST851A590RL
6.0V	±0.5%	0.300V	PST851A600NM	PST851A600UM	PST851A600RL

Downloaded from Arrow.com.

Selection guide

Detection Voltage	Accuracy	Reset Threshold Hysteresis (typ.)	Open drain output		
			SOT-25A Package (3,000pcs/Reel)	SC-82ABB Package (3,000pcs/Reel)	SSON-4B Package (3,000pcs/Reel)
0.8V	±0.8%	0.040V	PST852A080NM	PST852A080UM	PST852A080RL
0.9V	±0.8%	0.045V	PST852A090NM	PST852A090UM	PST852A090RL
1.0V	±0.8%	0.050V	PST852A100NM	PST852A100UM	PST852A100RL
1.1V	±0.8%	0.055V	PST852A110NM	PST852A110UM	PST852A110RL
1.2V	±0.8%	0.060V	PST852A120NM	PST852A120UM	PST852A120RL
1.3V	±0.8%	0.065V	PST852A130NM	PST852A130UM	PST852A130RL
1.4V	±0.8%	0.070V	PST852A140NM	PST852A140UM	PST852A140RL
1.5V	±0.8%	0.075V	PST852A150NM	PST852A150UM	PST852A150RL
1.6V	±0.8%	0.080V	PST852A160NM	PST852A160UM	PST852A160RL
1.7V	±0.8%	0.085V	PST852A170NM	PST852A170UM	PST852A170RL
1.8V	±0.8%	0.090V	PST852A180NM	PST852A180UM	PST852A180RL
1.9V	±0.8%	0.095V	PST852A190NM	PST852A190UM	PST852A190RL
2.0V	±0.5%	0.100V	PST852A200NM	PST852A200UM	PST852A200RL
2.1V	±0.5%	0.105V	PST852A210NM	PST852A210UM	PST852A210RL
2.2V	±0.5%	0.110V	PST852A220NM	PST852A220UM	PST852A220RL
2.3V	±0.5%	0.115V	PST852A230NM	PST852A230UM	PST852A230RL
2.4V	±0.5%	0.120V	PST852A240NM	PST852A240UM	PST852A240RL
2.5V	±0.5%	0.125V	PST852A250NM	PST852A250UM	PST852A250RL
2.6V	±0.5%	0.130V	PST852A260NM	PST852A260UM	PST852A260RL
2.7V	±0.5%	0.135V	PST852A270NM	PST852A270UM	PST852A270RL
2.8V	±0.5%	0.140V	PST852A280NM	PST852A280UM	PST852A280RL
2.9V	±0.5%	0.145V	PST852A290NM	PST852A290UM	PST852A290RL
3.0V	±0.5%	0.150V	PST852A300NM	PST852A300UM	PST852A300RL
3.1V	±0.5%	0.155V	PST852A310NM	PST852A310UM	PST852A310RL
3.2V	±0.5%	0.160V	PST852A320NM	PST852A320UM	PST852A320RL
3.3V	±0.5%	0.165V	PST852A330NM	PST852A330UM	PST852A330RL
3.4V	±0.5%	0.170V	PST852A340NM	PST852A340UM	PST852A340RL
3.5V	±0.5%	0.175V	PST852A350NM	PST852A350UM	PST852A350RL
3.6V	±0.5%	0.180V	PST852A360NM	PST852A360UM	PST852A360RL
3.7V	±0.5%	0.185V	PST852A370NM	PST852A370UM	PST852A370RL
3.8V	±0.5%	0.190V	PST852A380NM	PST852A380UM	PST852A380RL
3.9V	±0.5%	0.195V	PST852A390NM	PST852A390UM	PST852A390RL
4.0V	±0.5%	0.200V	PST852A400NM	PST852A400UM	PST852A400RL
4.1V	±0.5%	0.205V	PST852A410NM	PST852A410UM	PST852A410RL
4.2V	±0.5%	0.210V	PST852A420NM	PST852A420UM	PST852A420RL
4.3V	±0.5%	0.215V	PST852A430NM	PST852A430UM	PST852A430RL
4.4V	±0.5%	0.220V	PST852A440NM	PST852A440UM	PST852A440RL
4.5V	±0.5%	0.225V	PST852A450NM	PST852A450UM	PST852A450RL
4.6V	±0.5%	0.230V	PST852A460NM	PST852A460UM	PST852A460RL
4.7V	±0.5%	0.235V	PST852A470NM	PST852A470UM	PST852A470RL
4.8V	±0.5%	0.240V	PST852A480NM	PST852A480UM	PST852A480RL
4.9V	±0.5%	0.245V	PST852A490NM	PST852A490UM	PST852A490RL
5.0V	±0.5%	0.250V	PST852A500NM	PST852A500UM	PST852A500RL
5.1V	±0.5%	0.255V	PST852A510NM	PST852A510UM	PST852A510RL
5.2V	±0.5%	0.260V	PST852A520NM	PST852A520UM	PST852A520RL
5.3V	±0.5%	0.265V	PST852A530NM	PST852A530UM	PST852A530RL
5.4V	±0.5%	0.270V	PST852A540NM	PST852A540UM	PST852A540RL
5.5V	±0.5%	0.275V	PST852A550NM	PST852A550UM	PST852A550RL
5.6V	±0.5%	0.280V	PST852A560NM	PST852A560UM	PST852A560RL
5.7V	±0.5%	0.285V	PST852A570NM	PST852A570UM	PST852A570RL
5.8V	±0.5%	0.290V	PST852A580NM	PST852A580UM	PST852A580RL
5.9V	±0.5%	0.295V	PST852A590NM	PST852A590UM	PST852A590RL
6.0V	±0.5%	0.300V	PST852A600NM	PST852A600UM	PST852A600RL

Downloaded from Arrow.com.

2 RESET IC

High accuracy CMOS system reset IC with delay time circuit

PST83XX / PST84XX Series

Outline

In various CPU systems or other logic systems, when the time of a power supply injection and a power supply are severed for a moment, this IC detects supply voltage and applies reset to a system. To ±1.5% of detection voltage accuracy of the conventional product, a maximum of ±0.5% of super-high precision is realized, and it is more suitable for battery detection etc. The accuracy from elegance is conventionally raised from +100 / −50% to ±10% also about delay resistance. Moreover, the component-side product is realizing the small space using SSON-4.

Features (Unless otherwise specified, Ta=+25°C)

(1) High Accuracy..... ±0.5% typ. / 2.0V to 6.0V
±0.8% typ. / 0.8V to 1.9V
(2) Super low supply current ..... 0.35μA typ.
(3) Component-side product..... 1.10×1.40mm (SSON-4B)
(4) Operating-temperature range.. −40°C to +105°C
(5) Delay resistance accuracy .... 0.8V to 6.0V (0.1V step)
(6) Detecting voltage rank ..... 10MΩ±10%
(7) Output configuration
PST83XX series :CMOS output
PST84XX series :Open drain output

Applications

(1) Reset circuits for microcomputers, CPUs and MPUs
(2) Reset circuits for logic circuit
(3) Battery voltage check circuit
(4) Back-up power supply switching circuit
(5) Level detection circuit

Pin assignment

SOT-25A

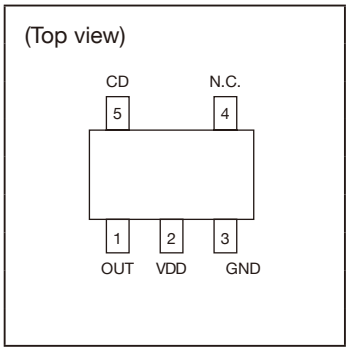

SC-82ABB

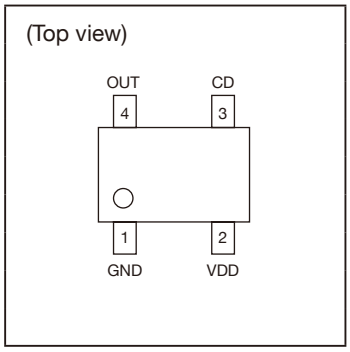

SSON-4B

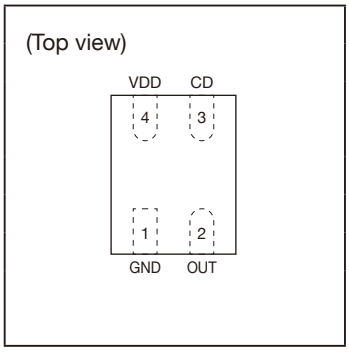

Model name structure

P S T 8 3 □ □ □ R
P S T 8 4 □ □ □ R

Housing	L R
Package code	
SC-82ABB	U
SOT-25A	N
SSON-4B	R
Output voltage	
e.g.) 2.8V	28
PST83	CMOS output
PST84	Open drain output

Downloaded from Arrow.com.

Selection guide

Detection Voltage	Accuracy	Reset Threshold Hysteresis (typ.)	CMOS output		
			SOT-25A Package (3,000pcs/Reel)	SC-82ABB Package (3,000pcs/Reel)	SSON-4B Package (3,000pcs/Reel)
0.8V	±0.8%	0.040V	IC-PST8308NR	IC-PST8308UR	IC-PST8308RL
0.9V	±0.8%	0.045V	IC-PST8309NR	IC-PST8309UR	IC-PST8309RL
1.0V	±0.8%	0.050V	IC-PST8310NR	IC-PST8310UR	IC-PST8310RL
1.1V	±0.8%	0.055V	IC-PST8311NR	IC-PST8311UR	IC-PST8311RL
1.2V	±0.8%	0.060V	IC-PST8312NR	IC-PST8312UR	IC-PST8312RL
1.3V	±0.8%	0.065V	IC-PST8313NR	IC-PST8313UR	IC-PST8313RL
1.4V	±0.8%	0.070V	IC-PST8314NR	IC-PST8314UR	IC-PST8314RL
1.5V	±0.8%	0.075V	IC-PST8315NR	IC-PST8315UR	IC-PST8315RL
1.6V	±0.8%	0.080V	IC-PST8316NR	IC-PST8316UR	IC-PST8316RL
1.7V	±0.8%	0.085V	IC-PST8317NR	IC-PST8317UR	IC-PST8317RL
1.8V	±0.8%	0.090V	IC-PST8318NR	IC-PST8318UR	IC-PST8318RL
1.9V	±0.8%	0.095V	IC-PST8319NR	IC-PST8319UR	IC-PST8319RL
2.0V	±0.5%	0.100V	IC-PST8320NR	IC-PST8320UR	IC-PST8320RL
2.1V	±0.5%	0.105V	IC-PST8321NR	IC-PST8321UR	IC-PST8321RL
2.2V	±0.5%	0.110V	IC-PST8322NR	IC-PST8322UR	IC-PST8322RL
2.3V	±0.5%	0.115V	IC-PST8323NR	IC-PST8323UR	IC-PST8323RL
2.4V	±0.5%	0.120V	IC-PST8324NR	IC-PST8324UR	IC-PST8324RL
2.5V	±0.5%	0.125V	IC-PST8325NR	IC-PST8325UR	IC-PST8325RL
2.6V	±0.5%	0.130V	IC-PST8326NR	IC-PST8326UR	IC-PST8326RL
2.7V	±0.5%	0.135V	IC-PST8327NR	IC-PST8327UR	IC-PST8327RL
2.8V	±0.5%	0.140V	IC-PST8328NR	IC-PST8328UR	IC-PST8328RL
2.9V	±0.5%	0.145V	IC-PST8329NR	IC-PST8329UR	IC-PST8329RL
3.0V	±0.5%	0.150V	IC-PST8330NR	IC-PST8330UR	IC-PST8330RL
3.1V	±0.5%	0.155V	IC-PST8331NR	IC-PST8331UR	IC-PST8331RL
3.2V	±0.5%	0.160V	IC-PST8332NR	IC-PST8332UR	IC-PST8332RL
3.3V	±0.5%	0.165V	IC-PST8333NR	IC-PST8333UR	IC-PST8333RL
3.4V	±0.5%	0.170V	IC-PST8334NR	IC-PST8334UR	IC-PST8334RL
3.5V	±0.5%	0.175V	IC-PST8335NR	IC-PST8335UR	IC-PST8335RL
3.6V	±0.5%	0.180V	IC-PST8336NR	IC-PST8336UR	IC-PST8336RL
3.7V	±0.5%	0.185V	IC-PST8337NR	IC-PST8337UR	IC-PST8337RL
3.8V	±0.5%	0.190V	IC-PST8338NR	IC-PST8338UR	IC-PST8338RL
3.9V	±0.5%	0.195V	IC-PST8339NR	IC-PST8339UR	IC-PST8339RL
4.0V	±0.5%	0.200V	IC-PST8340NR	IC-PST8340UR	IC-PST8340RL
4.1V	±0.5%	0.205V	IC-PST8341NR	IC-PST8341UR	IC-PST8341RL
4.2V	±0.5%	0.210V	IC-PST8342NR	IC-PST8342UR	IC-PST8342RL
4.3V	±0.5%	0.215V	IC-PST8343NR	IC-PST8343UR	IC-PST8343RL
4.4V	±0.5%	0.220V	IC-PST8344NR	IC-PST8344UR	IC-PST8344RL
4.5V	±0.5%	0.225V	IC-PST8345NR	IC-PST8345UR	IC-PST8345RL
4.6V	±0.5%	0.230V	IC-PST8346NR	IC-PST8346UR	IC-PST8346RL
4.7V	±0.5%	0.235V	IC-PST8347NR	IC-PST8347UR	IC-PST8347RL
4.8V	±0.5%	0.240V	IC-PST8348NR	IC-PST8348UR	IC-PST8348RL
4.9V	±0.5%	0.245V	IC-PST8349NR	IC-PST8349UR	IC-PST8349RL
5.0V	±0.5%	0.250V	IC-PST8350NR	IC-PST8350UR	IC-PST8350RL
5.1V	±0.5%	0.255V	IC-PST8351NR	IC-PST8351UR	IC-PST8351RL
5.2V	±0.5%	0.260V	IC-PST8352NR	IC-PST8352UR	IC-PST8352RL
5.3V	±0.5%	0.265V	IC-PST8353NR	IC-PST8353UR	IC-PST8353RL
5.4V	±0.5%	0.270V	IC-PST8354NR	IC-PST8354UR	IC-PST8354RL
5.5V	±0.5%	0.275V	IC-PST8355NR	IC-PST8355UR	IC-PST8355RL
5.6V	±0.5%	0.280V	IC-PST8356NR	IC-PST8356UR	IC-PST8356RL
5.7V	±0.5%	0.285V	IC-PST8357NR	IC-PST8357UR	IC-PST8357RL
5.8V	±0.5%	0.290V	IC-PST8358NR	IC-PST8358UR	IC-PST8358RL
5.9V	±0.5%	0.295V	IC-PST8359NR	IC-PST8359UR	IC-PST8359RL
6.0V	±0.5%	0.300V	IC-PST8360NR	IC-PST8360UR	IC-PST8360RL

Downloaded from Arrow.com.

Selection guide

Detection Voltage	Accuracy	Reset Threshold Hysteresis (typ.)	CMOS output		
			SOT-25A Package (3,000pcs/Reel)	SC-82ABB Package (3,000pcs/Reel)	SSON-4B Package (3,000pcs/Reel)
0.8V	±0.8%	0.040V	IC-PST8408NR	IC-PST8408UR	IC-PST8408RL
0.9V	±0.8%	0.045V	IC-PST8409NR	IC-PST8409UR	IC-PST8409RL
1.0V	±0.8%	0.050V	IC-PST8410NR	IC-PST8410UR	IC-PST8410RL
1.1V	±0.8%	0.055V	IC-PST8411NR	IC-PST8411UR	IC-PST8411RL
1.2V	±0.8%	0.060V	IC-PST8412NR	IC-PST8412UR	IC-PST8412RL
1.3V	±0.8%	0.065V	IC-PST8413NR	IC-PST8413UR	IC-PST8413RL
1.4V	±0.8%	0.070V	IC-PST8414NR	IC-PST8414UR	IC-PST8414RL
1.5V	±0.8%	0.075V	IC-PST8415NR	IC-PST8415UR	IC-PST8415RL
1.6V	±0.8%	0.080V	IC-PST8416NR	IC-PST8416UR	IC-PST8416RL
1.7V	±0.8%	0.085V	IC-PST8417NR	IC-PST8417UR	IC-PST8417RL
1.8V	±0.8%	0.090V	IC-PST8418NR	IC-PST8418UR	IC-PST8418RL
1.9V	±0.8%	0.095V	IC-PST8419NR	IC-PST8419UR	IC-PST8419RL
2.0V	±0.5%	0.100V	IC-PST8420NR	IC-PST8420UR	IC-PST8420RL
2.1V	±0.5%	0.105V	IC-PST8421NR	IC-PST8421UR	IC-PST8421RL
2.2V	±0.5%	0.110V	IC-PST8422NR	IC-PST8422UR	IC-PST8422RL
2.3V	±0.5%	0.115V	IC-PST8423NR	IC-PST8423UR	IC-PST8423RL
2.4V	±0.5%	0.120V	IC-PST8424NR	IC-PST8424UR	IC-PST8424RL
2.5V	±0.5%	0.125V	IC-PST8425NR	IC-PST8425UR	IC-PST8425RL
2.6V	±0.5%	0.130V	IC-PST8426NR	IC-PST8426UR	IC-PST8426RL
2.7V	±0.5%	0.135V	IC-PST8427NR	IC-PST8427UR	IC-PST8427RL
2.8V	±0.5%	0.140V	IC-PST8428NR	IC-PST8428UR	IC-PST8428RL
2.9V	±0.5%	0.145V	IC-PST8429NR	IC-PST8429UR	IC-PST8429RL
3.0V	±0.5%	0.150V	IC-PST8430NR	IC-PST8430UR	IC-PST8430RL
3.1V	±0.5%	0.155V	IC-PST8431NR	IC-PST8431UR	IC-PST8431RL
3.2V	±0.5%	0.160V	IC-PST8432NR	IC-PST8432UR	IC-PST8432RL
3.3V	±0.5%	0.165V	IC-PST8433NR	IC-PST8433UR	IC-PST8433RL
3.4V	±0.5%	0.170V	IC-PST8434NR	IC-PST8434UR	IC-PST8434RL
3.5V	±0.5%	0.175V	IC-PST8435NR	IC-PST8435UR	IC-PST8435RL
3.6V	±0.5%	0.180V	IC-PST8436NR	IC-PST8436UR	IC-PST8436RL
3.7V	±0.5%	0.185V	IC-PST8437NR	IC-PST8437UR	IC-PST8437RL
3.8V	±0.5%	0.190V	IC-PST8438NR	IC-PST8438UR	IC-PST8438RL
3.9V	±0.5%	0.195V	IC-PST8439NR	IC-PST8439UR	IC-PST8439RL
4.0V	±0.5%	0.200V	IC-PST8440NR	IC-PST8440UR	IC-PST8440RL
4.1V	±0.5%	0.205V	IC-PST8441NR	IC-PST8441UR	IC-PST8441RL
4.2V	±0.5%	0.210V	IC-PST8442NR	IC-PST8442UR	IC-PST8442RL
4.3V	±0.5%	0.215V	IC-PST8443NR	IC-PST8443UR	IC-PST8443RL
4.4V	±0.5%	0.220V	IC-PST8444NR	IC-PST8444UR	IC-PST8444RL
4.5V	±0.5%	0.225V	IC-PST8445NR	IC-PST8445UR	IC-PST8445RL
4.6V	±0.5%	0.230V	IC-PST8446NR	IC-PST8446UR	IC-PST8446RL
4.7V	±0.5%	0.235V	IC-PST8447NR	IC-PST8447UR	IC-PST8447RL
4.8V	±0.5%	0.240V	IC-PST8448NR	IC-PST8448UR	IC-PST8448RL
4.9V	±0.5%	0.245V	IC-PST8449NR	IC-PST8449UR	IC-PST8449RL
5.0V	±0.5%	0.250V	IC-PST8450NR	IC-PST8450UR	IC-PST8450RL
5.1V	±0.5%	0.255V	IC-PST8451NR	IC-PST8451UR	IC-PST8451RL
5.2V	±0.5%	0.260V	IC-PST8452NR	IC-PST8452UR	IC-PST8452RL
5.3V	±0.5%	0.265V	IC-PST8453NR	IC-PST8453UR	IC-PST8453RL
5.4V	±0.5%	0.270V	IC-PST8454NR	IC-PST8454UR	IC-PST8454RL
5.5V	±0.5%	0.275V	IC-PST8455NR	IC-PST8455UR	IC-PST8455RL
5.6V	±0.5%	0.280V	IC-PST8456NR	IC-PST8456UR	IC-PST8456RL
5.7V	±0.5%	0.285V	IC-PST8457NR	IC-PST8457UR	IC-PST8457RL
5.8V	±0.5%	0.290V	IC-PST8458NR	IC-PST8458UR	IC-PST8458RL
5.9V	±0.5%	0.295V	IC-PST8459NR	IC-PST8459UR	IC-PST8459RL
6.0V	±0.5%	0.300V	IC-PST8460NR	IC-PST8460UR	IC-PST8460RL

Downloaded from Arrow.com.

2 RESET IC

CMOS system reset IC with delay

PST893A / PST894A

Outline

This IC is a reset IC for turning on/off power supply and power flicker in CPU or logic systems.
This IC can change delay time by an external capacitor.
This IC is pin compatible with PST83XX and PST84XX.

Applications

(1) Reset circuits for microcomputers, CPUs and MPUs
(2) Reset circuits for logic circuit
(3) Battery voltage check circuit
(4) Back-up power supply switching circuit
(5) Level detection circuit

Features (Unless otherwise specified, Ta=+25°C)

(1) High Accuracy .....±1.0% typ.
(2) Ultra-low current consumption ...0.35μA typ.
(3) Operating-voltage range .....0.95V to 6.5V
(4) Small package .....1.0×1.0mm (PLP-4A)
(5) Operating temperature range.....−40°C to +105°C
(6) Detecting voltage rank .....1.2V to 5.2V (0.1Vstep)
(7) Delay Resistance.....10MΩ±10%
(8) Output configuration
PST893A:CMOS output
PST894A:Open drain output

Pin assignment

SOT-25A

(Top view)

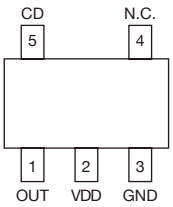

SC-82ABB

(Top view)

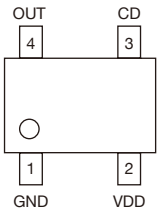

PLP-4A

(Top view)

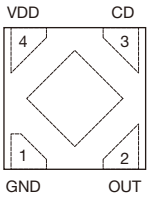

Model name structure

P S T 8 9 3 A □ □ □ □ □
P S T 8 9 4 A □ □ □ □ □

Housing

R housing/ Halogen-contained Product	R
L housing/ Halogen-contained Product	L
R housing/ Halogen-free Product	M
L housing/ Halogen-free Product	H

Package code

SC-82ABB	U
SOT-25A	N
PLP-4A	R

Output voltage

e.g.) 2.80V	280

Charge system of delay capacitor

Resistance type	A

PST893	CMOS output
PST894	Open drain output

Downloaded from Arrow.com.

Selection guide

Detection Voltage	Accuracy	Reset Threshold Hysteresis (typ.)	CMOS output		
			SOT-25A Package (3,000pcs/Reel)	SC-82ABB Package (3,000pcs/Reel)	SSON-4B Package (3,000pcs/Reel)
1.2V	±1.0%	0.060V	PST893A120NM	PST893A120UR	PST893A120RR
1.3V	±1.0%	0.065V	PST893A130NM	PST893A130UR	PST893A130RR
1.4V	±1.0%	0.070V	PST893A140NM	PST893A140UR	PST893A140RR
1.5V	±1.0%	0.075V	PST893A150NM	PST893A150UR	PST893A150RR
1.6V	±1.0%	0.080V	PST893A160NM	PST893A160UR	PST893A160RR
1.7V	±1.0%	0.085V	PST893A170NM	PST893A170UR	PST893A170RR
1.8V	±1.0%	0.090V	PST893A180NM	PST893A180UR	PST893A180RR
1.9V	±1.0%	0.095V	PST893A190NM	PST893A190UR	PST893A190RR
2.0V	±1.0%	0.100V	PST893A200NM	PST893A200UR	PST893A200RR
2.1V	±1.0%	0.105V	PST893A210NM	PST893A210UR	PST893A210RR
2.2V	±1.0%	0.110V	PST893A220NM	PST893A220UR	PST893A220RR
2.3V	±1.0%	0.115V	PST893A230NM	PST893A230UR	PST893A230RR
2.4V	±1.0%	0.120V	PST893A240NM	PST893A240UR	PST893A240RR
2.5V	±1.0%	0.125V	PST893A250NM	PST893A250UR	PST893A250RR
2.6V	±1.0%	0.130V	PST893A260NM	PST893A260UR	PST893A260RR
2.7V	±1.0%	0.135V	PST893A270NM	PST893A270UR	PST893A270RR
2.8V	±1.0%	0.140V	PST893A280NM	PST893A280UR	PST893A280RR
2.9V	±1.0%	0.145V	PST893A290NM	PST893A290UR	PST893A290RR
3.0V	±1.0%	0.150V	PST893A300NM	PST893A300UR	PST893A300RR
3.1V	±1.0%	0.155V	PST893A310NM	PST893A310UR	PST893A310RR
3.2V	±1.0%	0.160V	PST893A320NM	PST893A320UR	PST893A320RR
3.3V	±1.0%	0.165V	PST893A330NM	PST893A330UR	PST893A330RR
3.4V	±1.0%	0.170V	PST893A340NM	PST893A340UR	PST893A340RR
3.5V	±1.0%	0.175V	PST893A350NM	PST893A350UR	PST893A350RR
3.6V	±1.0%	0.180V	PST893A360NM	PST893A360UR	PST893A360RR
3.7V	±1.0%	0.185V	PST893A370NM	PST893A370UR	PST893A370RR
3.8V	±1.0%	0.190V	PST893A380NM	PST893A380UR	PST893A380RR
3.9V	±1.0%	0.195V	PST893A390NM	PST893A390UR	PST893A390RR
4.0V	±1.0%	0.200V	PST893A400NM	PST893A400UR	PST893A400RR
4.1V	±1.0%	0.205V	PST893A410NM	PST893A410UR	PST893A410RR
4.2V	±1.0%	0.210V	PST893A420NM	PST893A420UR	PST893A420RR
4.3V	±1.0%	0.215V	PST893A430NM	PST893A430UR	PST893A430RR
4.4V	±1.0%	0.220V	PST893A440NM	PST893A440UR	PST893A440RR
4.5V	±1.0%	0.225V	PST893A450NM	PST893A450UR	PST893A450RR
4.6V	±1.0%	0.230V	PST893A460NM	PST893A460UR	PST893A460RR
4.7V	±1.0%	0.235V	PST893A470NM	PST893A470UR	PST893A470RR
4.8V	±1.0%	0.240V	PST893A480NM	PST893A480UR	PST893A480RR
4.9V	±1.0%	0.245V	PST893A490NM	PST893A490UR	PST893A490RR
5.0V	±1.0%	0.250V	PST893A500NM	PST893A500UR	PST893A500RR
5.1V	±1.0%	0.255V	PST893A510NM	PST893A510UR	PST893A510RR
5.2V	±1.0%	0.260V	PST893A520NM	PST893A520UR	PST893A520RR

Downloaded from Arrow.com.

Selection guide

Detection Voltage	Accuracy	Reset Threshold Hysteresis (typ.)	Open drain output		
			SOT-25A Package (3,000pcs/Reel)	SC-82ABB Package (3,000pcs/Reel)	SSON-4B Package (3,000pcs/Reel)
1.2V	±1.0%	0.060V	PST894A120NM	PST894A120UR	PST894A120RR
1.3V	±1.0%	0.065V	PST894A130NM	PST894A130UR	PST894A130RR
1.4V	±1.0%	0.070V	PST894A140NM	PST894A140UR	PST894A140RR
1.5V	±1.0%	0.075V	PST894A150NM	PST894A150UR	PST894A150RR
1.6V	±1.0%	0.080V	PST894A160NM	PST894A160UR	PST894A160RR
1.7V	±1.0%	0.085V	PST894A170NM	PST894A170UR	PST894A170RR
1.8V	±1.0%	0.090V	PST894A180NM	PST894A180UR	PST894A180RR
1.9V	±1.0%	0.095V	PST894A190NM	PST894A190UR	PST894A190RR
2.0V	±1.0%	0.100V	PST894A200NM	PST894A200UR	PST894A200RR
2.1V	±1.0%	0.105V	PST894A210NM	PST894A210UR	PST894A210RR
2.2V	±1.0%	0.110V	PST894A220NM	PST894A220UR	PST894A220RR
2.3V	±1.0%	0.115V	PST894A230NM	PST894A230UR	PST894A230RR
2.4V	±1.0%	0.120V	PST894A240NM	PST894A240UR	PST894A240RR
2.5V	±1.0%	0.125V	PST894A250NM	PST894A250UR	PST894A250RR
2.6V	±1.0%	0.130V	PST894A260NM	PST894A260UR	PST894A260RR
2.7V	±1.0%	0.135V	PST894A270NM	PST894A270UR	PST894A270RR
2.8V	±1.0%	0.140V	PST894A280NM	PST894A280UR	PST894A280RR
2.9V	±1.0%	0.145V	PST894A290NM	PST894A290UR	PST894A290RR
3.0V	±1.0%	0.150V	PST894A300NM	PST894A300UR	PST894A300RR
3.1V	±1.0%	0.155V	PST894A310NM	PST894A310UR	PST894A310RR
3.2V	±1.0%	0.160V	PST894A320NM	PST894A320UR	PST894A320RR
3.3V	±1.0%	0.165V	PST894A330NM	PST894A330UR	PST894A330RR
3.4V	±1.0%	0.170V	PST894A340NM	PST894A340UR	PST894A340RR
3.5V	±1.0%	0.175V	PST894A350NM	PST894A350UR	PST894A350RR
3.6V	±1.0%	0.180V	PST894A360NM	PST894A360UR	PST894A360RR
3.7V	±1.0%	0.185V	PST894A370NM	PST894A370UR	PST894A370RR
3.8V	±1.0%	0.190V	PST894A380NM	PST894A380UR	PST894A380RR
3.9V	±1.0%	0.195V	PST894A390NM	PST894A390UR	PST894A390RR
4.0V	±1.0%	0.200V	PST894A400NM	PST894A400UR	PST894A400RR
4.1V	±1.0%	0.205V	PST894A410NM	PST894A410UR	PST894A410RR
4.2V	±1.0%	0.210V	PST894A420NM	PST894A420UR	PST894A420RR
4.3V	±1.0%	0.215V	PST894A430NM	PST894A430UR	PST894A430RR
4.4V	±1.0%	0.220V	PST894A440NM	PST894A440UR	PST894A440RR
4.5V	±1.0%	0.225V	PST894A450NM	PST894A450UR	PST894A450RR
4.6V	±1.0%	0.230V	PST894A460NM	PST894A460UR	PST894A460RR
4.7V	±1.0%	0.235V	PST894A470NM	PST894A470UR	PST894A470RR
4.8V	±1.0%	0.240V	PST894A480NM	PST894A480UR	PST894A480RR
4.9V	±1.0%	0.245V	PST894A490NM	PST894A490UR	PST894A490RR
5.0V	±1.0%	0.250V	PST894A500NM	PST894A500UR	PST894A500RR
5.1V	±1.0%	0.255V	PST894A510NM	PST894A510UR	PST894A510RR
5.2V	±1.0%	0.260V	PST894A520NM	PST894A520UR	PST894A520RR

Downloaded from Arrow.com.

2 RESET IC

CMOS system reset IC with delay

PST893B / PST894B Series

Outline

This IC is a reset IC for turning on/off power supply and power flicker in CPU or logic systems. This IC can change delay time by an external capacitor. Charging method of the capacitor, is current source type. Current source type can reduce temperature fluctuations in the delay time typ. ±6% (Ta=−40ºC to +105ºC), It is ideal for a wide set the operating temperature range.
This IC is pin compatible with PST83XX and PST84XX

Features (Unless otherwise specified, Ta=+25°C)

(1) Delay time reduced temperature fluctuations
(2) High Accuracy..... ±1.0% typ.
(2) Ultra-low current consumption ... 0.35μA typ.
(3) Operating-voltage range ..... 0.95V to 6.5V
(4) Operating temperature range..... −40°C to +105°C
(5) Detecting voltage rank ..... 1.2V to 5.2V (0.1Vstep)
(6) Delay Resistance..... Current source type 100nA±10%
(7) Output configuration ..... PST893B: CMOS output
PST894B: Open drain output

Applications

(1) Reset circuits for microcomputers, CPUs and MPUs
(2) Reset circuits for logic circuit
(3) Battery voltage check circuit
(4) Back-up power supply switching circuit
(5) Level detection circuit

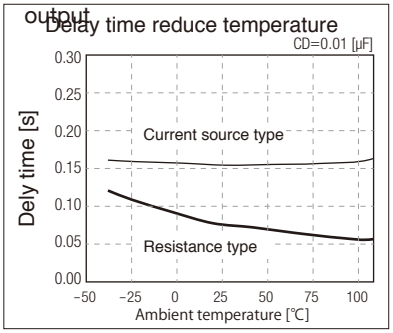

Pin assignment

SOT-25A

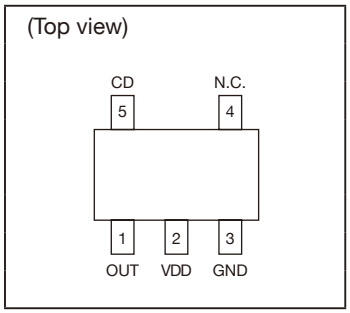

SC-82ABB

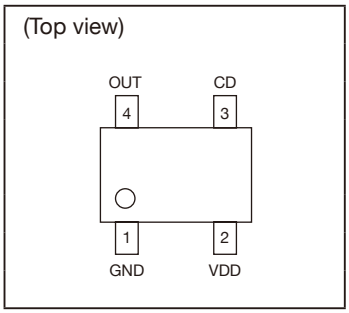

Model name structure

P S T 8 9 3 B □ □ □ □ □
P S T 8 9 4 B □ □ □ □ □

Housing
R housing/ Halogen-free Product M
L housing/ Halogen-free Product H

Package code
SC-82ABB U
SOT-25A N

Output voltage
e.g.) 2.80V 280

Charge system of delay capacitor
Current source type B

PST893 CMOS output
PST894 Open drain output

Downloaded from Arrow.com.

Selection guide

Detection Voltage	Accuracy	Reset Threshold Hysteresis (typ.)	CMOS output	
			SOT-25A Package (3,000pcs/Reel)	SC-82ABB Package (3,000pcs/Reel)
1.2V	±1.0%	0.060V	PST893B120NM	PST893B120UM
1.3V	±1.0%	0.065V	PST893B130NM	PST893B130UM
1.4V	±1.0%	0.070V	PST893B140NM	PST893B140UM
1.5V	±1.0%	0.075V	PST893B150NM	PST893B150UM
1.6V	±1.0%	0.080V	PST893B160NM	PST893B160UM
1.7V	±1.0%	0.085V	PST893B170NM	PST893B170UM
1.8V	±1.0%	0.090V	PST893B180NM	PST893B180UM
1.9V	±1.0%	0.095V	PST893B190NM	PST893B190UM
2.0V	±1.0%	0.100V	PST893B200NM	PST893B200UM
2.1V	±1.0%	0.105V	PST893B210NM	PST893B210UM
2.2V	±1.0%	0.110V	PST893B220NM	PST893B220UM
2.3V	±1.0%	0.115V	PST893B230NM	PST893B230UM
2.4V	±1.0%	0.120V	PST893B240NM	PST893B240UM
2.5V	±1.0%	0.125V	PST893B250NM	PST893B250UM
2.6V	±1.0%	0.130V	PST893B260NM	PST893B260UM
2.7V	±1.0%	0.135V	PST893B270NM	PST893B270UM
2.8V	±1.0%	0.140V	PST893B280NM	PST893B280UM
2.9V	±1.0%	0.145V	PST893B290NM	PST893B290UM
3.0V	±1.0%	0.150V	PST893B300NM	PST893B300UM
3.1V	±1.0%	0.155V	PST893B310NM	PST893B310UM
3.2V	±1.0%	0.160V	PST893B320NM	PST893B320UM
3.3V	±1.0%	0.165V	PST893B330NM	PST893B330UM
3.4V	±1.0%	0.170V	PST893B340NM	PST893B340UM
3.5V	±1.0%	0.175V	PST893B350NM	PST893B350UM
3.6V	±1.0%	0.180V	PST893B360NM	PST893B360UM
3.7V	±1.0%	0.185V	PST893B370NM	PST893B370UM
3.8V	±1.0%	0.190V	PST893B380NM	PST893B380UM
3.9V	±1.0%	0.195V	PST893B390NM	PST893B390UM
4.0V	±1.0%	0.200V	PST893B400NM	PST893B400UM
4.1V	±1.0%	0.205V	PST893B410NM	PST893B410UM
4.2V	±1.0%	0.210V	PST893B420NM	PST893B420UM
4.3V	±1.0%	0.215V	PST893B430NM	PST893B430UM
4.4V	±1.0%	0.220V	PST893B440NM	PST893B440UM
4.5V	±1.0%	0.225V	PST893B450NM	PST893B450UM
4.6V	±1.0%	0.230V	PST893B460NM	PST893B460UM
4.7V	±1.0%	0.235V	PST893B470NM	PST893B470UM
4.8V	±1.0%	0.240V	PST893B480NM	PST893B480UM
4.9V	±1.0%	0.245V	PST893B490NM	PST893B490UM
5.0V	±1.0%	0.250V	PST893B500NM	PST893B500UM
5.1V	±1.0%	0.255V	PST893B510NM	PST893B510UM
5.2V	±1.0%	0.260V	PST893B520NM	PST893B520UM

Downloaded from Arrow.com.

Selection guide

Detection Voltage	Accuracy	Reset Threshold Hysteresis (typ.)	Open drain output	
			SOT-25A Package (3,000pcs/Reel)	SC-82ABB Package (3,000pcs/Reel)
1.2V	±1.0%	0.060V	PST894B120NM	PST894B120UM
1.3V	±1.0%	0.065V	PST894B130NM	PST894B130UM
1.4V	±1.0%	0.070V	PST894B140NM	PST894B140UM
1.5V	±1.0%	0.075V	PST894B150NM	PST894B150UM
1.6V	±1.0%	0.080V	PST894B160NM	PST894B160UM
1.7V	±1.0%	0.085V	PST894B170NM	PST894B170UM
1.8V	±1.0%	0.090V	PST894B180NM	PST894B180UM
1.9V	±1.0%	0.095V	PST894B190NM	PST894B190UM
2.0V	±1.0%	0.100V	PST894B200NM	PST894B200UM
2.1V	±1.0%	0.105V	PST894B210NM	PST894B210UM
2.2V	±1.0%	0.110V	PST894B220NM	PST894B220UM
2.3V	±1.0%	0.115V	PST894B230NM	PST894B230UM
2.4V	±1.0%	0.120V	PST894B240NM	PST894B240UM
2.5V	±1.0%	0.125V	PST894B250NM	PST894B250UM
2.6V	±1.0%	0.130V	PST894B260NM	PST894B260UM
2.7V	±1.0%	0.135V	PST894B270NM	PST894B270UM
2.8V	±1.0%	0.140V	PST894B280NM	PST894B280UM
2.9V	±1.0%	0.145V	PST894B290NM	PST894B290UM
3.0V	±1.0%	0.150V	PST894B300NM	PST894B300UM
3.1V	±1.0%	0.155V	PST894B310NM	PST894B310UM
3.2V	±1.0%	0.160V	PST894B320NM	PST894B320UM
3.3V	±1.0%	0.165V	PST894B330NM	PST894B330UM
3.4V	±1.0%	0.170V	PST894B340NM	PST894B340UM
3.5V	±1.0%	0.175V	PST894B350NM	PST894B350UM
3.6V	±1.0%	0.180V	PST894B360NM	PST894B360UM
3.7V	±1.0%	0.185V	PST894B370NM	PST894B370UM
3.8V	±1.0%	0.190V	PST894B380NM	PST894B380UM
3.9V	±1.0%	0.195V	PST894B390NM	PST894B390UM
4.0V	±1.0%	0.200V	PST894B400NM	PST894B400UM
4.1V	±1.0%	0.205V	PST894B410NM	PST894B410UM
4.2V	±1.0%	0.210V	PST894B420NM	PST894B420UM
4.3V	±1.0%	0.215V	PST894B430NM	PST894B430UM
4.4V	±1.0%	0.220V	PST894B440NM	PST894B440UM
4.5V	±1.0%	0.225V	PST894B450NM	PST894B450UM
4.6V	±1.0%	0.230V	PST894B460NM	PST894B460UM
4.7V	±1.0%	0.235V	PST894B470NM	PST894B470UM
4.8V	±1.0%	0.240V	PST894B480NM	PST894B480UM
4.9V	±1.0%	0.245V	PST894B490NM	PST894B490UM
5.0V	±1.0%	0.250V	PST894B500NM	PST894B500UM
5.1V	±1.0%	0.255V	PST894B510NM	PST894B510UM
5.2V	±1.0%	0.260V	PST894B520NM	PST894B520UM

Downloaded from Arrow.com.

2 RESET IC

CMOS system reset IC built-in delay time circuit

PST87XX / PST88XX Series

Outline

This IC is a system reset IC builtin delay time circuit.
PST87 / PST88 is not required with an external capacitor, and then can use a small package.
Therefore a space of PC board can be small.

Applications

(1) Reset circuits for microcomputers, CPUs and MPUs
(2) Reset circuits for logic circuit
(3) Battery voltage check circuit
(4) Back-up power supply switching circuit
(5) Level detection circuit
(6) Mechanical reset circuit

Features (Unless otherwise specified, Ta=+25°C)

(1) Operating supply voltage.....1.0V to 5.5V
(2) Supply current.....1μA typ.
(3) Detection voltage range.....1.6V to 4.6V
(4) Accuracy .....±1.5% typ.
(5) Reset threshold hysteresis.....50mV typ.
(6) Reset active timeout period 20mS/50mS/100ms/200mS
(7) Output type
PST87xx: CMOS output,Active-Low
PST88xx: Open drain output,Acrive-Low

Pin assignment

SOT-25A

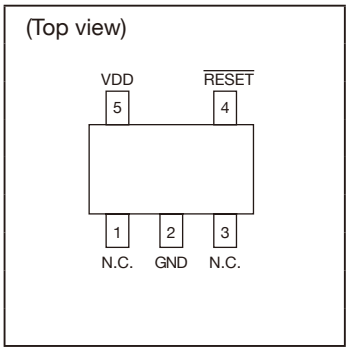

SC-82ABB

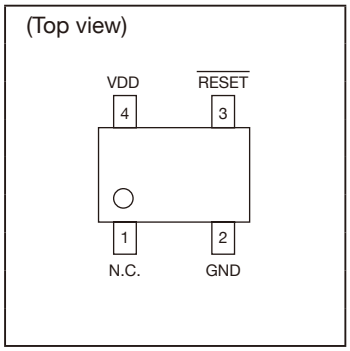

SSON-4B

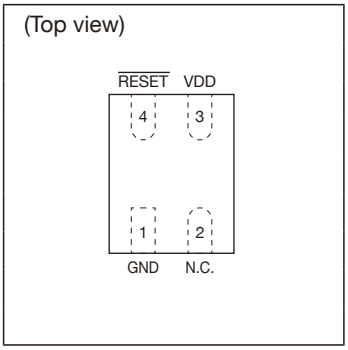

Model name structure

CMOS / Active-Low Output Type.

P S T 8 7 □ A □ □ □ N □
a b c d

Open-Drain / Active-Low Output Type.

P S T 8 8 □ A □ □ □ N □
a b c d

a		b		C		d	
Delay time Rank		Detection Voltage Rank		Package		Packing Specifications	
0	20ms	160	VDET=1.60V	N	SOT-25A	R	R Housing
1	50ms	|	|	U	SC-82ABB	L	L Housing
2	100ms	460	VDET=4.60V	R	SSON-4B	-	-
3	200ms	-	-	-		-	-

Downloaded from Arrow.com.

Selection guide

Detection Voltage	Accuracy	delay time (typ.)	CMOS output			Open Drain output		
			SOT-25A Package (3,000pcs/Reel)	SC-82ABB Package (3,000pcs/Reel)	SSON-4B Package (3,000pcs/Reel)	SOT-25A Package (3,000pcs/Reel)	SC-82ABB Package (3,000pcs/Reel)	SSON-4B Package (3,000pcs/Reel)
1.60V	±1.5%	20ms	PST870A160NR	PST870A160UR	PST870A160RL	PST880A160NR	PST880A160UR	PST880A160RL
		50ms	PST871A160NR	PST871A160UR	PST871A160RL	PST881A160NR	PST881A160UR	PST881A160RL
		100ms	PST872A160NR	PST872A160UR	PST872A160RL	PST882A160NR	PST882A160UR	PST882A160RL
		200ms	PST873A160NR	PST873A160UR	PST873A160RL	PST883A160NR	PST883A160UR	PST883A160RL
1.70V	±1.5%	20ms	PST870A170NR	PST870A170UR	PST870A170RL	PST880A170NR	PST880A170UR	PST880A170RL
		50ms	PST871A170NR	PST871A170UR	PST871A170RL	PST881A170NR	PST881A170UR	PST881A170RL
		100ms	PST872A170NR	PST872A170UR	PST872A170RL	PST882A170NR	PST882A170UR	PST882A170RL
		200ms	PST873A170NR	PST873A170UR	PST873A170RL	PST883A170NR	PST883A170UR	PST883A170RL
1.80V	±1.5%	20ms	PST870A180NR	PST870A180UR	PST870A180RL	PST880A180NR	PST880A180UR	PST880A180RL
		50ms	PST871A180NR	PST871A180UR	PST871A180RL	PST881A180NR	PST881A180UR	PST881A180RL
		100ms	PST872A180NR	PST872A180UR	PST872A180RL	PST882A180NR	PST882A180UR	PST882A180RL
		200ms	PST873A180NR	PST873A180UR	PST873A180RL	PST883A180NR	PST883A180UR	PST883A180RL
1.90V	±1.5%	20ms	PST870A190NR	PST870A190UR	PST870A190RL	PST880A190NR	PST880A190UR	PST880A190RL
		50ms	PST871A190NR	PST871A190UR	PST871A190RL	PST881A190NR	PST881A190UR	PST881A190RL
		100ms	PST872A190NR	PST872A190UR	PST872A190RL	PST882A190NR	PST882A190UR	PST882A190RL
		200ms	PST873A190NR	PST873A190UR	PST873A190RL	PST883A190NR	PST883A190UR	PST883A190RL
2.00V	±1.5%	20ms	PST870A200NR	PST870A200UR	PST870A200RL	PST880A200NR	PST880A200UR	PST880A200RL
		50ms	PST871A200NR	PST871A200UR	PST871A200RL	PST881A200NR	PST881A200UR	PST881A200RL
		100ms	PST872A200NR	PST872A200UR	PST872A200RL	PST882A200NR	PST882A200UR	PST882A200RL
		200ms	PST873A200NR	PST873A200UR	PST873A200RL	PST883A200NR	PST883A200UR	PST883A200RL
2.10V	±1.5%	20ms	PST870A210NR	PST870A210UR	PST870A210RL	PST880A210NR	PST880A210UR	PST880A210RL
		50ms	PST871A210NR	PST871A210UR	PST871A210RL	PST881A210NR	PST881A210UR	PST881A210RL
		100ms	PST872A210NR	PST872A210UR	PST872A210RL	PST882A210NR	PST882A210UR	PST882A210RL
		200ms	PST873A210NR	PST873A210UR	PST873A210RL	PST883A210NR	PST883A210UR	PST883A210RL
2.20V	±1.5%	20ms	PST870A220NR	PST870A220UR	PST870A220RL	PST880A220NR	PST880A220UR	PST880A220RL
		50ms	PST871A220NR	PST871A220UR	PST871A220RL	PST881A220NR	PST881A220UR	PST881A220RL
		100ms	PST872A220NR	PST872A220UR	PST872A220RL	PST882A220NR	PST882A220UR	PST882A220RL
		200ms	PST873A220NR	PST873A220UR	PST873A220RL	PST883A220NR	PST883A220UR	PST883A220RL
2.30V	±1.5%	20ms	PST870A230NR	PST870A230UR	PST870A230RL	PST880A230NR	PST880A230UR	PST880A230RL
		50ms	PST871A230NR	PST871A230UR	PST871A230RL	PST881A230NR	PST881A230UR	PST881A230RL
		100ms	PST872A230NR	PST872A230UR	PST872A230RL	PST882A230NR	PST882A230UR	PST882A230RL
		200ms	PST873A230NR	PST873A230UR	PST873A230RL	PST883A230NR	PST883A230UR	PST883A230RL
2.40V	±1.5%	20ms	PST870A240NR	PST870A240UR	PST870A240RL	PST880A240NR	PST880A240UR	PST880A240RL
		50ms	PST871A240NR	PST871A240UR	PST871A240RL	PST881A240NR	PST881A240UR	PST881A240RL
		100ms	PST872A240NR	PST872A240UR	PST872A240RL	PST882A240NR	PST882A240UR	PST882A240RL
		200ms	PST873A240NR	PST873A240UR	PST873A240RL	PST883A240NR	PST883A240UR	PST883A240RL
2.50V	±1.5%	20ms	PST870A250NR	PST870A250UR	PST870A250RL	PST880A250NR	PST880A250UR	PST880A250RL
		50ms	PST871A250NR	PST871A250UR	PST871A250RL	PST881A250NR	PST881A250UR	PST881A250RL
		100ms	PST872A250NR	PST872A250UR	PST872A250RL	PST882A250NR	PST882A250UR	PST882A250RL
		200ms	PST873A250NR	PST873A250UR	PST873A250RL	PST883A250NR	PST883A250UR	PST883A250RL
2.60V	±1.5%	20ms	PST870A260NR	PST870A260UR	PST870A260RL	PST880A260NR	PST880A260UR	PST880A260RL
		50ms	PST871A260NR	PST871A260UR	PST871A260RL	PST881A260NR	PST881A260UR	PST881A260RL
		100ms	PST872A260NR	PST872A260UR	PST872A260RL	PST882A260NR	PST882A260UR	PST882A260RL
		200ms	PST873A260NR	PST873A260UR	PST873A260RL	PST883A260NR	PST883A260UR	PST883A260RL
2.70V	±1.5%	20ms	PST870A270NR	PST870A270UR	PST870A270RL	PST880A270NR	PST880A270UR	PST880A270RL
		50ms	PST871A270NR	PST871A270UR	PST871A270RL	PST881A270NR	PST881A270UR	PST881A270RL
		100ms	PST872A270NR	PST872A270UR	PST872A270RL	PST882A270NR	PST882A270UR	PST882A270RL
		200ms	PST873A270NR	PST873A270UR	PST873A270RL	PST883A270NR	PST883A270UR	PST883A270RL
2.80V	±1.5%	20ms	PST870A280NR	PST870A280UR	PST870A280RL	PST880A280NR	PST880A280UR	PST880A280RL
		50ms	PST871A280NR	PST871A280UR	PST871A280RL	PST881A280NR	PST881A280UR	PST881A280RL
		100ms	PST872A280NR	PST872A280UR	PST872A280RL	PST882A280NR	PST882A280UR	PST882A280RL
		200ms	PST873A280NR	PST873A280UR	PST873A280RL	PST883A280NR	PST883A280UR	PST883A280RL
2.90V	±1.5%	20ms	PST870A290NR	PST870A290UR	PST870A290RL	PST880A290NR	PST880A290UR	PST880A290RL
		50ms	PST871A290NR	PST871A290UR	PST871A290RL	PST881A290NR	PST881A290UR	PST881A290RL
		100ms	PST872A290NR	PST872A290UR	PST872A290RL	PST882A290NR	PST882A290UR	PST882A290RL
		200ms	PST873A290NR	PST873A290UR	PST873A290RL	PST883A290NR	PST883A290UR	PST883A290RL
3.00V	±1.5%	20ms	PST870A300NR	PST870A300UR	PST870A300RL	PST880A300NR	PST880A300UR	PST880A300RL
		50ms	PST871A300NR	PST871A300UR	PST871A300RL	PST881A300NR	PST881A300UR	PST881A300RL
		100ms	PST872A300NR	PST872A300UR	PST872A300RL	PST882A300NR	PST882A300UR	PST882A300RL
		200ms	PST873A300NR	PST873A300UR	PST873A300RL	PST883A300NR	PST883A300UR	PST883A300RL

Downloaded from Arrow.com.

Selection guide

Detection Voltage	Accuracy	delay time (typ.)	CMOS output			Open Drain output		
			SOT-25A Package (3,000pcs/Reel)	SC-82ABB Package (3,000pcs/Reel)	SSON-4B Package (3,000pcs/Reel)	SOT-25A Package (3,000pcs/Reel)	SC-82ABB Package (3,000pcs/Reel)	SSON-4B Package (3,000pcs/Reel)
3.10V	±1.5%	20ms	PST870A310NR	PST870A310UR	PST870A310RL	PST880A310NR	PST880A310UR	PST880A310RL
		50ms	PST871A310NR	PST871A310UR	PST871A310RL	PST881A310NR	PST881A310UR	PST881A310RL
		100ms	PST872A310NR	PST872A310UR	PST872A310RL	PST882A310NR	PST882A310UR	PST882A310RL
		200ms	PST873A310NR	PST873A310UR	PST873A310RL	PST883A310NR	PST883A310UR	PST883A310RL
3.20V	±1.5%	20ms	PST870A320NR	PST870A320UR	PST870A320RL	PST880A320NR	PST880A320UR	PST880A320RL
		50ms	PST871A320NR	PST871A320UR	PST871A320RL	PST881A320NR	PST881A320UR	PST881A320RL
		100ms	PST872A320NR	PST872A320UR	PST872A320RL	PST882A320NR	PST882A320UR	PST882A320RL
		200ms	PST873A320NR	PST873A320UR	PST873A320RL	PST883A320NR	PST883A320UR	PST883A320RL
3.30V	±1.5%	20ms	PST870A330NR	PST870A330UR	PST870A330RL	PST880A330NR	PST880A330UR	PST880A330RL
		50ms	PST871A330NR	PST871A330UR	PST871A330RL	PST881A330NR	PST881A330UR	PST881A330RL
		100ms	PST872A330NR	PST872A330UR	PST872A330RL	PST882A330NR	PST882A330UR	PST882A330RL
		200ms	PST873A330NR	PST873A330UR	PST873A330RL	PST883A330NR	PST883A330UR	PST883A330RL
3.40V	±1.5%	20ms	PST870A340NR	PST870A340UR	PST870A340RL	PST880A340NR	PST880A340UR	PST880A340RL
		50ms	PST871A340NR	PST871A340UR	PST871A340RL	PST881A340NR	PST881A340UR	PST881A340RL
		100ms	PST872A340NR	PST872A340UR	PST872A340RL	PST882A340NR	PST882A340UR	PST882A340RL
		200ms	PST873A340NR	PST873A340UR	PST873A340RL	PST883A340NR	PST883A340UR	PST883A340RL
3.50V	±1.5%	20ms	PST870A350NR	PST870A350UR	PST870A350RL	PST880A350NR	PST880A350UR	PST880A350RL
		50ms	PST871A350NR	PST871A350UR	PST871A350RL	PST881A350NR	PST881A350UR	PST881A350RL
		100ms	PST872A350NR	PST872A350UR	PST872A350RL	PST882A350NR	PST882A350UR	PST882A350RL
		200ms	PST873A350NR	PST873A350UR	PST873A350RL	PST883A350NR	PST883A350UR	PST883A350RL
3.60V	±1.5%	20ms	PST870A360NR	PST870A360UR	PST870A360RL	PST880A360NR	PST880A360UR	PST880A360RL
		50ms	PST871A360NR	PST871A360UR	PST871A360RL	PST881A360NR	PST881A360UR	PST881A360RL
		100ms	PST872A360NR	PST872A360UR	PST872A360RL	PST882A360NR	PST882A360UR	PST882A360RL
		200ms	PST873A360NR	PST873A360UR	PST873A360RL	PST883A360NR	PST883A360UR	PST883A360RL
3.70V	±1.5%	20ms	PST870A370NR	PST870A370UR	PST870A370RL	PST880A370NR	PST880A370UR	PST880A370RL
		50ms	PST871A370NR	PST871A370UR	PST871A370RL	PST881A370NR	PST881A370UR	PST881A370RL
		100ms	PST872A370NR	PST872A370UR	PST872A370RL	PST882A370NR	PST882A370UR	PST882A370RL
		200ms	PST873A370NR	PST873A370UR	PST873A370RL	PST883A370NR	PST883A370UR	PST883A370RL
3.80V	±1.5%	20ms	PST870A380NR	PST870A380UR	PST870A380RL	PST880A380NR	PST880A380UR	PST880A380RL
		50ms	PST871A380NR	PST871A380UR	PST871A380RL	PST881A380NR	PST881A380UR	PST881A380RL
		100ms	PST872A380NR	PST872A380UR	PST872A380RL	PST882A380NR	PST882A380UR	PST882A380RL
		200ms	PST873A380NR	PST873A380UR	PST873A380RL	PST883A380NR	PST883A380UR	PST883A380RL
3.90V	±1.5%	20ms	PST870A390NR	PST870A390UR	PST870A390RL	PST880A390NR	PST880A390UR	PST880A390RL
		50ms	PST871A390NR	PST871A390UR	PST871A390RL	PST881A390NR	PST881A390UR	PST881A390RL
		100ms	PST872A390NR	PST872A390UR	PST872A390RL	PST882A390NR	PST882A390UR	PST882A390RL
		200ms	PST873A390NR	PST873A390UR	PST873A390RL	PST883A390NR	PST883A390UR	PST883A390RL
4.00V	±1.5%	20ms	PST870A400NR	PST870A400UR	PST870A400RL	PST880A400NR	PST880A400UR	PST880A400RL
		50ms	PST871A400NR	PST871A400UR	PST871A400RL	PST881A400NR	PST881A400UR	PST881A400RL
		100ms	PST872A400NR	PST872A400UR	PST872A400RL	PST882A400NR	PST882A400UR	PST882A400RL
		200ms	PST873A400NR	PST873A400UR	PST873A400RL	PST883A400NR	PST883A400UR	PST883A400RL
4.10V	±1.5%	20ms	PST870A410NR	PST870A410UR	PST870A410RL	PST880A410NR	PST880A410UR	PST880A410RL
		50ms	PST871A410NR	PST871A410UR	PST871A410RL	PST881A410NR	PST881A410UR	PST881A410RL
		100ms	PST872A410NR	PST872A410UR	PST872A410RL	PST882A410NR	PST882A410UR	PST882A410RL
		200ms	PST873A410NR	PST873A410UR	PST873A410RL	PST883A410NR	PST883A410UR	PST883A410RL
4.20V	±1.5%	20ms	PST870A420NR	PST870A420UR	PST870A420RL	PST880A420NR	PST880A420UR	PST880A420RL
		50ms	PST871A420NR	PST871A420UR	PST871A420RL	PST881A420NR	PST881A420UR	PST881A420RL
		100ms	PST872A420NR	PST872A420UR	PST872A420RL	PST882A420NR	PST882A420UR	PST882A420RL
		200ms	PST873A420NR	PST873A420UR	PST873A420RL	PST883A420NR	PST883A420UR	PST883A420RL
4.30V	±1.5%	20ms	PST870A430NR	PST870A430UR	PST870A430RL	PST880A430NR	PST880A430UR	PST880A430RL
		50ms	PST871A430NR	PST871A430UR	PST871A430RL	PST881A430NR	PST881A430UR	PST881A430RL
		100ms	PST872A430NR	PST872A430UR	PST872A430RL	PST882A430NR	PST882A430UR	PST882A430RL
		200ms	PST873A430NR	PST873A430UR	PST873A430RL	PST883A430NR	PST883A430UR	PST883A430RL
4.40V	±1.5%	20ms	PST870A440NR	PST870A440UR	PST870A440RL	PST880A440NR	PST880A440UR	PST880A440RL
		50ms	PST871A440NR	PST871A440UR	PST871A440RL	PST881A440NR	PST881A440UR	PST881A440RL
		100ms	PST872A440NR	PST872A440UR	PST872A440RL	PST882A440NR	PST882A440UR	PST882A440RL
		200ms	PST873A440NR	PST873A440UR	PST873A440RL	PST883A440NR	PST883A440UR	PST883A440RL
4.50V	±1.5%	20ms	PST870A450NR	PST870A450UR	PST870A450RL	PST880A450NR	PST880A450UR	PST880A450RL
		50ms	PST871A450NR	PST871A450UR	PST871A450RL	PST881A450NR	PST881A450UR	PST881A450RL
		100ms	PST872A450NR	PST872A450UR	PST872A450RL	PST882A450NR	PST882A450UR	PST882A450RL
		200ms	PST873A450NR	PST873A450UR	PST873A450RL	PST883A450NR	PST883A450UR	PST883A450RL

Downloaded from Arrow.com.

CMOS system reset IC built-in delay time circuit

PST803 - 810 Series

Outline

These IC series are a system reset IC built-in delay time circuit.
The IC is a small space on PCB by no external capacitor and small package.
The IC is compatible with a standard Reset PST809 ***series***, and can choose a detective voltage at 0.1V steps.

Applications

(1) The reset circuits of CPU and MPU
(2) The reset circuits of logic circuit.
(3) Battery voltage check circuits
(4) The change circuit of a backup circuits
(5) Level detection circuits
(6) Level detector

Features (Unless otherwise specified, Ta=+25°C)

(1) Operating supply voltage....1.0V to 6.0V (Ta=0°C to 70°C)
(2) Supply current.....0.5μA typ.
(3) Reset threshold range.....1.6V to 5.0V
(2.63V/2.93V/3.08V/4.38V/4.63V)
(4) Reset threshold accuracy ...±1.0%
(5) Reset temperature coefficient
30ppm/°C typ.
(6) Reset active timeout period 50/100/200/240/400ms
(7) Output voltage L .....0.4V max. (Isink=3.2mA)
(8) Output voltage H.....VDD−1.5V min. (Isource=800μA)
(9) Output type
Open drain output + Active L: PST803 , PST805
Open drain output + Active H: PST804 , PST806
CMOS output + Active L : PST807 , PST809
CMOS output + Active H : PST808 , PST810

Pin assignment

SOT-23A

(Top view)

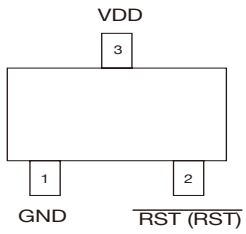

PST803,PST804,PST809,PST810

SOT-23A

(Top view)

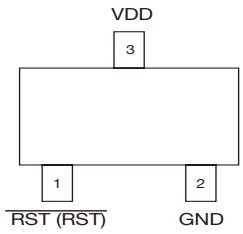

PST805,PST806,PST807,PST808

Model name structure

P S T 8 □ □ A □ □ □ N □

a b c d

a		b		c		d	
Output Type		delay time rank		Detection voltage rank		Packing Specification	
03	Open Drain output Active-Low	A	240ms	160	VDET=1.60V	M	R Housing Halogen free
04	Open Drain output Active-High	B	50ms	|	|	H	L Housing Halogen free
05	Open Drain output Active-Low	C	100ms	500	VDET=5.00V	R	R Housing Halogen contained Product
06	Open Drain output Active-High	D	200ms	-	-	L	L Housing Halogen contained Product
07	CMOS output Active-Low	E	400ms				
08	CMOS output Active-High						
09	CMOS output Active-Low						
10	CMOS output Active-High						

Downloaded from Arrow.com.

Selection guide

The examples of PST809 are shown below.

3,000pcs/Reel

Detection Voltage	delay time (typ.)	CMOS outputActive-LowSOT-23A Package	Detection Voltage	delay time (typ.)	CMOS outputActive-LowSOT-23A Package	Detection Voltage	delay time (typ.)	CMOS outputActive-LowSOT-23A Package
1.60V	240ms	PST809A160NM	3.00V	240ms	PST809A300NM	4.40V	240ms	PST809A440NM
	50ms	PST809B160NM		50ms	PST809B300NM		50ms	PST809B440NM
	100ms	PST809C160NM		100ms	PST809C300NM		100ms	PST809C440NM
	200ms	PST809D160NM		200ms	PST809D300NM		200ms	PST809D440NM
	400ms	PST809E160NM		400ms	PST809E300NM		400ms	PST809E440NM
1.70V	240ms	PST809A170NM	3.10V	240ms	PST809A310NM	4.50V	240ms	PST809A450NM
	50ms	PST809B170NM		50ms	PST809B310NM		50ms	PST809B450NM
	100ms	PST809C170NM		100ms	PST809C310NM		100ms	PST809C450NM
	200ms	PST809D170NM		200ms	PST809D310NM		200ms	PST809D450NM
	400ms	PST809E170NM		400ms	PST809E310NM		400ms	PST809E450NM
1.80V	240ms	PST809A180NM	3.20V	240ms	PST809A320NM	4.60V	240ms	PST809A460NM
	50ms	PST809B180NM		50ms	PST809B320NM		50ms	PST809B460NM
	100ms	PST809C180NM		100ms	PST809C320NM		100ms	PST809C460NM
	200ms	PST809D180NM		200ms	PST809D320NM		200ms	PST809D460NM
	400ms	PST809E180NM		400ms	PST809E320NM		400ms	PST809E460NM
1.90V	240ms	PST809A190NM	3.30V	240ms	PST809A330NM	4.70V	240ms	PST809A470NM
	50ms	PST809B190NM		50ms	PST809B330NM		50ms	PST809B470NM
	100ms	PST809C190NM		100ms	PST809C330NM		100ms	PST809C470NM
	200ms	PST809D190NM		200ms	PST809D330NM		200ms	PST809D470NM
	400ms	PST809E190NM		400ms	PST809E330NM		400ms	PST809E470NM
2.00V	240ms	PST809A200NM	3.40V	240ms	PST809A340NM	4.80V	240ms	PST809A480NM
	50ms	PST809B200NM		50ms	PST809B340NM		50ms	PST809B480NM
	100ms	PST809C200NM		100ms	PST809C340NM		100ms	PST809C480NM
	200ms	PST809D200NM		200ms	PST809D340NM		200ms	PST809D480NM
	400ms	PST809E200NM		400ms	PST809E340NM		400ms	PST809E480NM
2.10V	240ms	PST809A210NM	3.50V	240ms	PST809A350NM	4.90V	240ms	PST809A490NM
	50ms	PST809B210NM		50ms	PST809B350NM		50ms	PST809B490NM
	100ms	PST809C210NM		100ms	PST809C350NM		100ms	PST809C490NM
	200ms	PST809D210NM		200ms	PST809D350NM		200ms	PST809D490NM
	400ms	PST809E210NM		400ms	PST809E350NM		400ms	PST809E490NM
2.20V	240ms	PST809A220NM	3.60V	240ms	PST809A360NM	5.00V	240ms	PST809A500NM
	50ms	PST809B220NM		50ms	PST809B360NM		50ms	PST809B500NM
	100ms	PST809C220NM		100ms	PST809C360NM		100ms	PST809C500NM
	200ms	PST809D220NM		200ms	PST809D360NM		200ms	PST809D500NM
	400ms	PST809E220NM		400ms	PST809E360NM		400ms	PST809E500NM
2.30V	240ms	PST809A230NM	3.70V	240ms	PST809A370NM	2.63V	240ms	PST809A263NM
	50ms	PST809B230NM		50ms	PST809B370NM		50ms	PST809B263NM
	100ms	PST809C230NM		100ms	PST809C370NM		100ms	PST809C263NM
	200ms	PST809D230NM		200ms	PST809D370NM		200ms	PST809D263NM
	400ms	PST809E230NM		400ms	PST809E370NM		400ms	PST809E263NM
2.40V	240ms	PST809A240NM	3.80V	240ms	PST809A380NM	2.93V	240ms	PST809A293NM
	50ms	PST809B240NM		50ms	PST809B380NM		50ms	PST809B293NM
	100ms	PST809C240NM		100ms	PST809C380NM		100ms	PST809C293NM
	200ms	PST809D240NM		200ms	PST809D380NM		200ms	PST809D293NM
	400ms	PST809E240NM		400ms	PST809E380NM		400ms	PST809E293NM
2.50V	240ms	PST809A250NM	3.90V	240ms	PST809A390NM	3.08V	240ms	PST809A308NM
	50ms	PST809B250NM		50ms	PST809B390NM		50ms	PST809B308NM
	100ms	PST809C250NM		100ms	PST809C390NM		100ms	PST809C308NM
	200ms	PST809D250NM		200ms	PST809D390NM		200ms	PST809D308NM
	400ms	PST809E250NM		400ms	PST809E390NM		400ms	PST809E308NM
2.60V	240ms	PST809A260NM	4.00V	240ms	PST809A400NM	4.38V	240ms	PST809A438NM
	50ms	PST809B260NM		50ms	PST809B400NM		50ms	PST809B438NM
	100ms	PST809C260NM		100ms	PST809C400NM		100ms	PST809C438NM
	200ms	PST809D260NM		200ms	PST809D400NM		200ms	PST809D438NM
	400ms	PST809E260NM		400ms	PST809E400NM		400ms	PST809E438NM
2.70V	240ms	PST809A270NM	4.10V	240ms	PST809A410NM	4.63V	240ms	PST809A463NM
	50ms	PST809B270NM		50ms	PST809B410NM		50ms	PST809B463NM
	100ms	PST809C270NM		100ms	PST809C410NM		100ms	PST809C463NM
	200ms	PST809D270NM		200ms	PST809D410NM		200ms	PST809D463NM
	400ms	PST809E270NM		400ms	PST809E410NM		400ms	PST809E463NM
2.80V	240ms	PST809A280NM	4.20V	240ms	PST809A420NM			
	50ms	PST809B280NM		50ms	PST809B420NM			
	100ms	PST809C280NM		100ms	PST809C420NM			
	200ms	PST809D280NM		200ms	PST809D420NM			
	400ms	PST809E280NM		400ms	PST809E420NM			
2.90V	240ms	PST809A290NM	4.30V	240ms	PST809A430NM			
	50ms	PST809B290NM		50ms	PST809B430NM			
	100ms	PST809C290NM		100ms	PST809C430NM			
	200ms	PST809D290NM		200ms	PST809D430NM			
	400ms	PST809E290NM		400ms	PST809E430NM			

Please refer to "Model name structure" and contact us for other series (PST803 to PST810).

Downloaded from Arrow.com.

Downloaded from Arrow.com.

4 DISCONTINUATION INFOMATION

4 Products to be discontinued

The following products will be phased out or discontinued.
Please note that we will no longer accept any new enquires.

Part Number	Function
LAG665	Stereo Head Phone IC
LAG668	Stereo Head Phone IC
LMF501	Radio receiver IC
LVA519	Synchronous Detector IC
MM1021	Synchronous Detector IC
MM1024	Video amplifier IC for superimpose
MM1025	DRAM Back-up IC
MM1026, 1245	Battery Back-up IC
MM1027	SRAM Back-up IC
MM1028	SRAM Back-up IC
MM1029	Video amplifier IC for superimpose
MM1031	Video Amplifier IC
MM1034	HBS-Compatible Driver and Receiver
MM1035	Watchdog Timer IC
MM1038	Motor control IC
MM1041	Video Amplifier IC
MM1053	Video Switch IC
MM1060	3-Terminal regulator IC
MM1065, 1165	3-Terminal regulator IC
MM1067	Sync Separator + Sync detector IC
MM1069	Sync Separator + Sync detector IC
MM1075	Watchdog Timer IC
MM1081	SRAM Back-up IC
MM1093	4fsc Clock Generator
MM1095	Watchdog Timer IC
MM1096	Watchdog Timer IC
MM1099	Watchdog Timer IC
MM1100	COMPANDOR
MM1106	Watchdog Timer and Battery Back-up IC
MM1108	Synchronous Separator IC
MM1109	Synchronous Separator IC
MM1111~1118	Video Switch IC
MM1120	Video Switch IC
MM1124	Video Switch IC
MM1134	Battery Back-up IC
MM1135, 1136	Watchdog Timer IC
MM1140	Video Switch IC
MM1142	Watchdog Timer IC
MM1166	Video amplifier IC for superimpose
MM1177	Charge control for Coin-type Battery

Part Number	Function
MM1180, 1181	Regulator IC
MM1185	Watchdog Timer IC
MM1186	75Ω driver IC
MM1188	Video Switch IC
MM1196	75Ω driver IC
MM1203	Video Amplifier IC
MM1207, 1205	Video Amplifier IC
MM1206	Voltage Detector IC
MM1210	Voltage Detector IC
MM1215, 1216	Regulator IC
MM1217	Flame Detection Amplifier
MM1222~1224	75Ω driver IC
MM1225~1228	75Ω driver IC
MM1231~1234	Video Switch IC
MM1238	Video Switch IC
MM1251, 1252, 1253	Voltage Detector IC
MM1257	3-Terminal regulator IC
MM1268	RGB Encoder
MM1278	Dual OP-AMP
MM1288	TFT Liquid Crystal Interface IC
MM1290	Battery Back-up IC
MM1291	Li-ion Battery protection IC for 1cell
MM1292, 1302	Li-ion Battery protection IC for 2cells
MM1293	Li-ion Battery protection IC for 3cells
MM1294	Li-ion Battery protection IC for 4cells
MM1304	VCA with LPF of Y system and BPF of C system
MM1305	Voltage Detector IC
MM1311	Video Switch IC for I^2C BUS
MM1320	3-Terminal regulator IC
MM1327	Wide Video Detection IC
MM1331	DC-DC convertor IC
MM1332	Li-ion Battery protection IC for 1cell
MM1349	Switching Regulator IC
MM1357	Switching Regulator IC
MM1369	Q sound IC
MM1377, 1378	OP-AMP and Shunt Regulator
MM1381, 1382, 1383	Video Amplifier IC
MM1389	Video Switch IC
MM1426	Regulator IC
MM1437	Regulator and System Reset IC

Downloaded from Arrow.com.

The following products will be phased out or discontinued.
Please note that we will no longer accept any new enquires.

Part Number	Function
MM159x	Regulator IC
MM1002	Video amplifier IC for superimpose
MM6558	Dual OP-AMP
MM6564	Dual OP-AMP
PST518	System Reset IC
PST523	System Reset IC
PST529	System Reset IC
PST531	System Reset IC
PST572	System Reset IC
PST573	System Reset IC (Active-High)
PST574	System Reset IC
PST575	System Reset IC
PST591~595	System Reset IC (built-in delay circuit)
PST600	System Reset IC
PST611	System Reset IC
PST620,621	System Reset IC
PST623	System Reset IC
PST70xx	System Reset IC
PST7512,7801	Second Protect IC
PST90xx	System Reset IC
MM1270	Regulator IC
MM1301	Li-ion Battery protection IC for 1cell
MM1336	Stereo Headphones IC
MM1376	Stereo Headphones IC
MM1407	Audio IC
MM1421	Li-ion Battery protection IC for 1cell
MM1448	Composite regulator IC
MM1516	Composite regulator IC
MM1529	Secondary-side control for AC Adaptor
MM3042~3045	Regulator IC
MM3051~3055	Regulator IC
MM3002	OP-AMP
MM1581	Lithium-Ion Battery Charge Control IC
MM309x, MM310x	Regulator IC(150mA)

The information shown here is current as of February 2013.

Downloaded from Arrow.com.

4 Phased Out Products

The following products will be phased out or discontinued.
Please note that we will no longer accept any new enquires.
For customers who currently use the products, please contact your distributors for details on user support.

Part Number	Function
MM1333	Lithium-Ion Battery Charge Control IC
MM1373	Second Protect IC
MM1375	RGB Video Amplifier
MM1385	Regulator IC (150mA)
MM1412	Li-ion Battery protection IC for 2cells
MM1424	TCXO IC
MM1434	QXPANDER
MM1422, MM1423 MM1442, MM1443	I²C Bus Controlled 4-input 3-output AV Switch
MM1451	Second Protect IC
MM1478	Regulator IC+System Reset IC
MM1481	Regulator IC+System Reset IC
MM1482	Regulator IC+System Reset IC
MM1491	Li-ion Battery protection IC for 1cell
MM1492	I²C BUS Controlled 5-Input 2-Output AV Switch
MM1495	I²C BUS Control 5-Input 2-Output AV Switch
MM1519	Component Input Video Swich with I²C Bus
MM1522	Linear Temperature Sensor
MM1532	Lithium-Ion Battery Charge Control IC
MM1539	Video Signal Driver for DVD Players
MM1566	Video Signal Driver for DVD Players
MM157x	Regulator IC (150mA)
MM1616	Visibility Correction Light Sensor
MM1623, MM1758	Video Signal Driver for DVD Players
MM1630	I²C Bus Control Broadband Video Switch
MM1699	I²C Bus Control 13-Input 4-Output Audio Switch
MM3005~3010	CMOS Switching Regulator IC
MM302x	Regulator IC (60mA)
MM303x	Regulator IC (100mA)
PST93xx	System Reset IC
PST993,PST994	System Reset IC
MM1433	Lithium-Ion Battery Charge Control IC
PST37xx	System Reset IC
PST38xx	System Reset IC
MM1485	Lithium-Ion Battery Charge Control IC
MM1530A	Shunt Regulator
MM1538	Motor Driver IC
MM1469	Motor Driver IC
MM1669	Motor Driver IC
MM1779	PD IC for DVD Players
MM1567	Video Signal Driver for DVD
MM1568	Video Signal Driver for DVD
MM156x	Regulator IC (500mA)
MM1631	I²Cbus controlled audio switch
MM1687	Regulator IC+System Reset IC
MM1688	Regulator IC+System Reset IC
MM1689	Regulator IC (2ch)

Part Number	Function
MM1692	Video Signal Driver for DVD
MM1697	Video Switch IC
MM1707	Lithium-Ion Battery Charge Control IC
MM1729	PDIC for CD
MM1730	PDIC for DVD
MM1731~MM1734	Video Switch IC
MM1746	PDIC for CD
MM1756	Video Driver IC
MM1757	HD-Compatible Video Driver IC
MM1763	AV Switch+75Ω Driver IC
MM1764	AV Switch+75Ω Driver IC
MM1783	Video Switch IC
MM1788	Video Driver IC
MM1792	Regulator IC (3ch)
MM1793	Video Switch IC
MM1794	Video Driver IC
MM1797	HD-Compatible 75Ω Driver IC
MM192x	Regulator IC(1A)
MM3018	Regulator IC+System Reset IC
MM3090	Li-ion Battery protection IC for 1cell
MM3099	Li-ion Battery protection IC for 1cell
MM3112	Li-ion Battery protection IC for 2cells
MM3113	Li-ion Battery protection IC for 3cells
MM3114	Li-ion Battery protection IC for 4cells
MM314x	Regulator IC (150mA)
MM3168	VCXO IC
MM3173, MM3174	Regulator IC+System Reset IC
MM3188	Temperature Switch IC
MM329x	Regulator IC (300mA)
PST31xx	System Reset IC
PST32xx	System Reset IC
PST33xx	System Reset IC
PST34xx	System Reset IC
PST92xx	System Reset IC
MM1414	Protection for Lithium-Ion Batteries (3~4 cells)
MM1636	Video Driver IC
PST35xx	System Reset IC (external capacitor)
PST36xx	System Reset IC (external capacitor)
PST41xAxxx	Reset IC with Built-In Delay Circuit
PST42xAxxx	Reset IC with Built-In Delay Circuit
PST43xAxxx	Reset IC with Built-In Delay Circuit
PST44xAxxx	Reset IC with Built-In Delay Circuit
MM3204	Lithium-Ion Battery Charge Control IC

The information shown here is current as of February 2013.

Downloaded from Arrow.com.

Downloaded from Arrow.com.

5 PACKAGE

5 Packsge Line-up

Package Type	Pin Count	Package Name	Package Size (mm)			Pin Pitch (mm)	Refer Number
			He	D	A	C	
Lead-through Type	3	TO-92A	5.40	3.80	7.50	2.50	P.254
Flat Lead Type	6	SON-6A	3.00	1.60	0.80	0.50	P.238
	6	SON-6B	3.00	1.60	0.80	0.50	P.239
	6	SON-6C	2.00	1.60	0.55	0.50	P.239
	6	SON-6D	3.00	2.90	0.80	0.95	P.240
	5	SOT89-5A	4.25	4.50	1.50	1.50	P.246
Gullwing Type	4	SC-82ABA	2.10	2.00	0.95	1.30	P.237
	4	SC-82ABB	2.10	2.00	0.90	1.30	P.237
	6	SC-88A	2.10	2.00	0.90	0.65	P.238
	3	SOT-23A	2.80	2.90	1.15	1.90	P.244
	5	SOT-25A	2.80	2.90	1.15	0.95	P.244
	6	SOT-26A	2.80	2.90	1.15	0.95	P.245
	6	SOT-26B	2.80	2.90	1.15	0.95	P.245
	7	SOP-7B	6.20	5.00	1.55	1.27	P.240
	8	SOP-8C	6.20	5.20	1.55	1.27	P.241
	8	SOP-8D	6.20	5.00	1.55	1.27	P.241
	8	SOP-8J	6.00	5.02	1.65	1.27	P.242
	10	SOP-10A	6.20	5.00	1.55	1.00	P.242
	16	SOP-16B	6.20	10.20	1.55	1.27	P.243
	28	SOP-28B	9.90	17.60	1.85	1.27	P.243
	8	SSOP-8A	3.10	2.00	0.75	0.50	P.252
	24	SSOP-24B	7.80	10.20	1.90	0.80	P.252
	34	SSOP-34A	9.90	17.60	1.85	1.00	P.253
	36	SSOP-36A	7.80	15.00	1.90	0.80	P.253
	42	SSOP-42A	9.90	17.60	1.85	0.80	P.254
	8	TSOP-8A	3.10	2.00	0.75	0.50	P.256
	16	TSOP-16A	6.40	5.00	1.10	0.65	P.256
	16	TSOP-16B	6.40	5.00	1.10	0.65	P.257
	16	TSOP-16D	6.40	5.00	1.10	0.65	P.257
	20	TSOP-20A	6.40	6.50	1.10	0.65	P.258
	20	TSOP-20B	6.40	6.50	1.10	0.65	P.258
	20	TSOP-20D	6.40	6.50	1.10	0.65	P.259
	20	TSOP-20E	6.40	6.50	1.10	0.65	P.259
	20	TSOP-20F	6.40	6.50	1.20	0.65	P.260
	8	VSOP-8B	4.00	2.90	1.30	0.65	P.260
	8	VSOP-8C	4.00	2.95	1.30	0.65	P.261
	8	VSOP-8D	4.00	2.80	1.30	0.65	P.261
	24	VSOP-24A	7.60	7.90	1.25	0.65	P.262
	8	HSOP-8A	6.20	5.00	1.55	1.27	P.226
	8	HSOP-8C	6.20	5.00	1.55	1.27	P.226
	28	HSOP-28A	9.90	18.60	2.30	0.80	P.227
	28	HSOP-28C	9.90	17.60	1.90	0.80	P.227
	36	HSOP-36A	9.90	17.60	1.90	0.80	P.228
	64	QFP-64E	16.00	16.00	1.20	0.80	P.235
	80	QFP-80D	17.20	23.20	3.22	0.80	P.236
	100	QFP-100A	17.20	23.20	3.22	0.65	P.236
	3	TO-252C	9.90	6.60	2.30	2.30	P.255
	5	TO-252-5A	9.90	6.60	2.30	1.27	P.255

Downloaded from Arrow.com.

Package Type	Pin Count	Package Name	Package Size (mm)			Pin Pitch (mm)	Refer Number
			He	D	A	C	
Non-Lead Type	4	PLP-4A	1.00	1.00	0.60	0.65	P.228
	4	PLP-4B	1.60	1.20	0.60	0.60	P.229
	4	PLP-4-1228	2.85	1.25	0.58	0.48	P.229
	4	PLP-4-2140	4.00	2.10	0.48	0.75	P.230
	6	PLP-6A	2.00	1.80	0.60	0.50	P.230
	6	PLP-6C	1.20	1.20	0.60	0.40	P.231
	6	PLP-6F	1.50	1.50	0.60	0.50	P.231
	6	PLP-6-2130	3.00	2.10	0.60	0.60	P.232
	8	PLP-8E	1.20	1.60	0.60	0.40	P.232
	8	PLP-8F	3.00	2.00	0.60	0.50	P.233
	10	PLP-10A	2.50	2.70	0.60	0.50	P.233
	10	PLP-10D	3.00	3.00	0.60	0.50	P.234
	12	PLP-12A	4.00	2.90	0.60	0.40	P.234
	12	PLP-12B	3.00	3.00	0.60	0.50	P.235
	16	SQFN-16A	3.00	3.00	0.75	0.50	P.246
	24	SQFN-24A	4.00	4.00	0.75	0.50	P.247
	32	SQFN-32A	5.00	5.00	0.75	0.50	P.247
	4	SSON-4B	1.40	1.10	0.55	0.50	P.248
	6	SSON-6A	2.00	1.80	0.75	0.50	P.248
	6	SSON-6E	1.60	1.80	0.55	0.50	P.249
	6	SSON-6J	1.40	1.40	0.55	0.50	P.249
	6	SSON-6L	2.00	2.00	0.75	0.65	P.250
	8	SSON-8B	2.30	2.30	0.75	0.50	P.250
	8	SSON-8C	3.00	3.00	0.55	0.65	P.251
	10	SSON-10A	2.50	2.70	0.60	0.50	P.251
	6	WLCSP-6C	0.81	1.09	0.38	0.40	P.262
	9	WLCSP-9A	1.81	1.81	0.45	0.40	P.263
	20	WLCSP-20A	1.936	1.936	0.345	0.40	P.263
	25	WLCSP-25A	1.936	1.936	0.345	0.40	P.264
	48	WLCSP-48B	3.47	3.47	0.40	0.50	P.264

* Recommendation Land Pattern is a reference value. To design practically, correction(s) should be made for optimized dimensions considering the effects of the board type to be mounted, mount(soldering) method, type and coating thickness of cream solder.

Downloaded from Arrow.com.

5 PACKAGE

Unit: mm

Package Name	Dimentional Drawing	Recommended Land Pattern
HSOP-8A Scale: 4/1	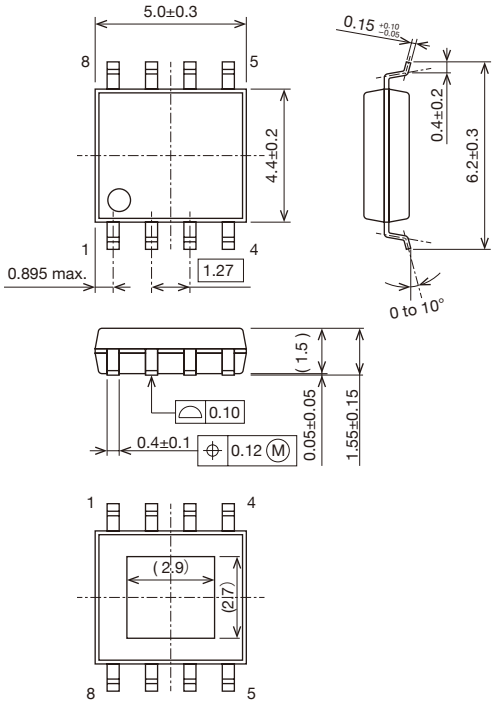	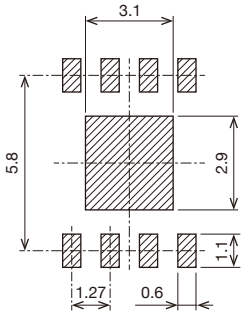
HSOP-8C Scale: 4/1	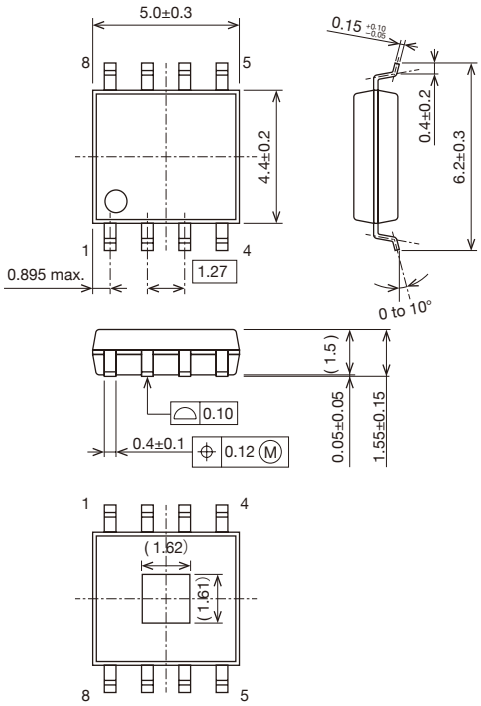	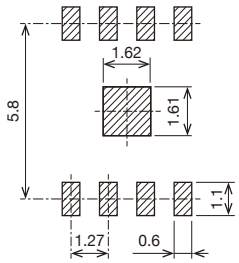

Downloaded from Arrow.com.

Unit: mm

Package Name	Dimentional Drawing	Recommended Land Pattern
HSOP-28A Scale: 2/1	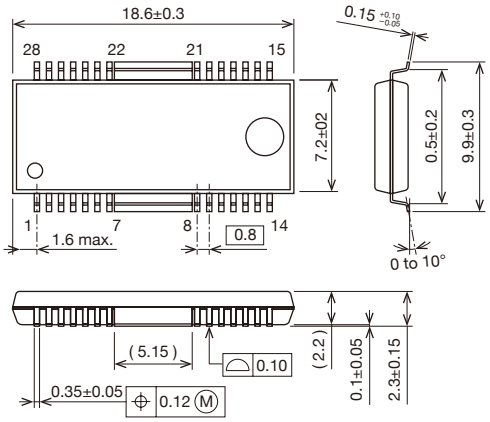	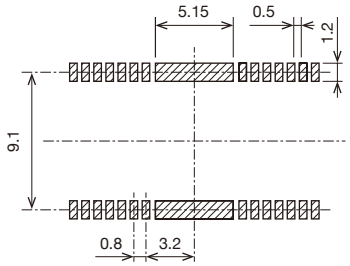
HSOP-28C Scale: 2/1	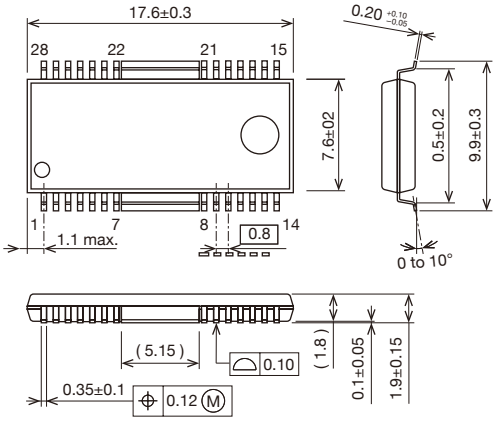	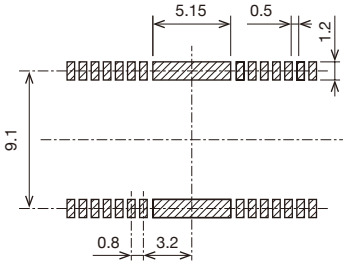

Downloaded from Arrow.com.

Unit: mm

Package Name	Dimentional Drawing	Recommended Land Pattern
HSOP-36A Scale: 2/1	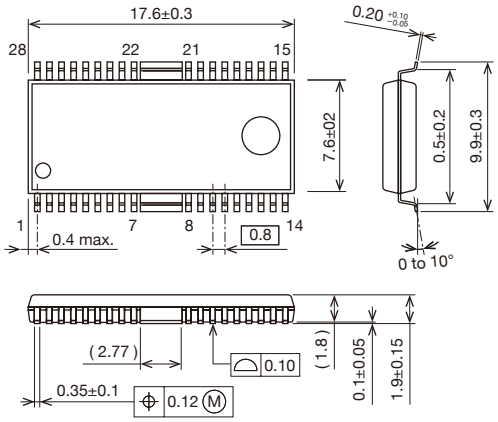	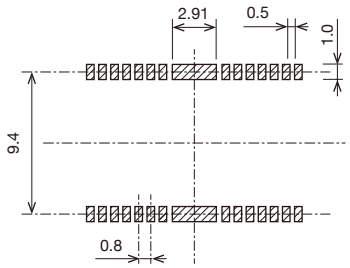
PLP-4A Scale: 20/1	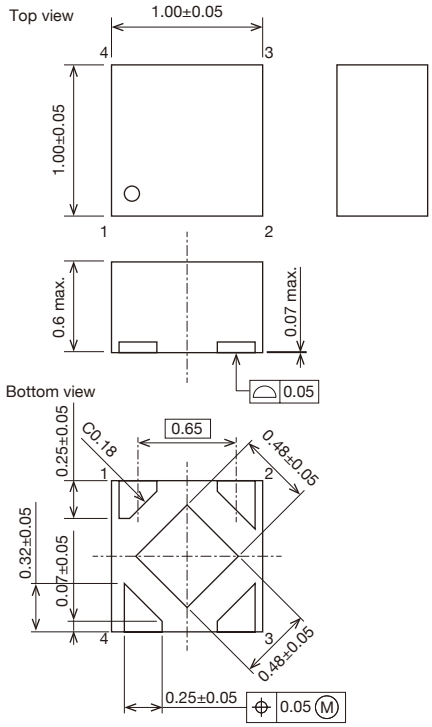	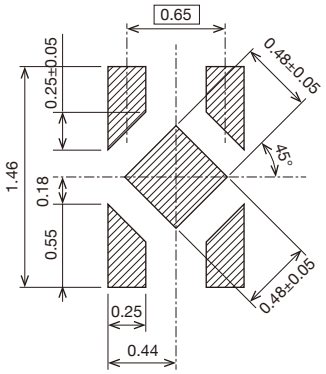

Downloaded from Arrow.com.

Unit: mm

Package Name	Dimentional Drawing	Recommended Land Pattern
PLP-4B Scale: 10/1	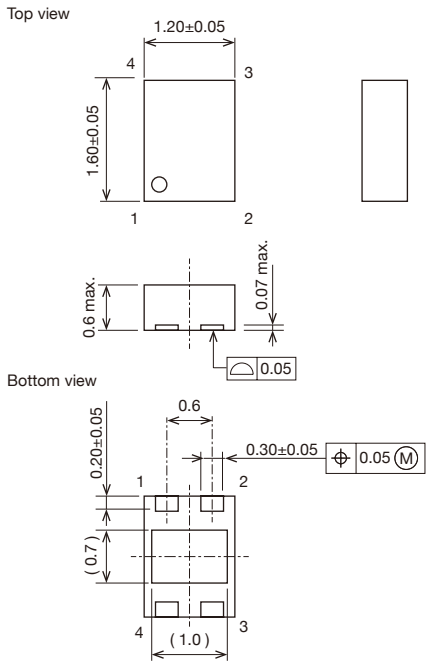	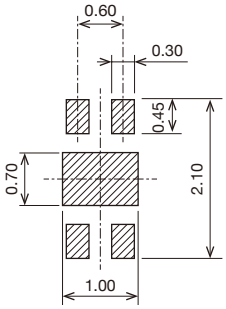
PLP-4-1228 Scale: 10/1	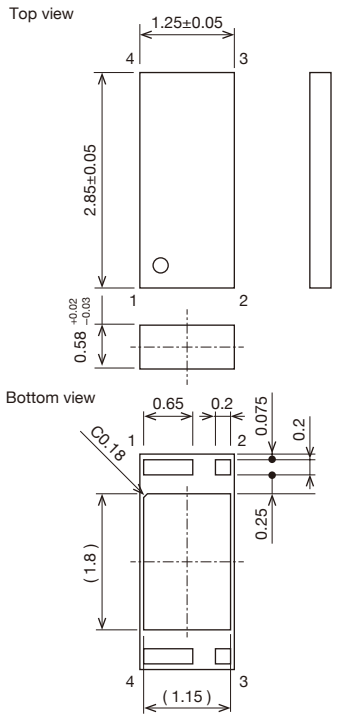	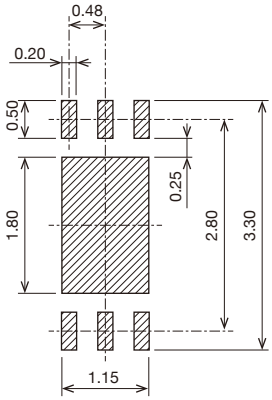

Downloaded from Arrow.com.

Unit: mm

Package Name	Dimentional Drawing	Recommended Land Pattern
PLP-4-2140 Scale: 5/1	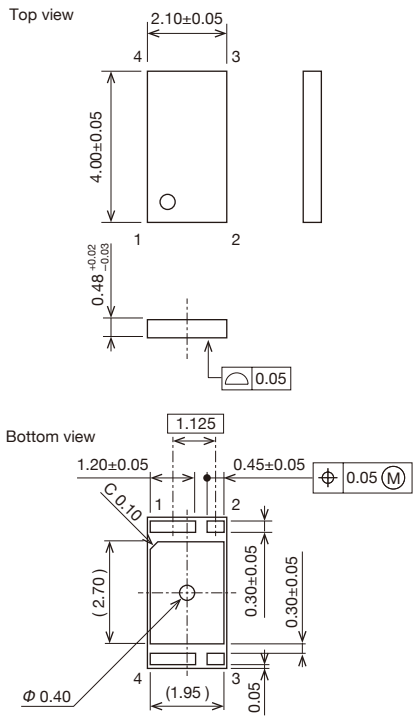	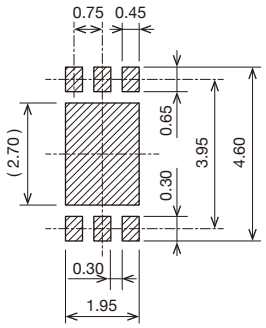
PLP-6A Scale: 10/1	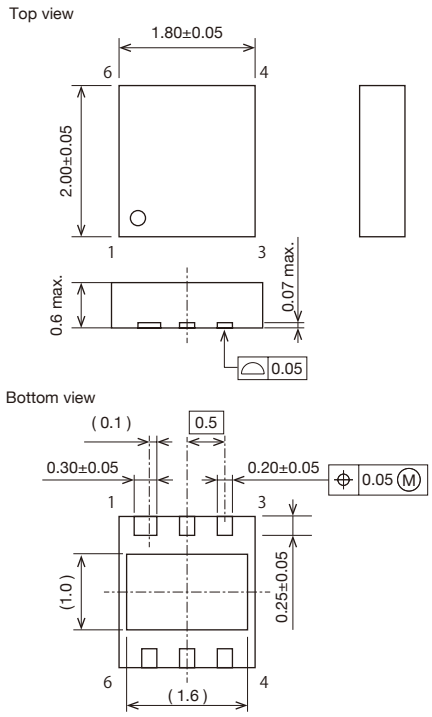	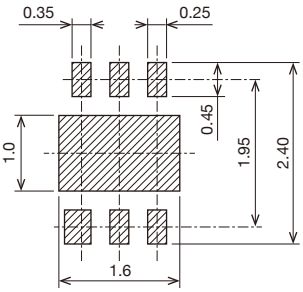

Downloaded from Arrow.com.

Unit: mm

Package Name	Dimentional Drawing	Recommended Land Pattern
PLP-6C Scale: 10/1	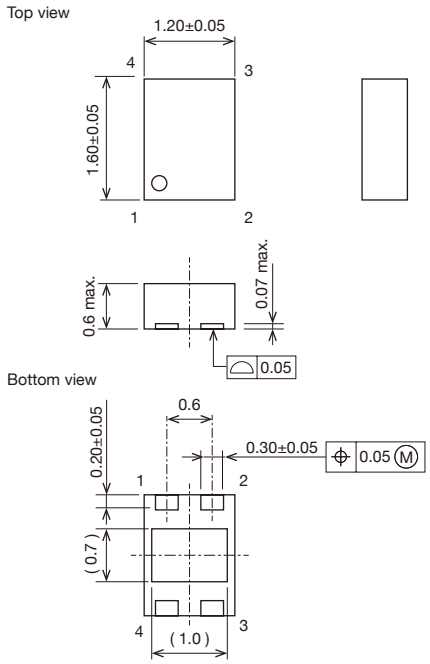	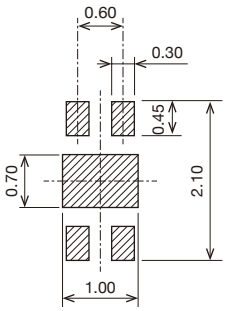
PLP-6F Scale: 10/1	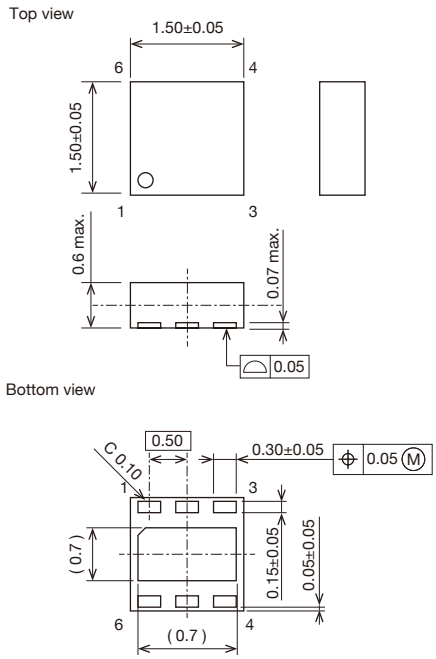	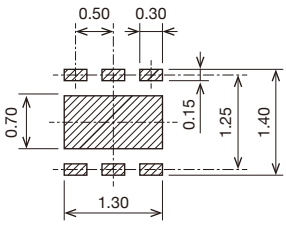

Downloaded from Arrow.com.

Unit: mm

Package Name	Dimentional Drawing	Recommended Land Pattern
PLP-6-2130 Scale: 5/1	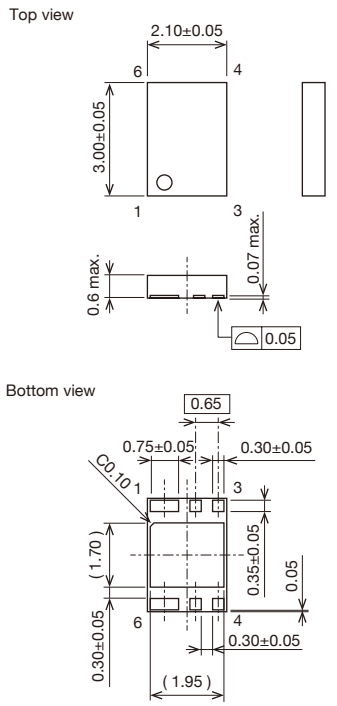	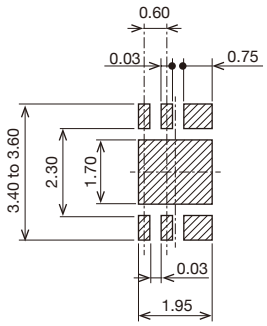
PLP-8E Scale: 10/1	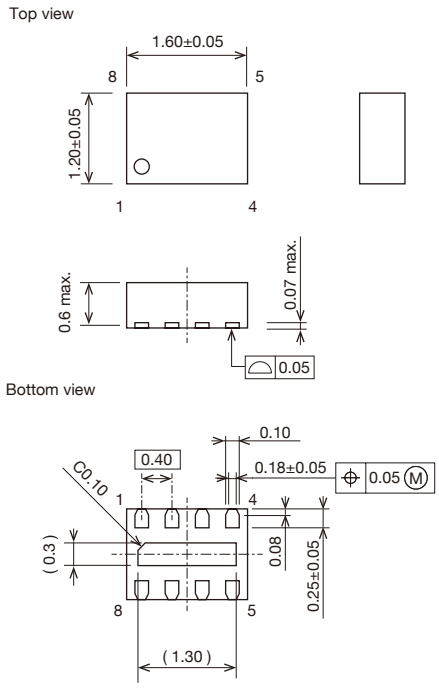	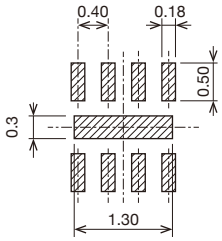

Downloaded from Arrow.com.

Unit: mm

Package Name	Dimentional Drawing	Recommended Land Pattern
PLP-8F Scale: 5/1	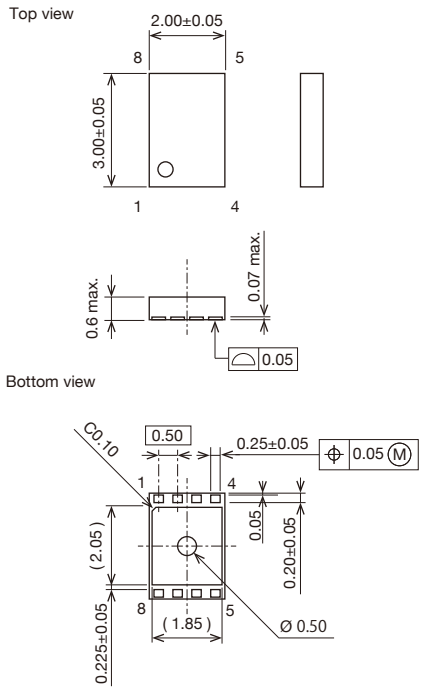	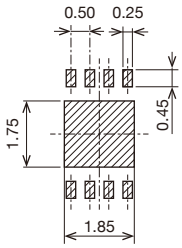
PLP-10A Scale: 5/1	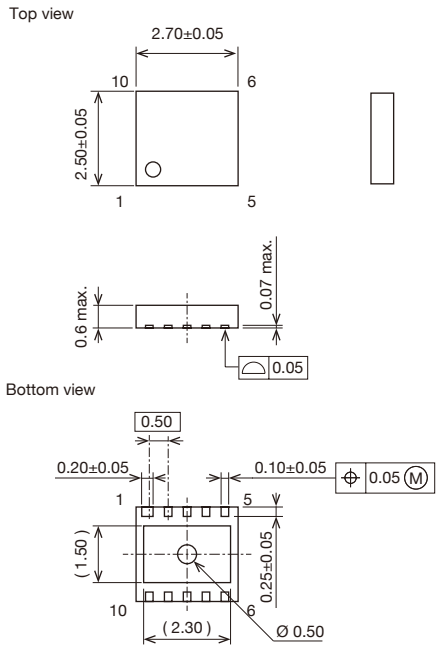	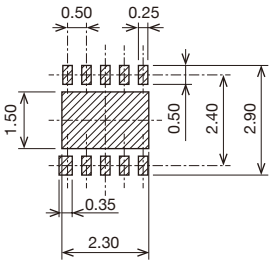

Downloaded from Arrow.com.

Unit: mm

Package Name	Dimentional Drawing	Recommended Land Pattern
PLP-10D Scale: 5/1	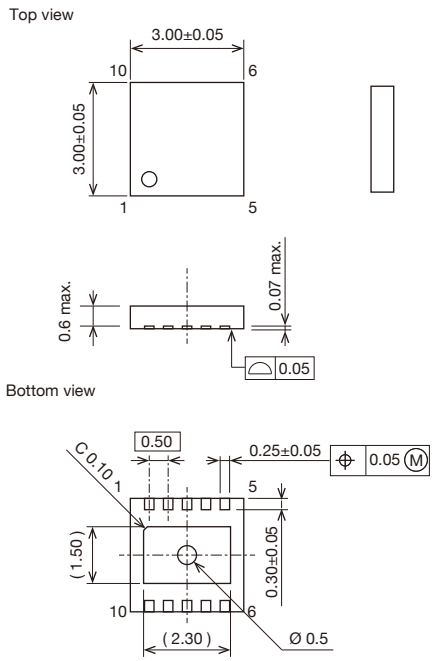	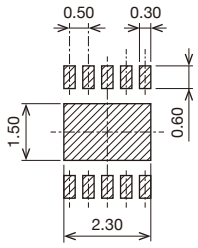
PLP-12A Scale: 5/1	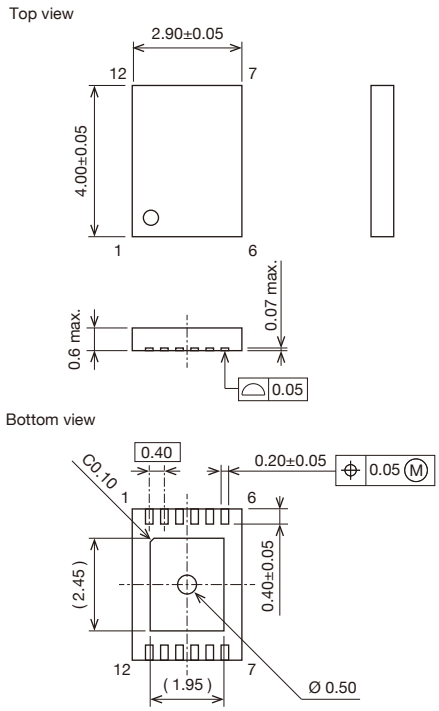	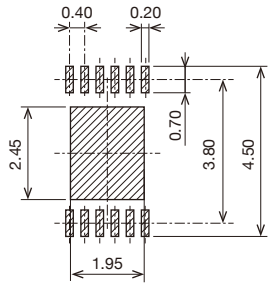

Downloaded from Arrow.com.

Unit: mm

Package Name	Dimentional Drawing	Recommended Land Pattern
PLP-12B Scale: 5/1	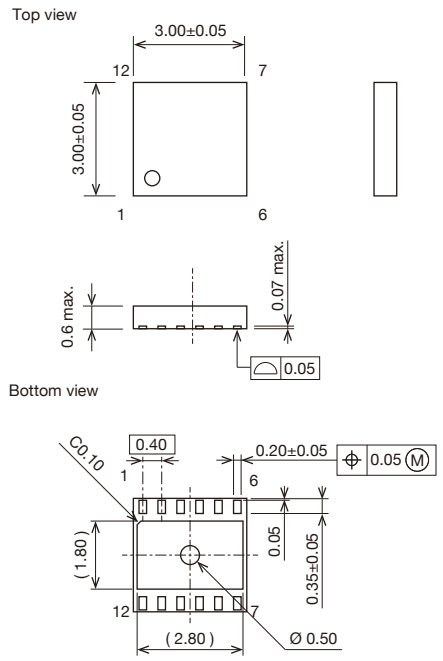	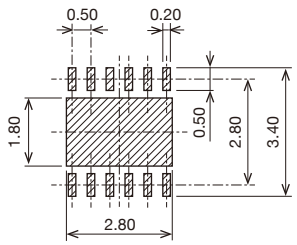
QFP-64E Scale: 2/1	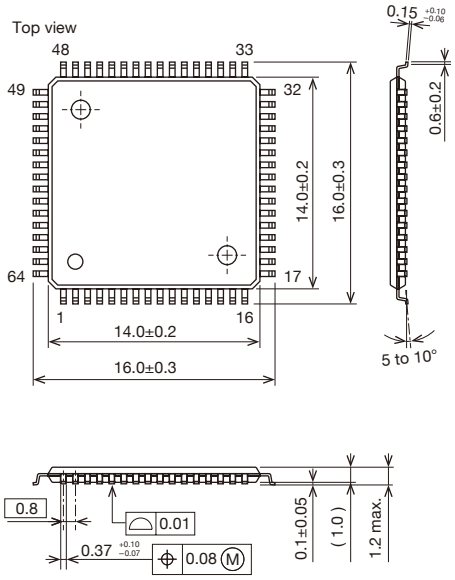	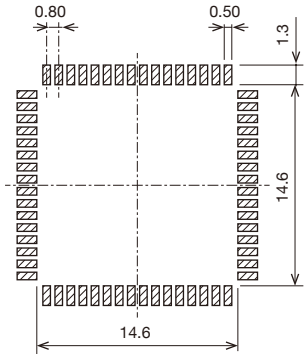

Downloaded from Arrow.com.

Unit: mm

Package Name	Dimentional Drawing	Recommended Land Pattern
QFP-80D Scale: 2/1	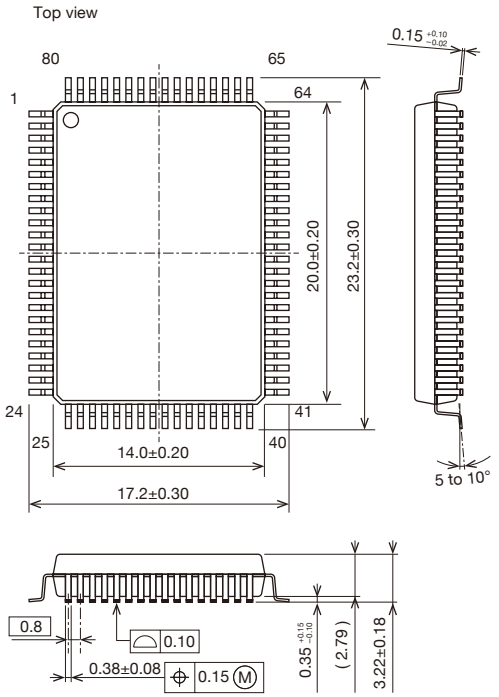	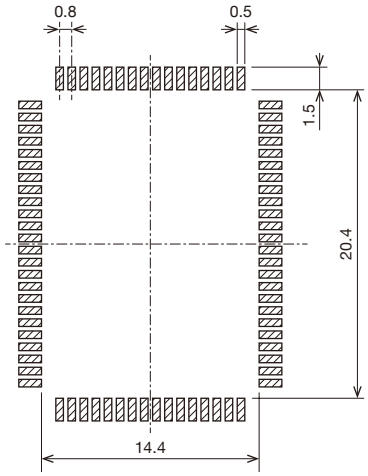
QFP-100A Scale: 2/1	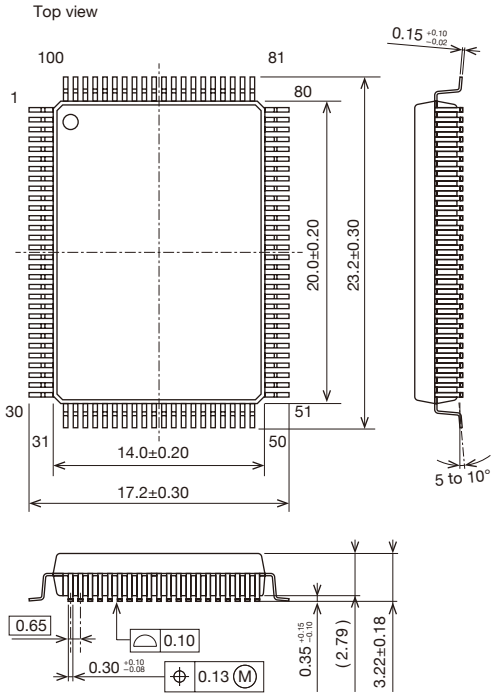	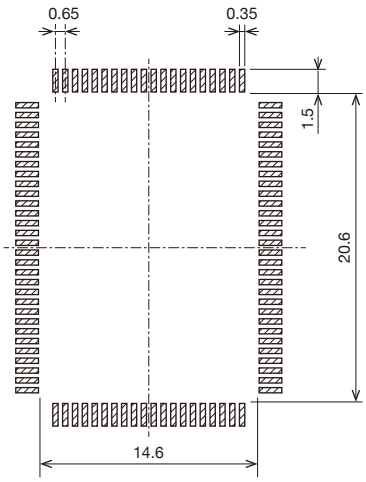

Downloaded from Arrow.com.

Unit: mm

Package Name	Dimentional Drawing	Recommended Land Pattern
SC-82ABA Scale: 5/1	Top view 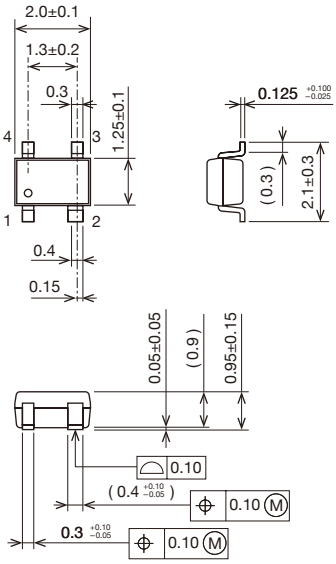	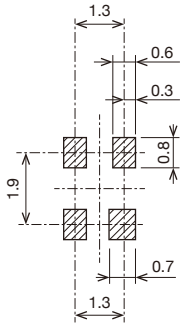
SC-82ABB Scale: 5/1	Top view 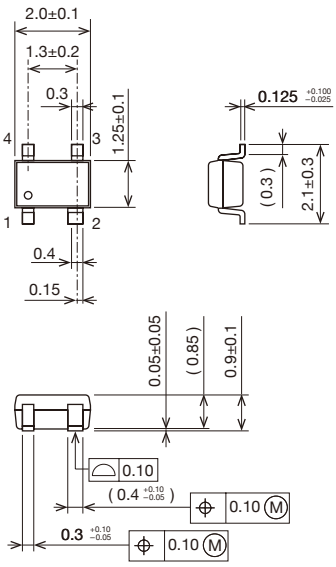	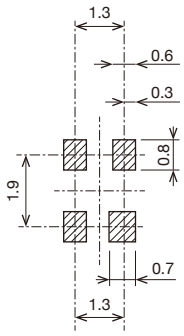

Downloaded from Arrow.com.

Unit: mm

Package Name	Dimentional Drawing	Recommended Land Pattern
SC-88A Scale: 5/1	Top view 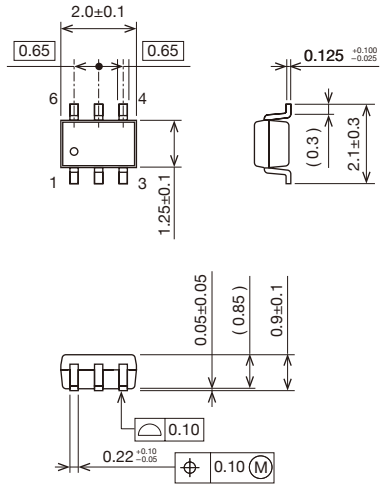	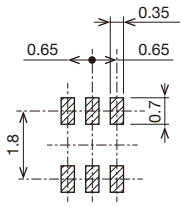
SON-6A Scale: 5/1	Top view 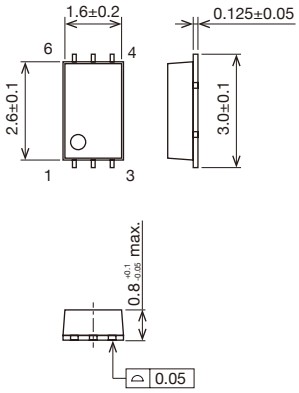 Bottom view 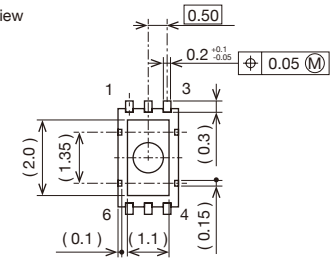	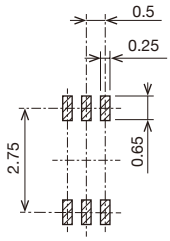

Downloaded from Arrow.com.

Unit: mm

Package Name	Dimentional Drawing	Recommended Land Pattern
SON-6B Scale: 5/1	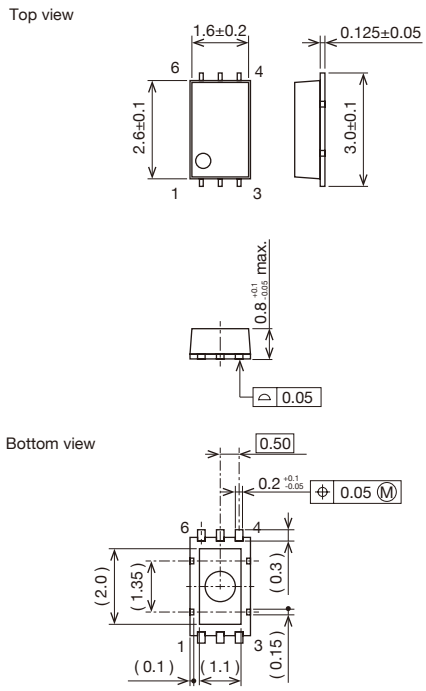	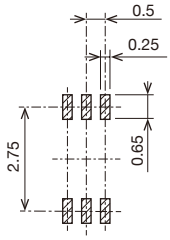
SON-6C Scale: 5/1	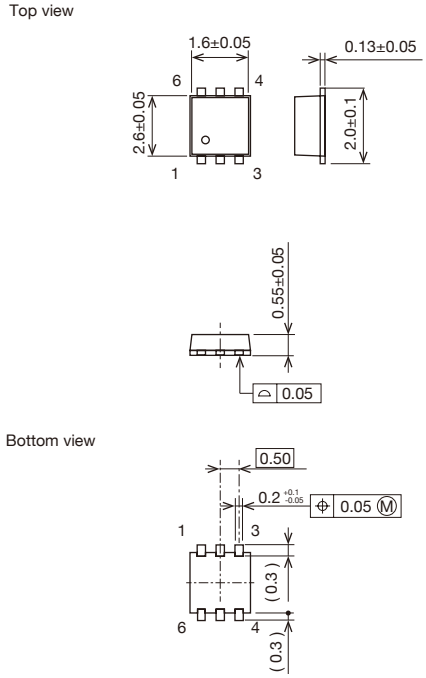	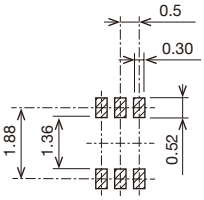

Downloaded from Arrow.com.

Unit: mm

Package Name	Dimentional Drawing	Recommended Land Pattern
SON-6D Scale: 5/1	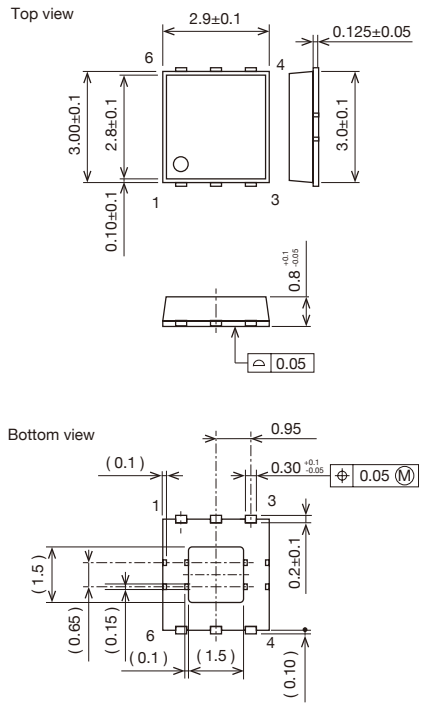	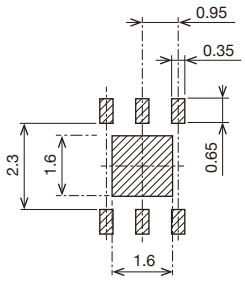
SOP-7B Scale: 5/1	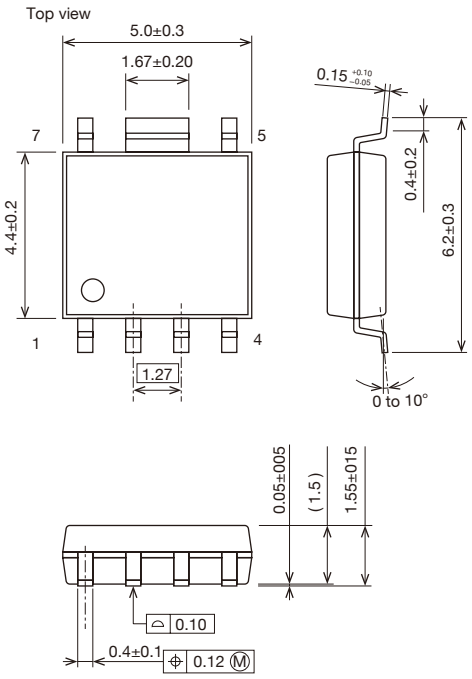	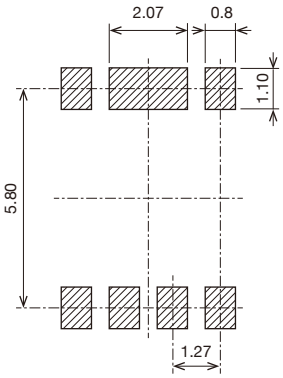

Downloaded from Arrow.com.

Unit: mm

Package Name	Dimentional Drawing	Recommended Land Pattern
SOP-8C Scale: 5/1	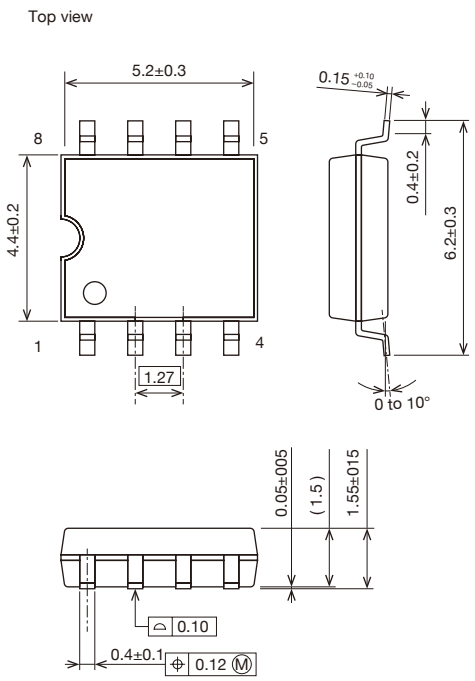	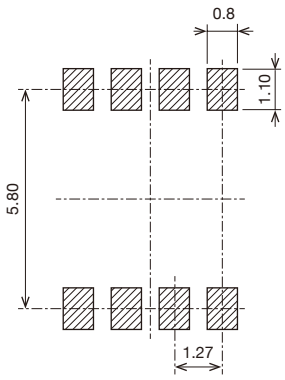
SOP-8D Scale: 5/1	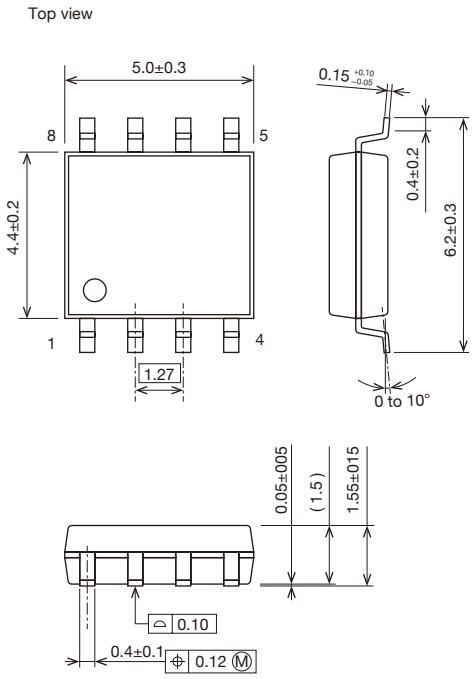	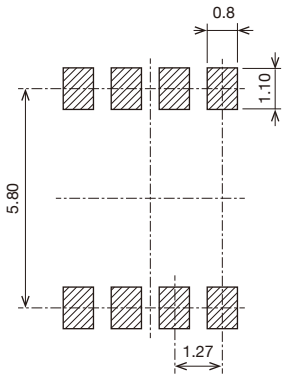

Downloaded from Arrow.com.

Unit: mm

Package Name	Dimentional Drawing	Recommended Land Pattern
SOP-8J Scale: 5/1	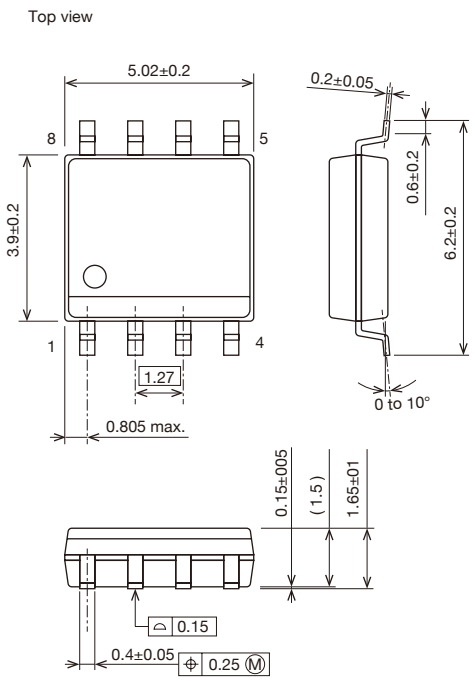	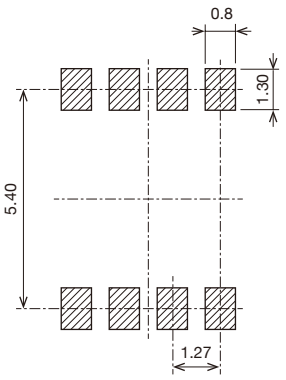
SOP-10A Scale: 5/1	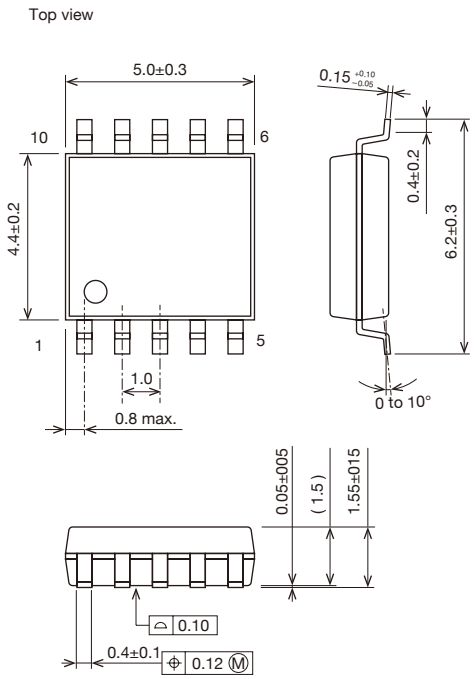	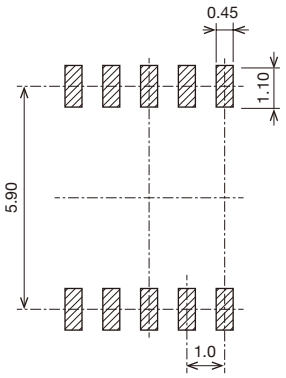

Downloaded from Arrow.com.

Unit: mm

Package Name	Dimentional Drawing	Recommended Land Pattern
SOP-16B Scale: 2/1	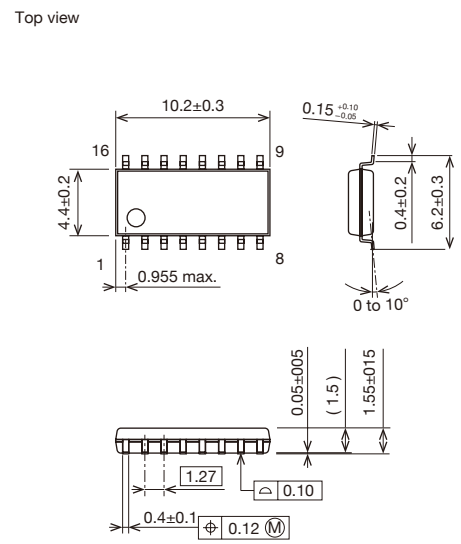	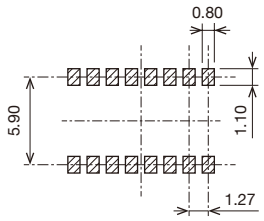
SOP-28B Scale: 2/1	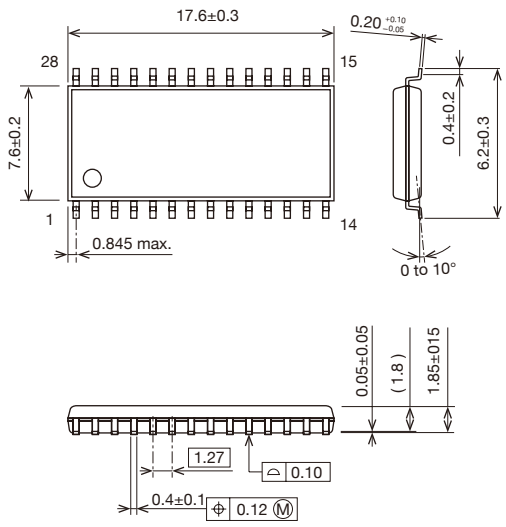	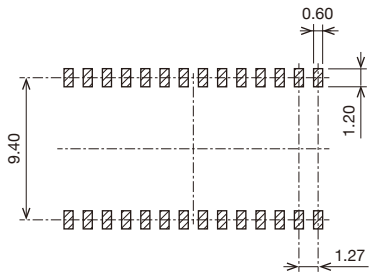

Downloaded from Arrow.com.

Unit: mm

Package Name	Dimentional Drawing	Recommended Land Pattern
SOT-23A Scale: 10/1	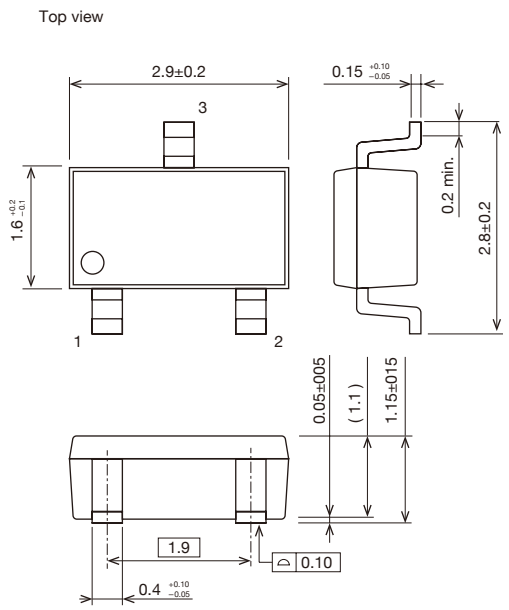	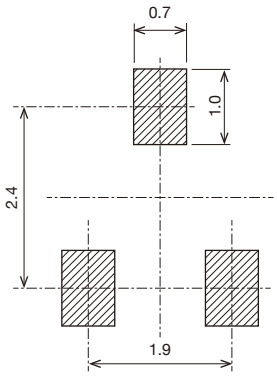
SOT-25A Scale: 10/1	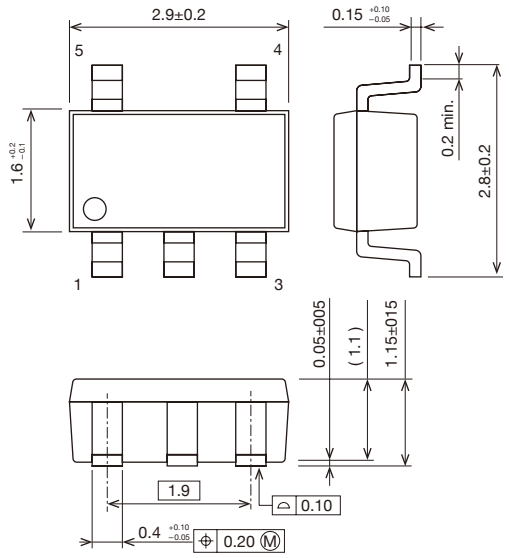	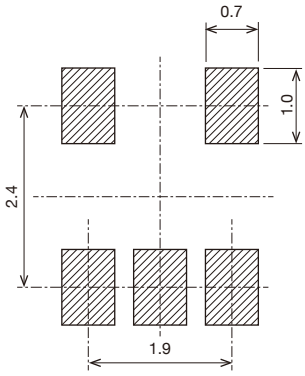

Downloaded from Arrow.com.

Unit: mm

Package Name	Dimentional Drawing	Recommended Land Pattern
SOT-26A Scale: 10/1	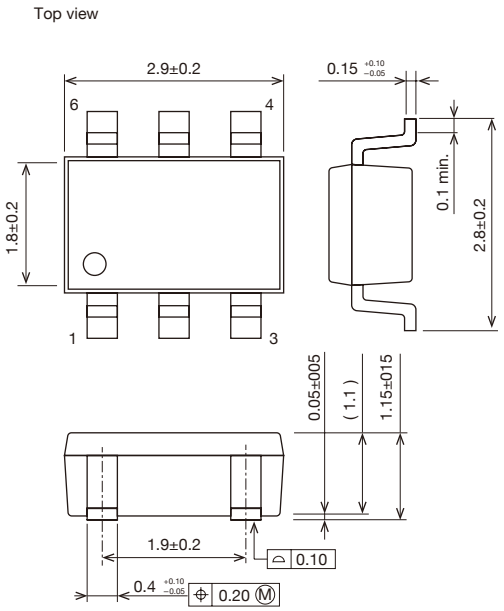	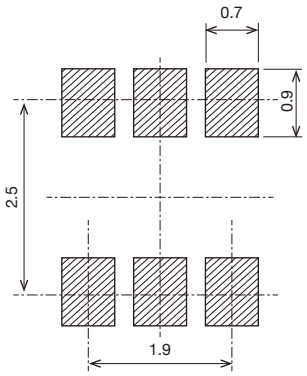
SOT-26B Scale: 5/1	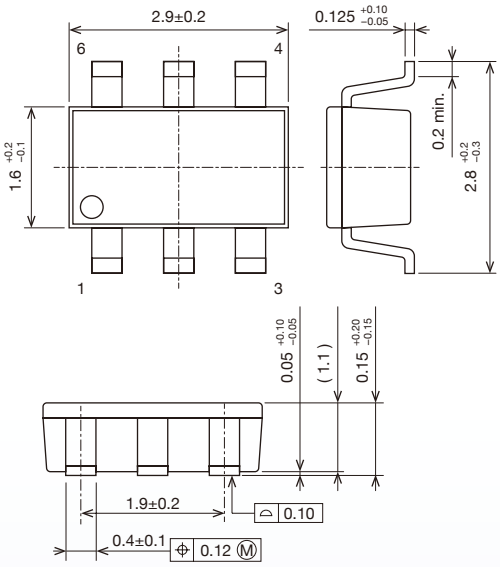	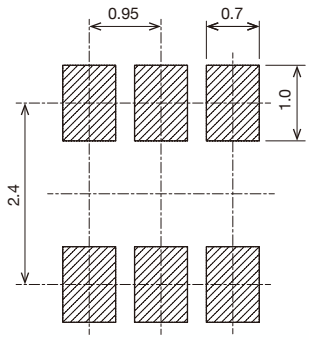

Downloaded from Arrow.com.

Unit: mm

Package Name	Dimentional Drawing	Recommended Land Pattern
SOT89-5A Scale: 5/1	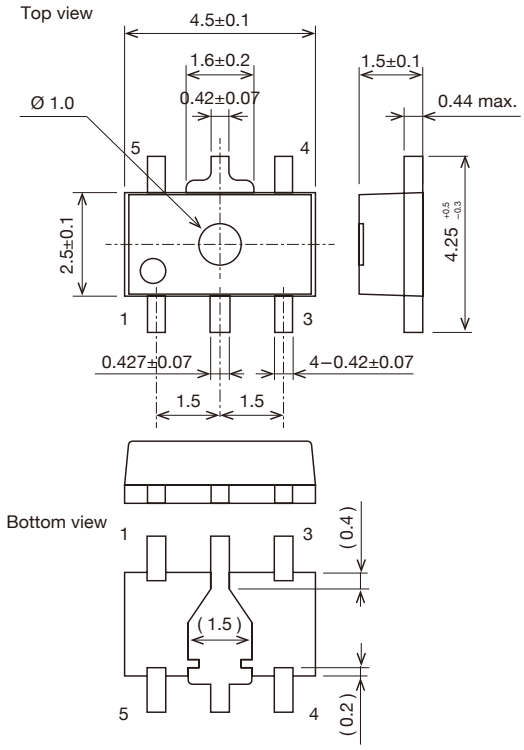	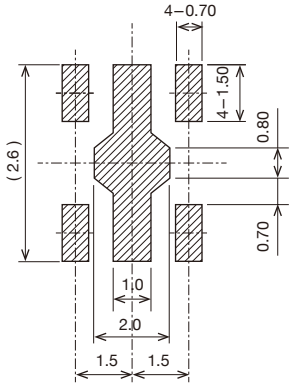
SQFN-16A Scale: 5/1	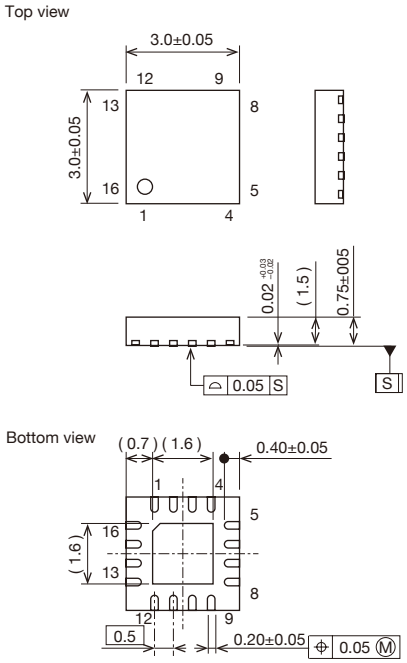	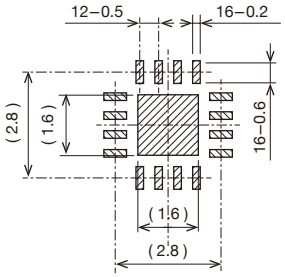

Downloaded from Arrow.com.

Unit: mm

Package Name	Dimentional Drawing	Recommended Land Pattern
SQFN-24A Scale: 5/1	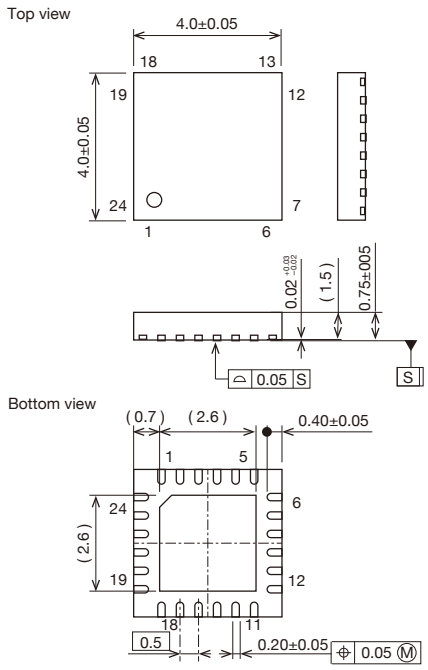	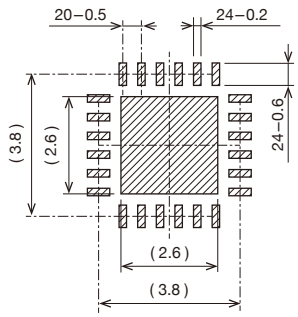
SQFN-32A Scale: 5/1	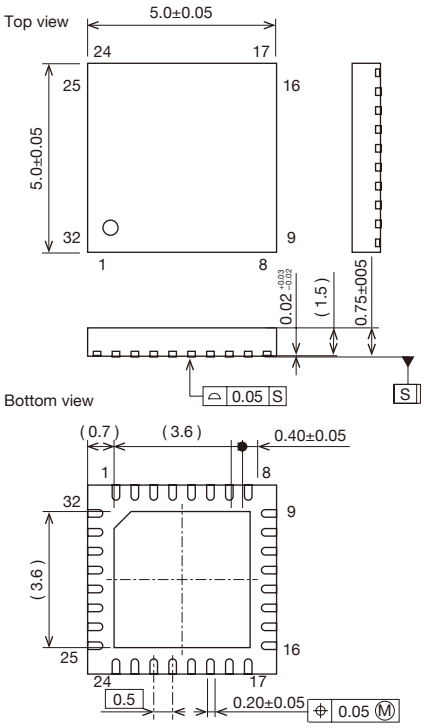	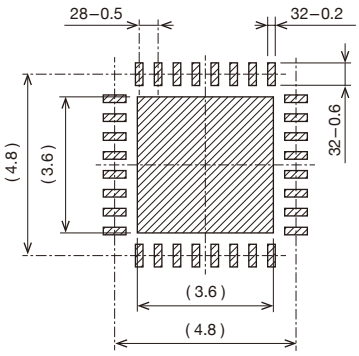

Downloaded from Arrow.com.

Unit: mm

Package Name	Dimentional Drawing	Recommended Land Pattern
SSON-4B Scale: 10/1	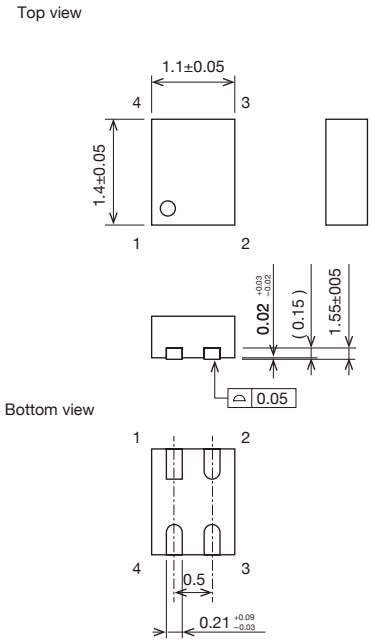	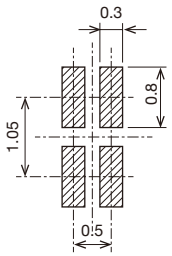
SSON-6A Scale: 10/1	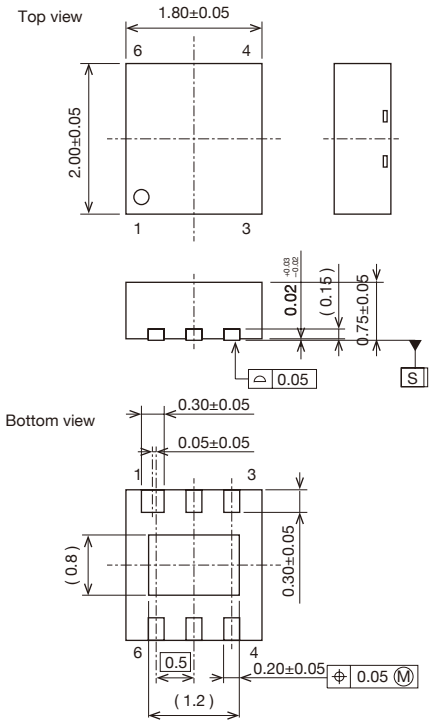	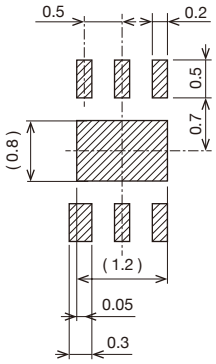

Downloaded from Arrow.com.

Unit: mm

Package Name	Dimentional Drawing	Recommended Land Pattern
SSON-6E Scale: 10/1	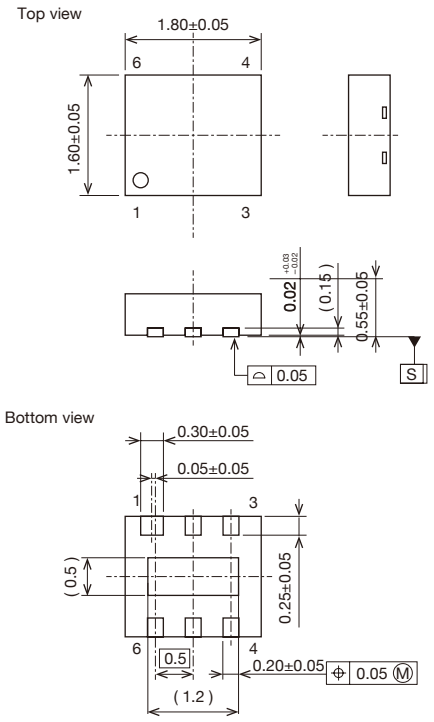	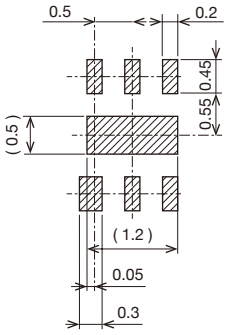
SSON-6J Scale: 10/1	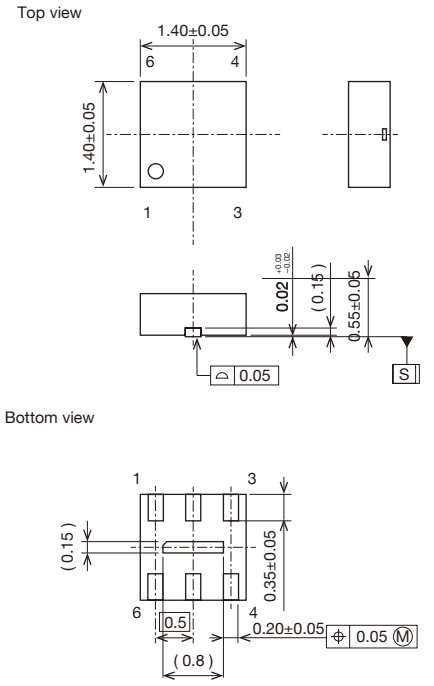	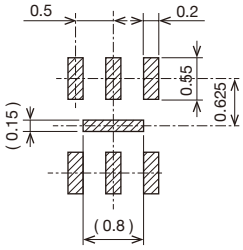

Downloaded from Arrow.com.

Unit: mm

Package Name	Dimentional Drawing	Recommended Land Pattern
SSON-6L Scale: 10/1	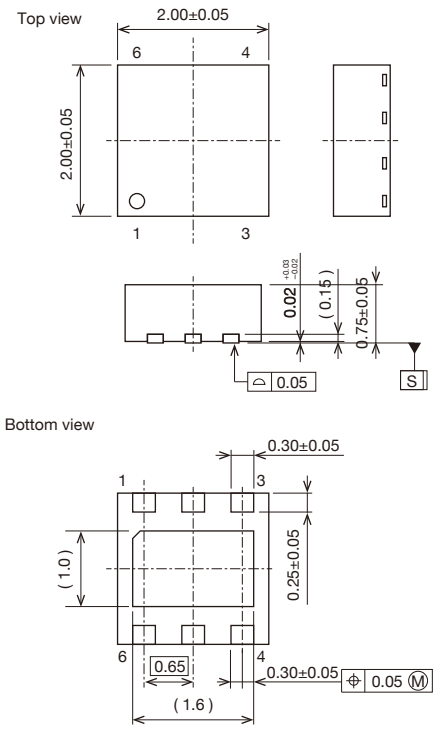	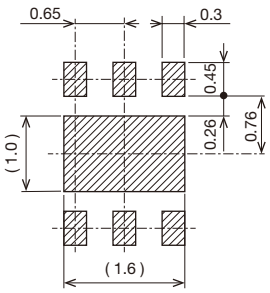
SSON-8B Scale: 5/1	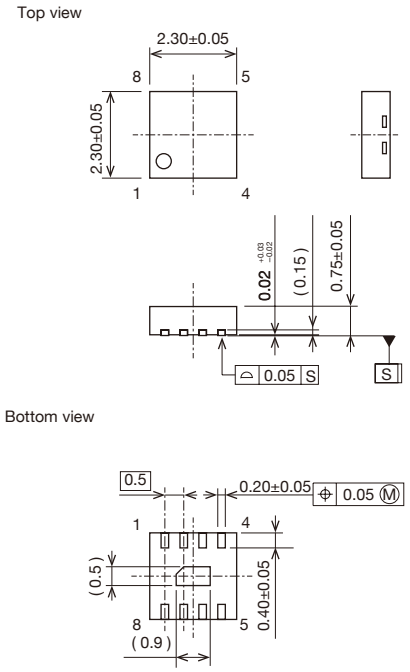	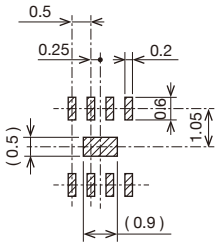

Downloaded from Arrow.com.

Unit: mm

Package Name	Dimentional Drawing	Recommended Land Pattern
SSON-8C Scale: 5/1	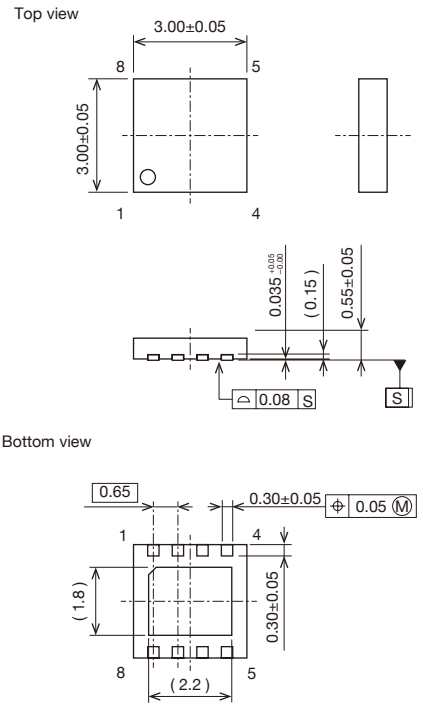	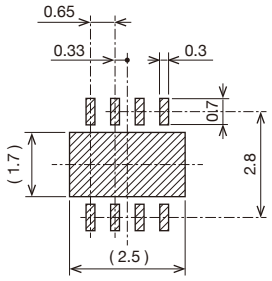
SSON-10A Scale: 5/1	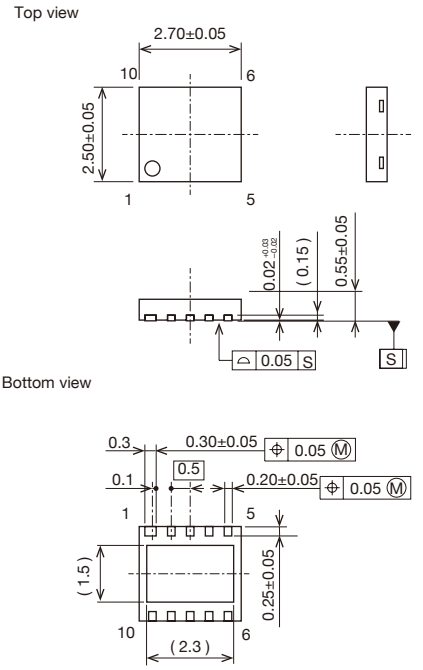	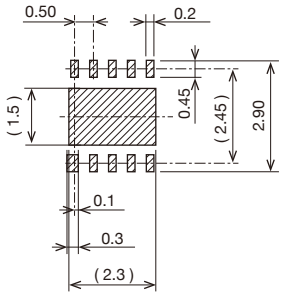

Downloaded from Arrow.com.

Unit: mm

Package Name	Dimentional Drawing	Recommended Land Pattern
SSOP-8A Scale: 10/1	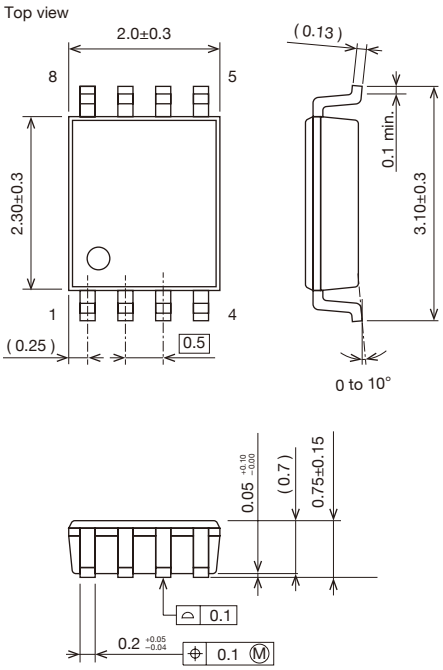	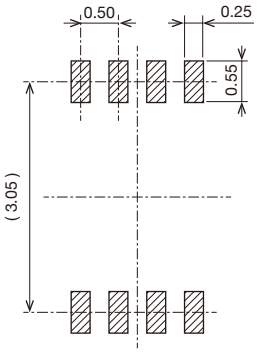
SSOP-24B Scale: 2/1	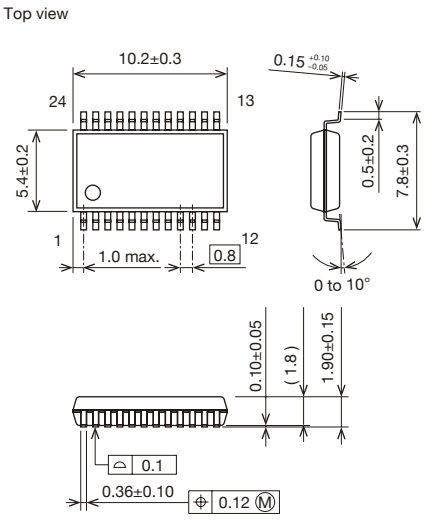	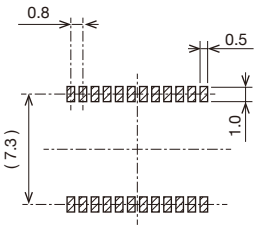

Downloaded from Arrow.com.

Unit: mm

Package Name	Dimentional Drawing	Recommended Land Pattern
SSOP-34A Scale: 2/1	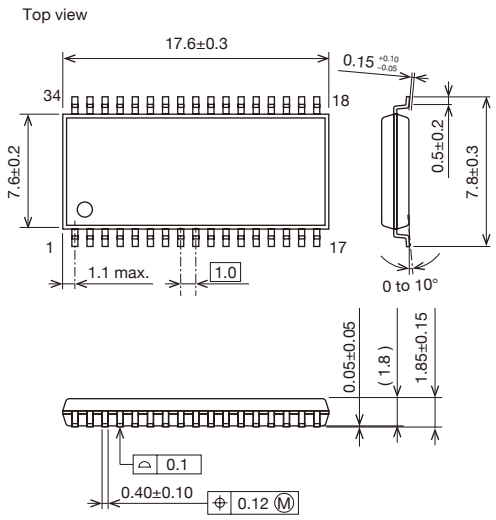	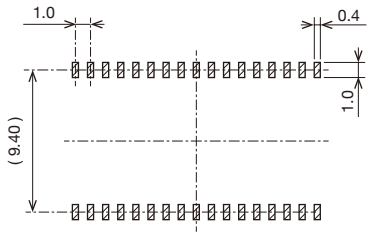
SSOP-36A Scale: 2/1	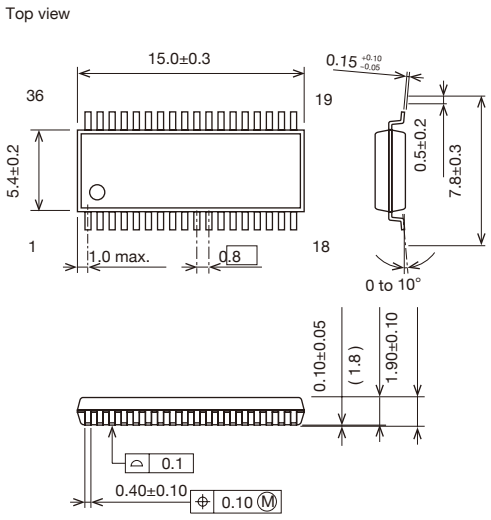	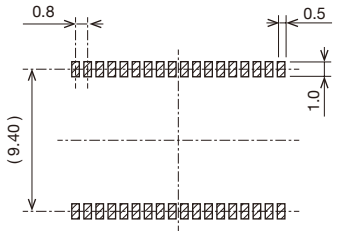

Downloaded from Arrow.com.

Unit: mm

Package Name	Dimentional Drawing	Recommended Land Pattern
SSOP-42A Scale: 2/1	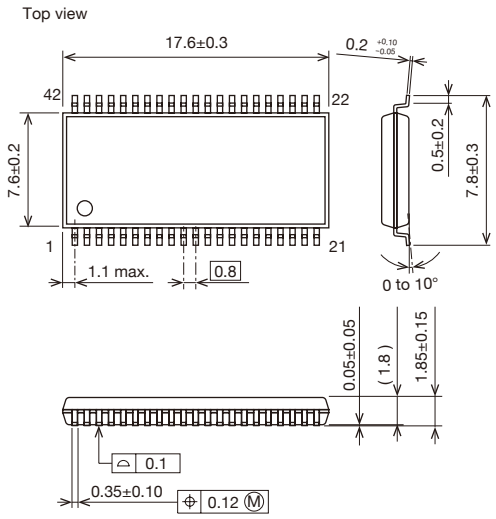	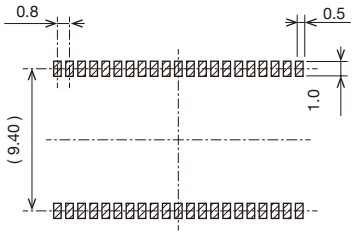
TO-92A Scale: 2.5/1	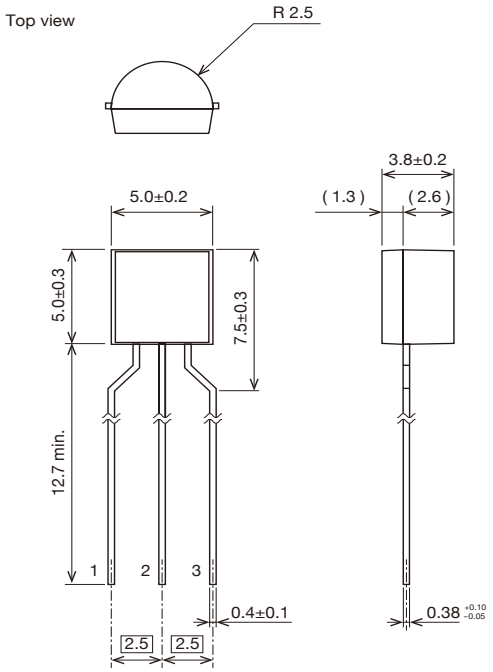	

Downloaded from Arrow.com.

Unit: mm

Package Name	Dimentional Drawing	Recommended Land Pattern
TO-252C Scale: 2/1	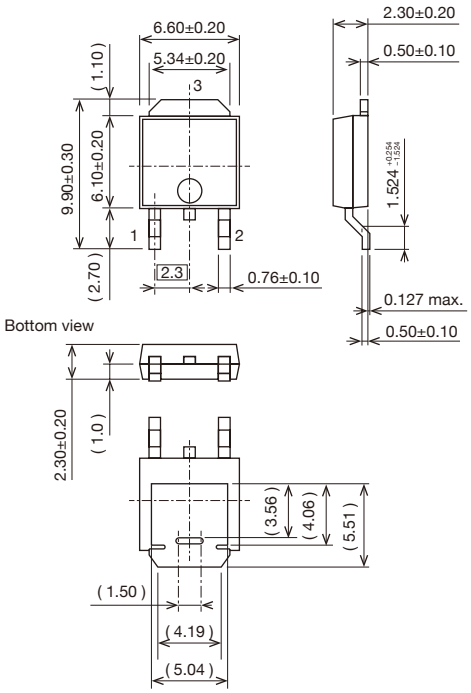	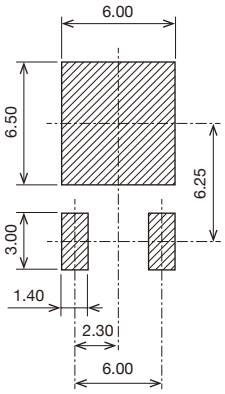
TO-252-5A Scale: 2/1	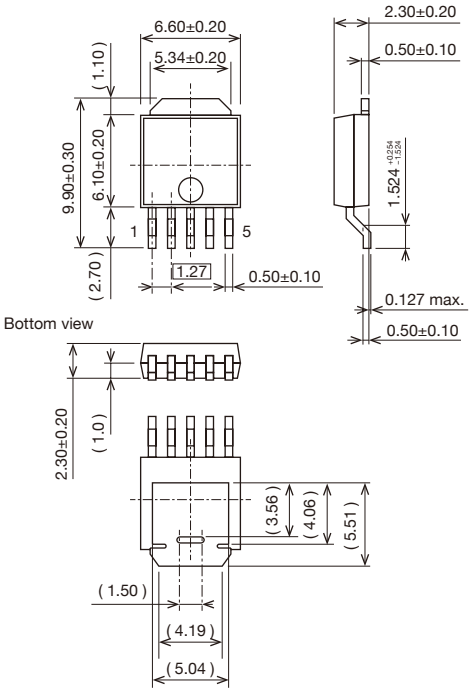	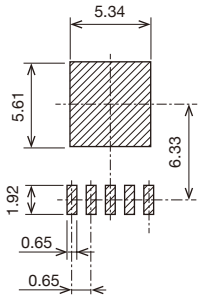

Downloaded from Arrow.com.

Unit: mm

Package Name	Dimentional Drawing	Recommended Land Pattern
TSOP-8A Scale: 10/1	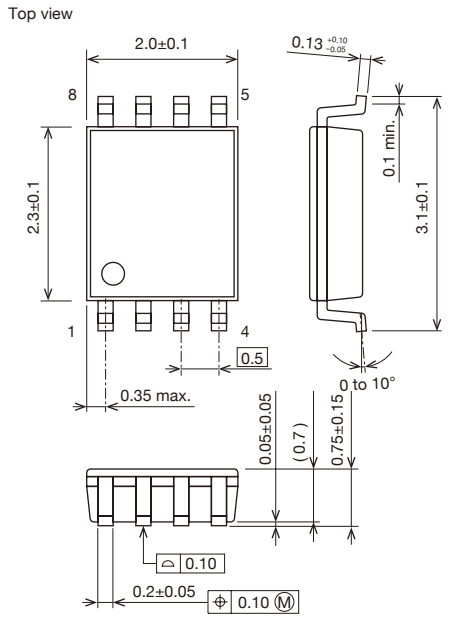	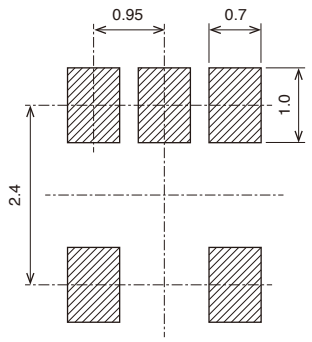
TSOP-16A Scale: 5/1	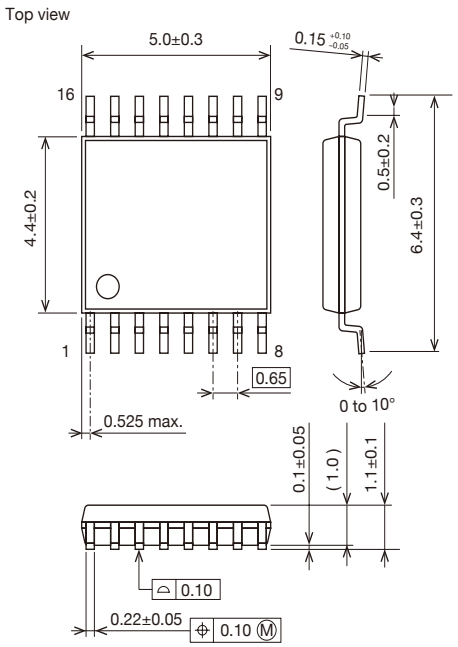	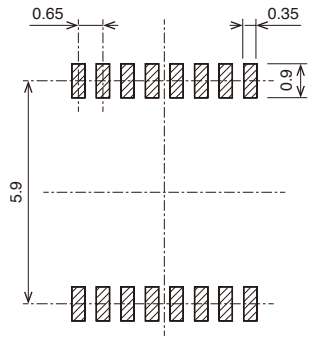

Downloaded from Arrow.com.

Unit: mm

Package Name	Dimentional Drawing	Recommended Land Pattern
TSOP-16B Scale: 5/1	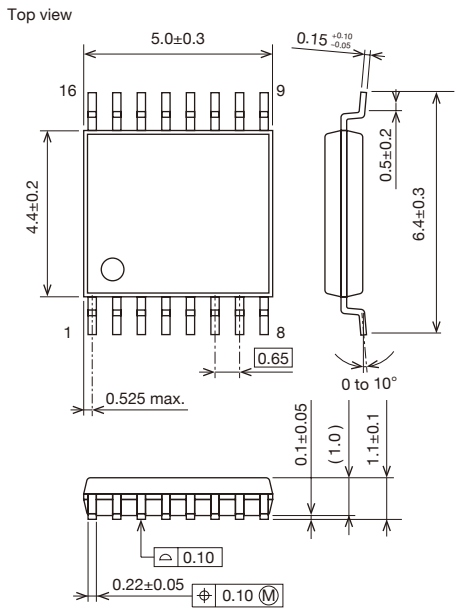	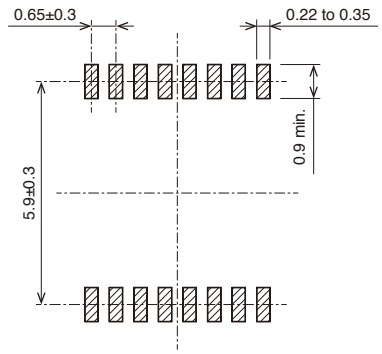
TSOP-16D Scale: 5/1	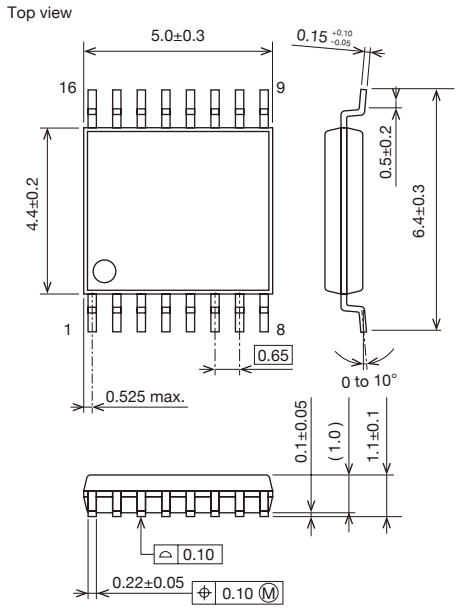	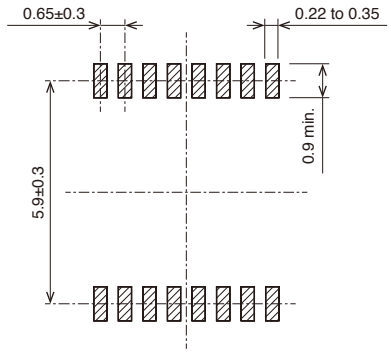

Downloaded from Arrow.com.

Unit: mm

Package Name	Dimentional Drawing	Recommended Land Pattern
TSOP-16D Scale: 5/1	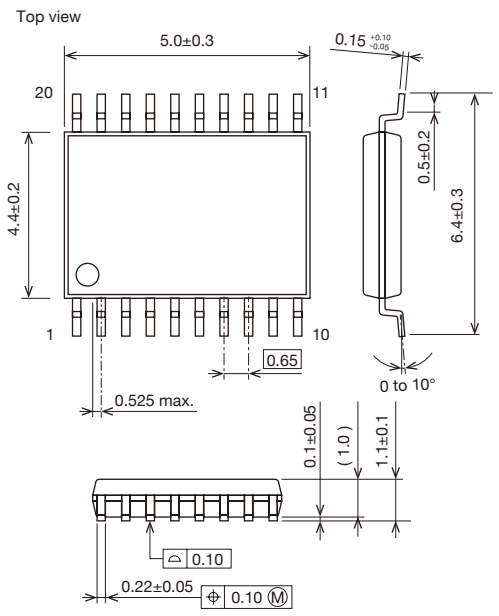	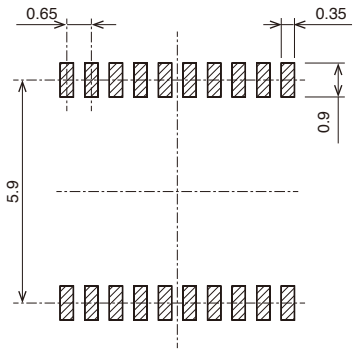
TSOP-20B Scale: 2.5/1	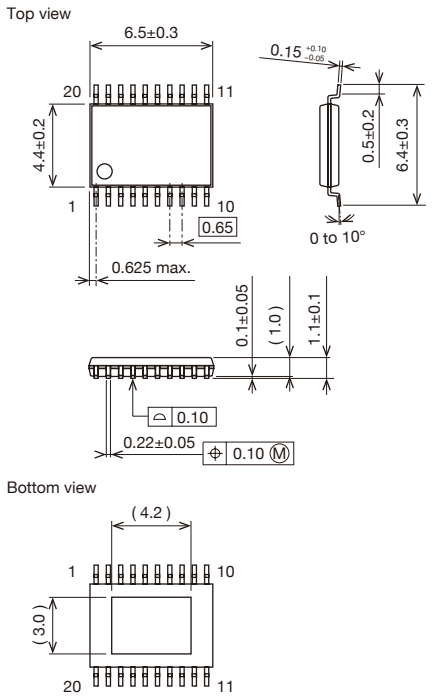	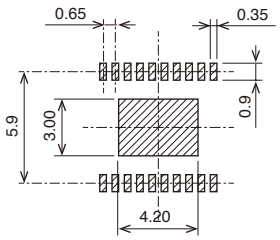

Downloaded from Arrow.com.

Unit: mm

Package Name	Dimentional Drawing	Recommended Land Pattern
TSOP-20D Scale: 2.5/1	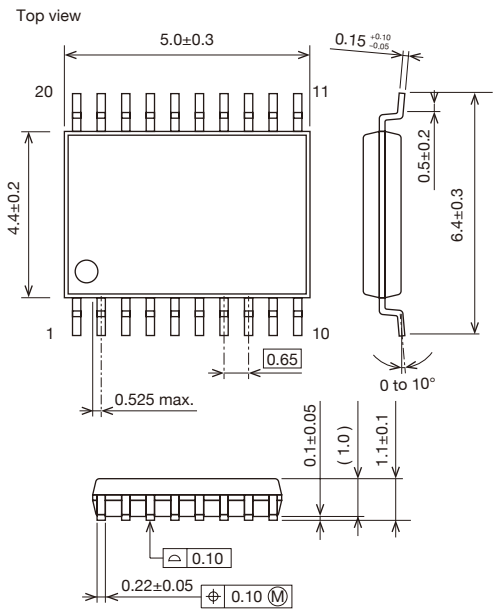	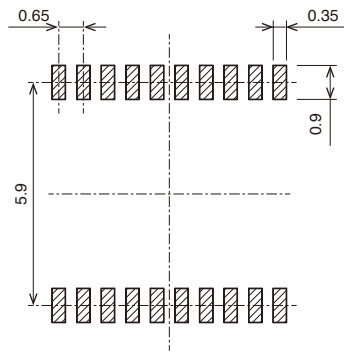
TSOP-20E Scale: 2.5/1	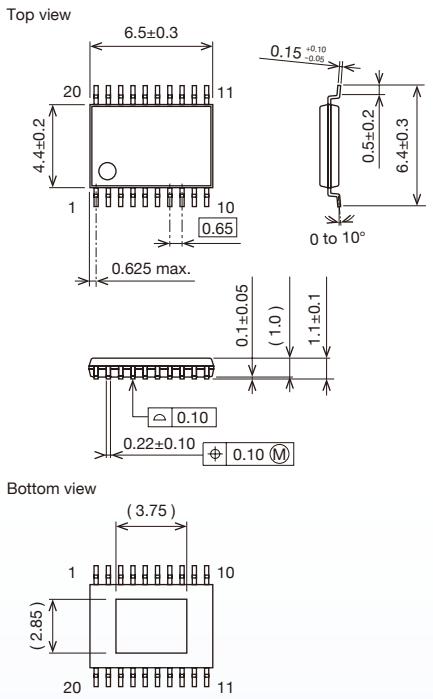	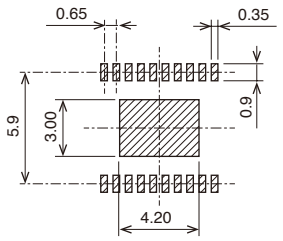

Downloaded from Arrow.com.

Unit: mm

Package Name	Dimentional Drawing	Recommended Land Pattern
TSOP-20F Scale: 2.5/1	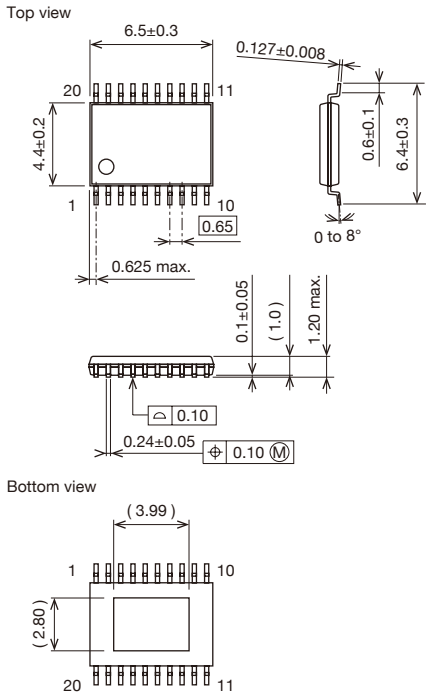	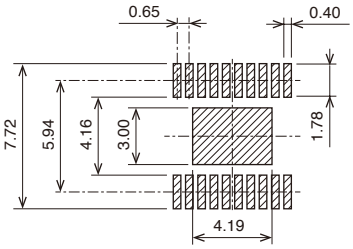
VSOP-8B Scale: 5/1	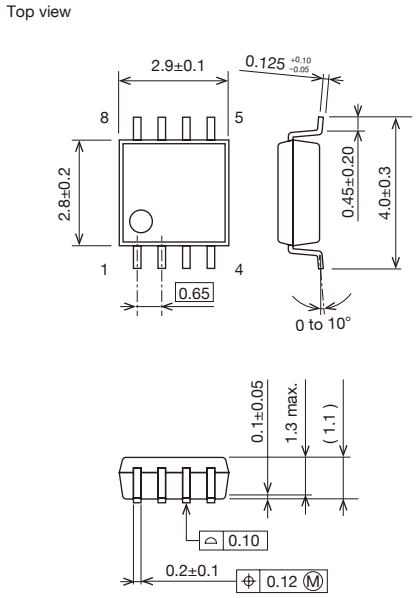	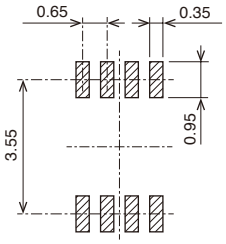

Downloaded from Arrow.com.

Unit: mm

Package Name	Dimentional Drawing	Recommended Land Pattern
VSOP-8C Scale: 5/1	Top view 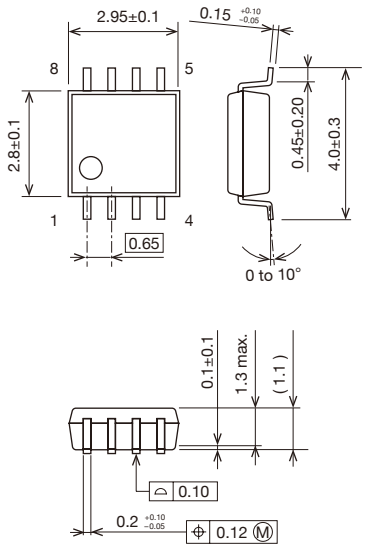	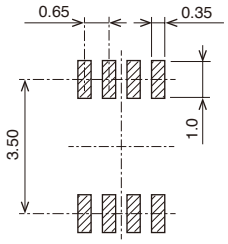
VSOP-8D Scale: 5/1	Top view 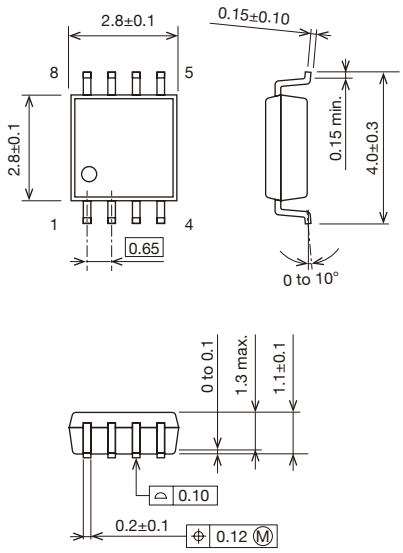	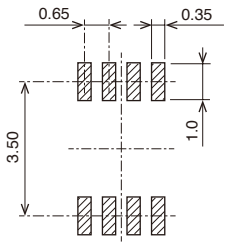

Downloaded from Arrow.com.

Unit: mm

Package Name	Dimentional Drawing	Recommended Land Pattern
VSOP-24A Scale: 2.5/1	Top view 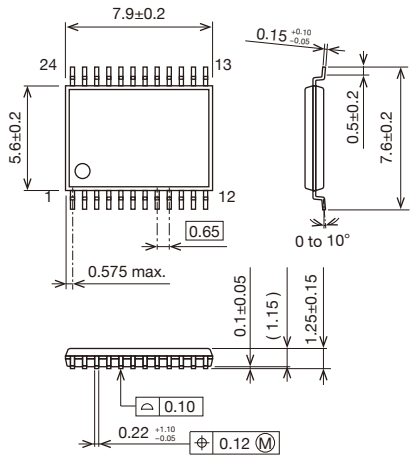 	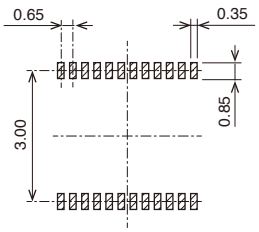
WLCSP-6C Scale: 10/1	Top view 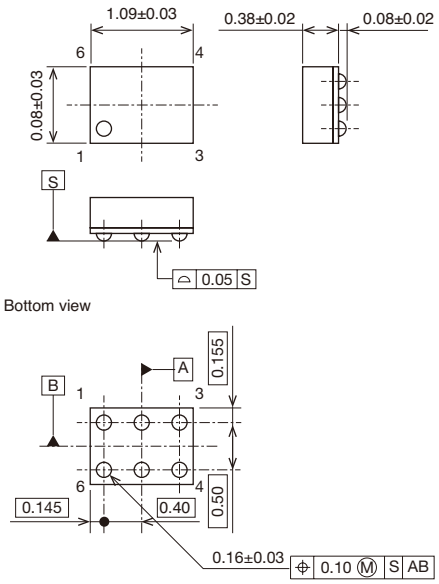 	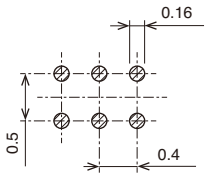

Downloaded from Arrow.com.

Unit: mm

Package Name	Dimentional Drawing	Recommended Land Pattern
WLCSP-9A Scale: 10/1	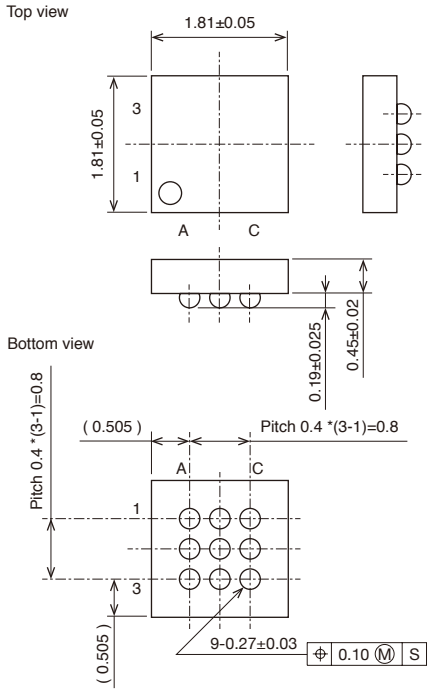	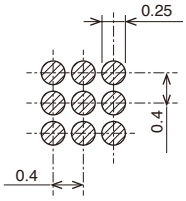
WLCSP-20A Scale: 10/1	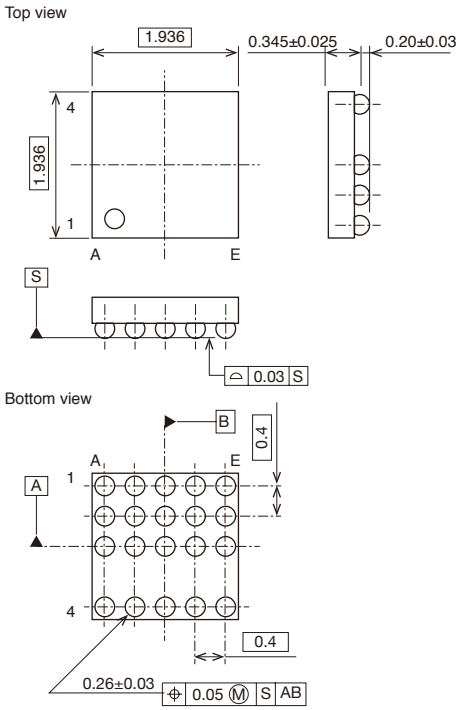	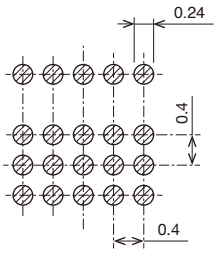

Downloaded from Arrow.com.

Unit: mm

Package Name	Dimentional Drawing	Recommended Land Pattern
WLCSP-25A Scale: 10/1	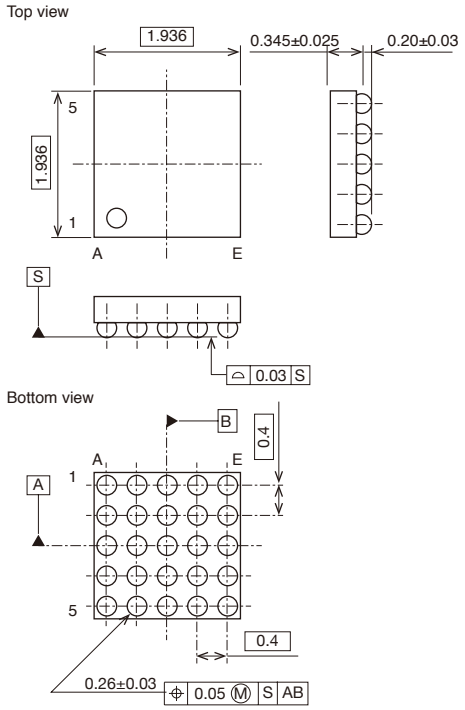	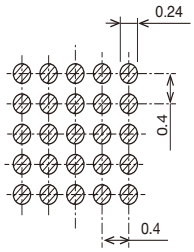
WLCSP-48B Scale: 5/1	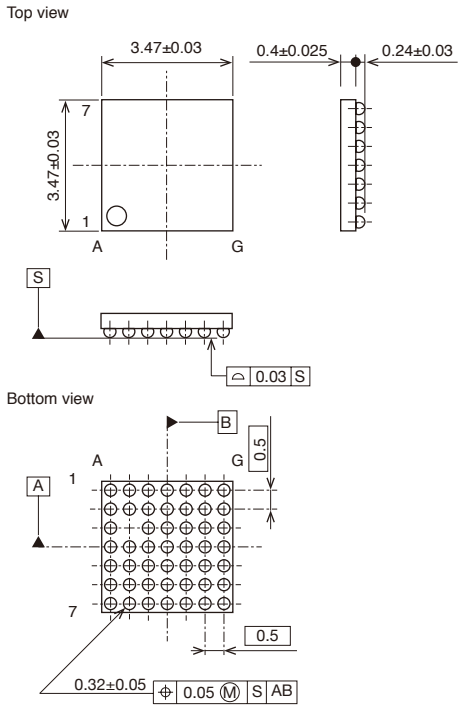	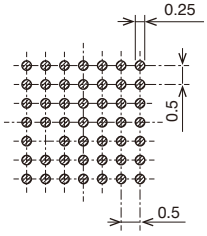

Downloaded from Arrow.com.

Downloaded from Arrow.com.

5 Pb-Free Recommended Profile

Reflow Soldering (max 2 times)

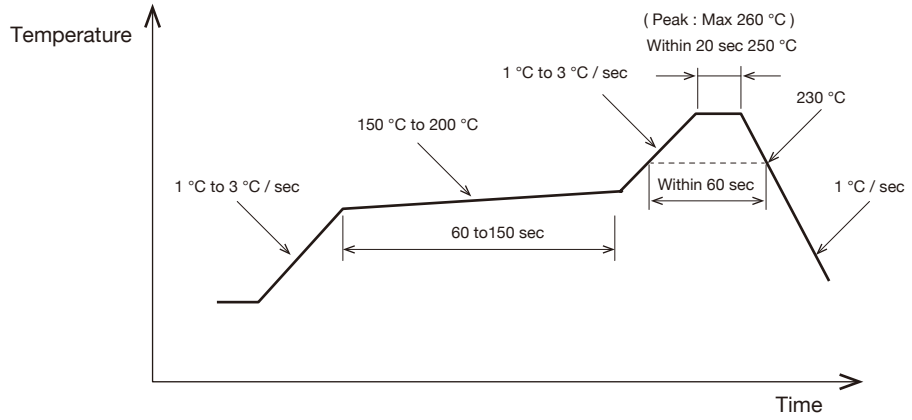

Flow Soldering (max 1 times)

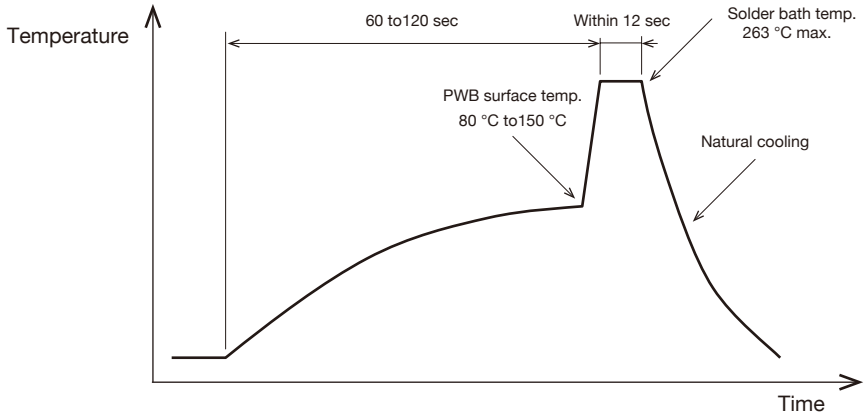

Note : In case of double-wave soldering, the temp. is at its peak during the total time of 2max. temp.

Manual Soldering

Iron tip temp./time	times
400 °C max. / 3 sec	2 max.

Pre Treatment Moisture Soaking Condition of Reliability Test

85 °C 65 %RH 168h (1st), 85 °C 65 %RH 168h (2nd)

note : Please contact us for the CSP package separately.

Downloaded from Arrow.com.

5 permissible counts of solder methods for each packages

Package	Reflow Soldering	Flow Soldering	Manual Soldering
TO-92A		1	2
SON-6A	2		2
SON-6B	2		2
SON-6C	2		2
SON-6D	2		2
SOT89-5A	2		2
SC-82ABA	2	1	2
SC-82ABB	2	1	2
SC-88A	2	1	2
SOT-23A	2	1	2
SOT-25A	2	1	2
SOT-26A	2	1	2
SOT-26B	2	1	2
SOP-7B	2	1	2
SOP-8C	2	1	2
SOP-8D	2	1	2
SOP-8J	2	1	2
SOP-10A	2	1	2
SOP-16B	2	1	2
SOP-28B	2	1	2
SSOP-8A	2	1	2
SSOP-24B	2	1	2
SSOP-34A	2		2
SSOP-36A	2	1	2
SSOP-42A	2	1	2
TSOP-8A	2		2
TSOP-16A	2		2
TSOP-16B	2		2
TSOP-16D	2		2
TSOP-20A	2		2
TSOP-20B	2		2
TSOP-20D	2		2
TSOP-20E	2		2
VSOP-8B	2		2
VSOP-8C	2		2
VSOP-8D	2		2
VSOP-24A	2		2
HSOP-8A	2		2
HSOP-8C	2		2
HSOP-28A	2	1	2
HSOP-28C	2	1	2
HSOP-36A	2	1	2
QFP-64E	2*2		2
QFP-80D	2*1		2
QFP-100A	2*1		2
TO-252C	2		2
TO-252-5A	2		2
PLP-4A	2		
PLP-4B	2		
PLP-41228	2		
PLP-4-2140	2		
PLP-6A	2		
PLP-6C	2		
PLP-6F	2		
PLP-6-2130	2		
PLP-8E	2		
PLP-8F	2		
PLP-10A	2		

Downloaded from Arrow.com.

Package	Reflow Soldering	Flow Soldering	Manual Soldering
PLP-10D	2		
PLP-12A	2		
PLP-12B	2		
SQFN-16A	2		
SQFN-24A	2		
SQFN-32A	2		
SSON-4B	2		
SSON-6A	2		
SSON-6E	2		
SSON-6J	2		
SSON-6L	2		
SSON-8B	2		
SSON-8C	2		
SSON-10A	2		
WLCSP-6C	2		
WLCSP-9A	2		
WLCSP-20A	2		
WLCSP-25A	2		
WLCSP-48B	2		

*1 Ask us the temperature.
*2 This packages should be soldered within 168 hours after unpacking because they are moisture-proof packing products.
They should be also soldered within 168 hours in the second or following solder.

Downloaded from Arrow.com.

MITSUMI Electric provides various electronic parts by using its developing capacity and technological capacity as a comprehensive parts manufacturer.
The company can prepare its original electronic parts of "proposal type" and can support the development of electronics products with a high market competitive power.

ICs
- Power Supply IC
- Li-Battery IC
- Reset IC
- Sensor IC

Component Devices
- Power Inductor / Transformer / Coil
- Connector
- Switch
- DC Mini-Motor
- Stepping Motor

Power Supply
- AC Adaptor
- Charger
- DC Adaptor
- Internal Power Supply
- Power Supply for LED Light

High-frequency Products
- Wireless LAN Module
- Bluetooth® Module
- GPS Antenna
- Terrestrial Digital Broadcasting Antenna
- Keyless Module

CATV / IP / Optical Communication
- Set-top Box

Our lead-free products meet the requirements of the RoHS directive.

JET REGISTERED FIRM
ISO14001
E97-024

Downloaded from Arrow.com.

●Note: The contents described in this catalog ar e subject to c hange without prior notice due to products impro vements or ter mination of production.

Please refer to MITSUMI's home page for the most recent product data.

English

http://www.mitsumi.co.jp/products/eng/

- The product information on the home page is the same as that in the catalog.
- The data are updated continuously, so the home page always shows the newest product information.
- A search function is provided to help you quickly find the product you are looking for or related products. Please make full use of it.
- Product data is recorded in Adobe's Acrobat PDF file format.

Please address inquiry to :

Head Office (Tokyo)

○Semiconductor Sales Division ..... 2-11-2, Tsurumaki, Tama-shi, Tokyo, 206-8567 JAPAN ..... TEL: +81-42-310-5342

Atsugi Operation Base

○Semiconductor Devices HQ

Strategy Engineering Dept..... 1601, Sakai, Atsugi-shi, Kanagawa-ken, 243-8533 JAPAN Atsugi Opera tion Base ..... TEL: +81-46-230-3470

Japanese Sales Offices

Head Office (Tokyo) ..... 2-11-2, Tsurumaki, Tama-shi, Tokyo, 206-8567 JAPAN..... TEL: +81-42-310-5333

○Kansai Branch..... 2-8-15, Kita Umeda Bldg., Shibata, Kita-ku, Osaka-shi, Osaka-fu, 530-0012 JAPAN..... TEL: +81-6-6372-0571

○Kariya Office..... Room 305 Second Central Bldg., 4-3, Sakuramachi, Kariya-shi, Aichi-ken, 448-0028 JAPAN ..... TEL: +81-566-28-3881

○Kyoto Office..... Tatsumi Bldg. 4D, 607, Higashishiokojicho, Shimogyo-ku, Kyoto-shi, Kyoto-fu, 600-8216 JAPAN..... TEL: +81-75-353-7346

○Sumoto Office..... 102 Urban Haimu Sumoto, 3-3-4, Sakaemachi, Sumoto-shi, Hyogo-ken, 656-0026 JAPAN..... TEL: +81-799-25-3566

○Hiroshima Office ..... Sumitomoseimei Hiroshima Bldg.,11F 4-1, Inaricho, Minami-ku, Hiroshima-shi, Hiroshima-ken, 732-0827 JAPAN..... TEL: +81-82-535-8801

○Kyushu Office ..... 1049 Tateiwa, Iizuka-shi, Fukuoka-ken, 820-8533 JAPAN Kyushu Business Division ..... TEL: +81-948-22-9320

World Sales Branches / Offices

■Taiwan

MITSUMI ELECTRIC CO., LTD.

○Taiwan Branch ..... 7F, No.16 Lane 135, Sec 2, Minchuan East Road, Taipei 104, Taiwan, (R.O.C.) ..... TEL: +886-2-2502-1117

■China

MITSUMI (SHANGHAI) ELECTRIC CO ., LTD..... Room 1103, Orient International Plaza (Part-C) No.85 Lou Shan Guan Road Shanghai, China Post Code 200336 .... TEL: +86-21-6278-7643

○Shenzhen Branch Office ..... 5A, Jinrun mansion, No.6019 Shennan Road, Futian District, Shenzhen, Guangdong, China Post Code518040 ..... TEL: +86-755-8831-6433

MITSUMI CO., LTD.(Hong Kong) ..... 1st Floor, Unit "K", Kaiser Estate, Phase 2, 51 Man Yue Street, Hunghom, Kowloon, Hong Kong..... TEL: +852-2333-0163

TIANJIN MITSUMI ELECTRIC CO ., LTD.

○Beijing Office..... Room B1218, 12/F Hanwei Plaza, No.7 Guanghua Rd, chaoyang District Beijing, People's Republic of China ... TEL: +86-10-6568-7360

■Korea

KOREA MITSUMI CO., LTD. ..... Korea Auto Center 3-Floor, 25, Banpo-Daero, Seocho-Gu, Seoul, 137-720 Korea..... TEL: +82-2-3471-9734~7

■Singapore

MITSUMI ELECTRONICS (SINGAPORE) PTE. LTD.... No.12 Ang Mo Kio Industrial Park 2 Singa pore 569502, Republic of Singa pore ..... TEL: +65-6481-7561~5

■Malaysia

MITSUMI TECHNOLOGY (M.) SDN . BHD.

○Penang Office..... Unit 10.06 10th Floor Menara Boustead Penang 39 Jalan Sultan Ahmad Shah 10050 Penang Malaysia ... TEL: +60-4-2297921

■Thailand

MITSUMI (THAILAND) CO., LTD.

○Bangkok Office ..... No.555 Rasa Tower 1, 11th Floor, Phaholyothin Road, Chatuchak Bangkok, 10900, Thailand ..... TEL: +66-2-937-0433~5

■U.S.A.

MITSUMI ELECTRONICS CORPORATION

○Detroit Head Office..... 40000 Grand River Avenue, NOVI Technology Center Suite 200 Novi, Michigan 48375, U.S.A..... TEL: +1-248-426-8448

○Cupertino Office..... 19200 Stevens Creek Blvd., Suite 140, Cupertino, California 95014, U.S.A..... TEL: +1-408-366-6100

○Seattle Office ..... 3805 108th Ave. NE, Suite 106 Bellevue, WA 98004 U.S.A..... TEL: +1-408-660-5255

■Germany

Mitsumi Electronics Europe GmbH

○Headquarters (Germany) ..... Frankfurter Strasse 80-82 D-65760 Eschborn, F.R. Germany ..... TEL: +49-(0)6196-99880-0

■French

Mitsumi Electronics Europe GmbH

○French Branch ..... 8 rue du General Leclerc 27950 Saint Marcel, France..... TEL: +33-232-774958

MITSUMI ELECTRIC CO.,LTD.
Corporate Headquarters : 2-11-2 Tsurumaki, Tama-shi, Tokyo 206-8567, JAPAN
TEL : +81-42-310-5333 FAX : +81-42-310-5168

Printed in Japan 1609A57①

Downloaded from Arrow.com.