used for: D-SUB

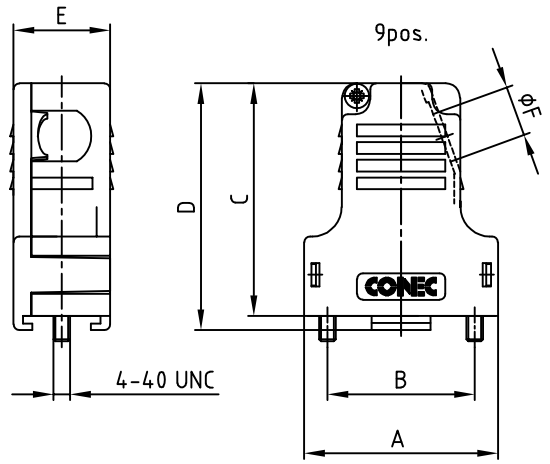

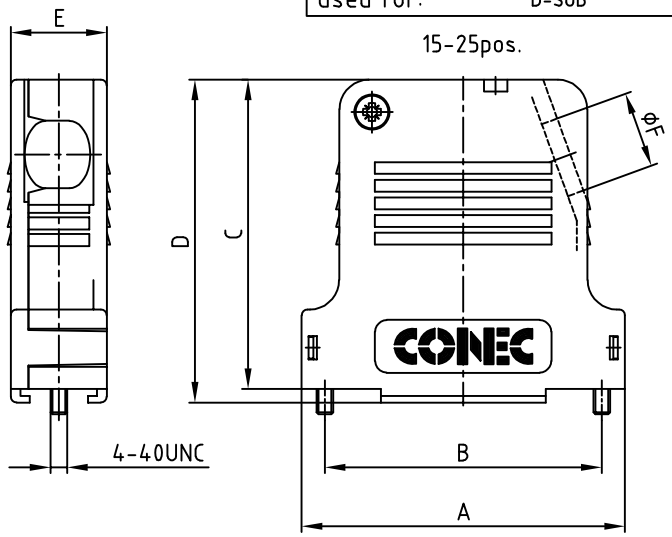

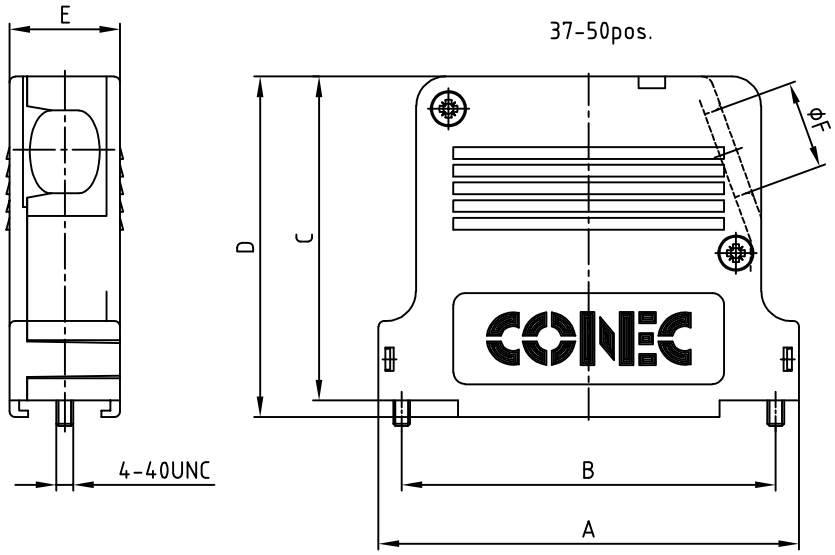

ⓓ

No. of pos.	$A^{+0.3}_{-0.1}$	B ±0.2	$C^{+0.3}_{-0.2}$	$D^{+0.3}_{-0.5}$	E ±0.2	ØF cable diameter		Part-NO. Single package	Part-NO. Bulk package	
						WITH PRESS INSERT ✳	WITHOUT PRESS INSERT ✳			
9	32.9	25.0	39.5	41.9	16.4	4.0 - 6.3	6.4 - 8.6	165X13519XE	165X13519X	
15	41.2	33.3	45.5	47.9	16.4	4.0 - 6.3	6.4 - 8.6	165X13529XE	165X13529X	600X10015XM
25	54.9	47.0	52.5	54.9	16.4	6.5 - 8.5	8.6 - 12.0	165X13539XE	165X13539X	
37	71.4	63.5	55.0	57.9	18.8	8.5 - 10.9	11.0 - 14.0	165X13549XE	165X13549X	
50	69.0	61.1	55.0	57.9	19.6	8.5 - 10.9	11.0 - 14.0	165X13559XE	165X13559X	

ⓔ ✳ = WHICH INSERT IS USED IS ALSO DEPENDENT ON THE CABLE ITSELF

HOOD ASSEMBLY CONSISTS OF:
- 1 x HOOD + COVER: ABS UL 94 V-0; METALLIZED
- 1 x PRESS INSERT: ABS UL 94 V-0; METALLIZED
- 2 x JACKSCREWS: BRASS; NICKEL PLATED
- 2 x SCREW FOR STRAIN RELIEF: STEEL; NICKEL PLATED
- 1 x COVER SCREW (9-25pos.): STEEL; NICKEL PLATED
  2 x COVER SCREW (37-50pos.): STEEL; NICKEL PLATED
- 1 x STRAIN RELIEF: STEEL; NICKEL PLATED

TECHNICAL DATA:
- TEMPERATURE RANGE: -33°C to +90°C
- ⓔ - RECOMMENDED MOUNTING TORQUE FOR STRAIN RELIEF SCREW + COVER SCREW: 0.15 Nm

RoHS compliant

APPROVAL # FREIGABE # DEBLOCAGE # AUTORIZACION # APPROVAL
CUSTOMER APPROVAL DATE:
NAME: TITLE:
COMPANY NAME:

THIS DRAWING MAY NOT BE COPIED OR REPRODUCED IN ANY WAY, AND MAY NOT BE PASSED ON TO A THIRD PARTY WITHOUT WRITTEN PERMISSION. OWNERSHIP AND COPYRIGHT OF CONEC GmbH
DO NOT ALTER CAD DRAWING BY HAND

rev.	description	date	name
2 x e	Ä19-0215	22.07.2019	JLE
1 x d	Ä6896	04.10.2017	Lehmen.
1 x c	Ä4960	17.10.2013	Lehmen.
5 x b	Ä2544	04.08.2006	Lehmen.
a	Original		

tolerance		
2001	date	name
drawn	19.09.	E. Mickenbecker
appd.	19.09.	A. Mickenbecker
norm		
d-old		

dim. in mm

scale: 1:1
material: SEE DRAWING
title: PLASTIC HOOD 9-50pos. with side cable exit
dwg no: 16K2A009A
AutoCAD DIN-A 3 sh: 1/1
part no: SEE TABLE

Downloaded from Arrow.com.