THIS DRAWING AND THE SUBJECT MATTER SHOWN THEREON ARE CONFIDENTIAL AND THE PROPERTY OF BEL/STEWART/TRP CONNECTOR AND SHALL NOT BE REPRODUCED, COPIED, OR USED IN ANY MANNER WITHOUT THE WRITTEN CONSENT OF TRP CONNECTOR.

PRODUCT MAY BE PROTECTED BY ONE OR MORE OF THE FOLLOWING US PATENTS:
5736910 5939955 6425781 6428361 6554638 6840817 7123117
7429195 7717749 7808751 6217391 6149050 7924130

REVISIONS

P	LTR	DESCRIPTION	DATE	DWN	APVD
	F	EC-1411035 COMPANY LOGO CHANGE	08JAN2015	TL	KZ

MECHANICAL:

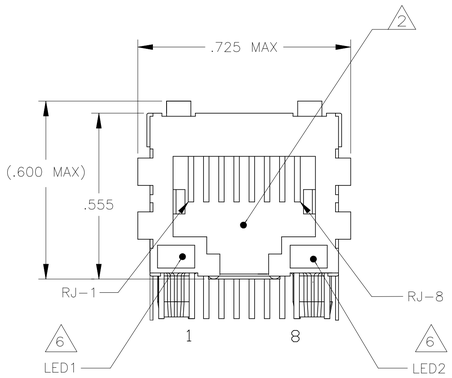

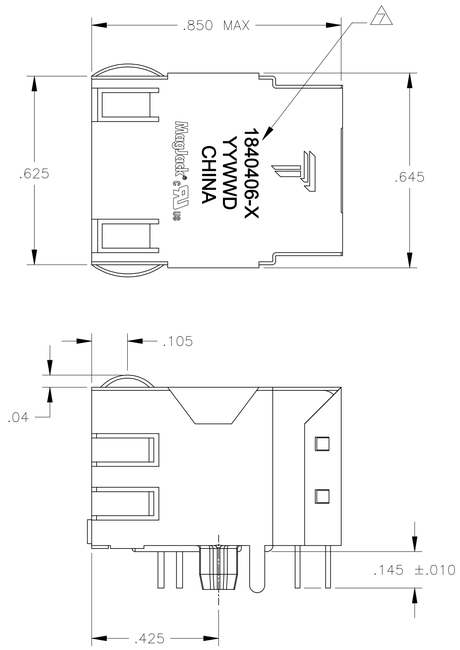

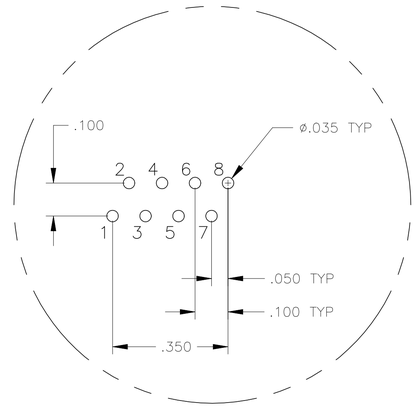

Pin Designations

1. MATERIALS:
-HOUSING - THERMOPLASTIC PET POLYESTER FLAMMABILITY RATING UL 94V-0.
-SHIELD - .010" THICK, C26800 BRASS PREPLATED WITH 30uinch SEMI-BRIGHT NICKEL; SOLDER TABS POST-DIPPED WITH 100uinch MIN SAC SOLDER
-MOD JACK CONTACTS - .0157" x .018" THICK, PHOSPHOR BRONZE, 50µinch MIN OVERALL NICKEL UNDERPLATE, WITH SELECT 50µinch MIN HARD GOLD FINISH PLATE. SOLDERTAILS WITH 100µinch MATTE TIN AND/OR SAC SOLDER DIP.
-LIGHT EMITTING DIODE(LED) - DIFFUSED EPOXY LENS, .020" x .020" CARBON STEEL WIREFRAME LEADS PREPLATED WITH 80 µINCH SILVER OVER 40 µINCH NICKEL UNDERPLATE OVER 40µINCH COPPER UNDERPLATE;
POST-PLATED WITH 100 µINCH MIN MATTE TIN AND/OR SAC SOLDER DIP OR PURE TIN SOLDER DIP.

2. RJ45 JACK CAVITY CONFORMS TO FCC RULES AND REGULATIONS PART 68, SUB PART F.

3. MAGNETICS
-APPLICATION: 10/100 BASE-T
-IMPEDANCE: 100 OHMS
-TURNS RATIO (CHIP:CABLE): TX = 1:1, RX = 1:1
-OPEN CIRCUIT INDUCTANCE (OCL): 350µH MIN @100kHz, 0.1VRMS, 8mADC BIAS FROM 0°C TO 70°C, TX AND RX
-PERFORMANCE @ 25°C:
INSERTION LOSS (IL): 1.1dB MAX FROM 0.5MHz TO 100MHz
RETURN LOSS (RL): 18dB MIN FROM 0.5MHz TO 30MHz
18-20LOG(f/30)dB MIN FROM 30.1MHz TO 60MHz
12dB MIN FROM 60.1MHz TO 80MHz
CROSSTALK ATTENUATION: 35dB MIN FROM 0.5MHz TO 40MHz
33-20LOG(f/50)dB MIN FROM 40.1MHz TO 100MHz
COMMON MODE REJECTION RATIO (CMRR): 30dB MIN FROM 0.5MHz TO 100MHz
-ISOLATION VOLTAGE: COMPLIES WITH IEEE802.3 2002, PARA 23.5.1.1, ITEM b.

4. OPERATING TEMPERATURE: FROM 0°C TO +70°C.

5. THE MAGNETICS ARE SYMMETRICAL, AND SUPPORTS AUTO-MDI/MDIX.

6. LEDS WITHOUT BUILT-IN RESISTOR
LEDS ARE DRIVEN WITH CONSTANT CURRENT AT APPROX 20 mA
LED COLOR: DOMINANT WAVELENGTH (λD): GREEN 568 nm TYP @ IF=20 mA
FORWARD VOLTAGE (VF): GREEN 2.2V TYP @ IF=20 mA
DOMINANT WAVELENGTH (λD): YELLOW 588 nm TYP @ IF=20 mA
FORWARD VOLTAGE (VF): YELLOW 2.1V TYP @ IF-20 mA

7. TRP CONNECTOR LOGO, PART NUMBER, DATE CODE, COUNTRY OF ORIGIN AND AGENCY APPROVAL MARKING IN APPROXIMATE LOCATION SHOWN.

8. THE PART IS RECOMMENDED FOR WAVE SOLDERING PROCESS, PEAK SOLDERING TEMPERATURE IS 265 °C MAX, 10 SECONDS MAX.

ELECTRICAL:

326P13 MAGNETIC CIRCUIT 3 5

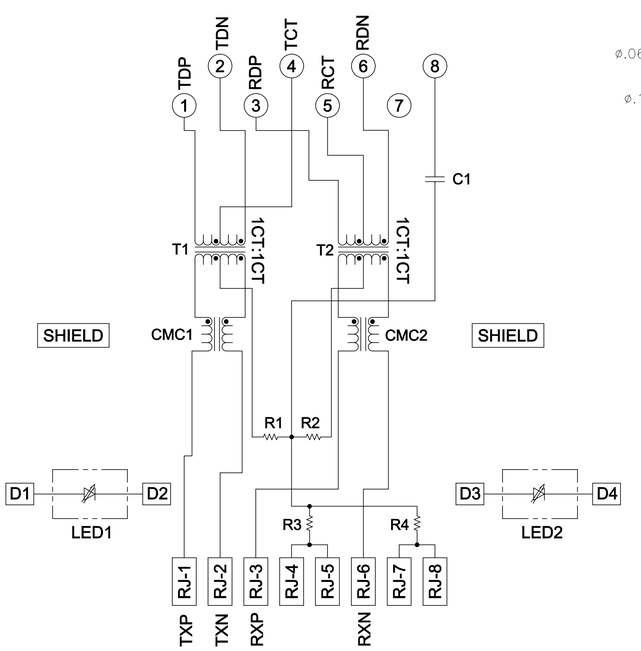

C1=1000pF, 2kV CAPACITOR
R1-R4=75 OHMS, 5%, 1/16W RESISTORS

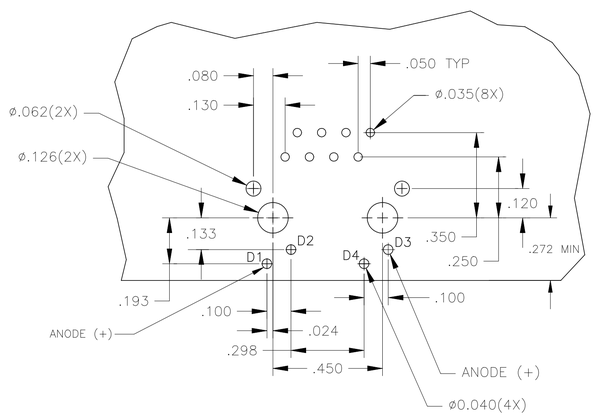

Suggested PCB Layout
(Component Side)

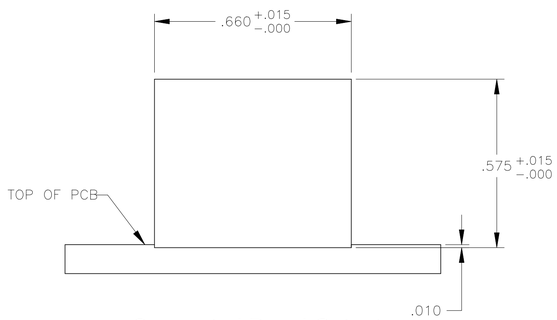

Suggested Panel Cutout

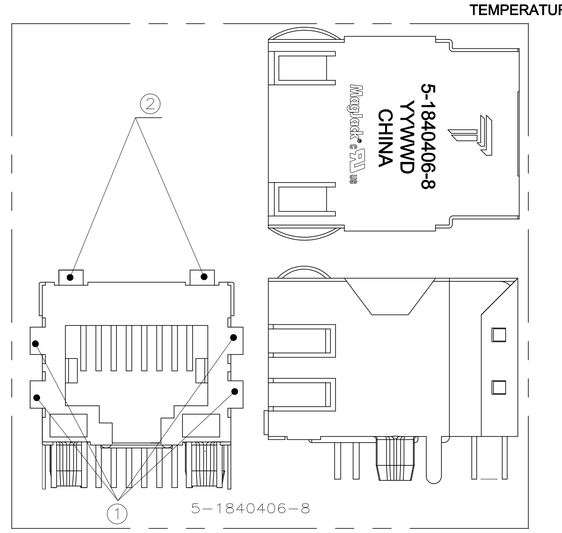

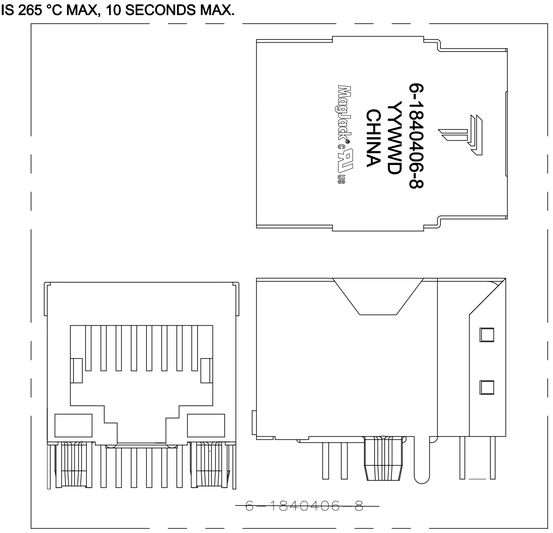

OBSOLETE	NO	NO	GREEN	YELLOW	~~6-1840406-8~~
	YES	YES	GREEN	YELLOW	5-1840406-8
	TOP FINGER 2	LEFT AND RIGHT FINGER 1	LED1 6	LED2 6	PART NUMBER

THIS DRAWING IS A CONTROLLED DOCUMENT.

DIMENSIONS: INCHES

TOLERANCES UNLESS OTHERWISE SPECIFIED:
0 PLC ± –
1 PLC ± –
2 PLC ± .010
3 PLC ± .005
4 PLC ± –
ANGLES ± –

PRODUCT SPEC 108-2100
APPLICATION SPEC –

DWN CLOUD ZENG 4MAY2006
CHK MICHAEL ZHANG 4MAY2006
APVD TEDDY XIONG 4MAY2006

trp CONNECTOR a bel group — DONGGUAN CHINA

MODEL NAME: MAGJACK SINGLE NON-POE

DESC: 1X1 326P13 10/100 TAB DOWN W/ LED

SIZE A1 | CAGE CODE | DRAWING NO C-1840406 | RESTRICTED TO –

CUSTOMER DRAWING | SCALE NTS | SHEET 1 OF 1 | REV F

Downloaded from Arrow.com.