System Lens Drivers

µ-step System Lens Driver for Digital Still Cameras

BU24038GW

General Description

BU24038GW is a system Lens Driver which is capable of µ-step driving and possible to configure a high precision and low noise lens driver system. This device performs µ-step driving control internally and can reduce a load of CPU. This device also has drivers for DC motor and voice coil motor, and is utilizable for multifunctional lens.

Features

- Built-in 9 Channel Drivers
  1ch to 8ch: Voltage Control Type H-Bridge (for 3 STM Systems)
  9ch: Current Control Type H-Bridge
- Built-in 3 Channel PI Driver Circuits
- Built-in 4 Channel Waveform Shaping Circuits
- Built-in PLL Circuit

Applications

- Digital Still Camera

Key Specifications

- Digital Power Supply Voltage: 2.7 V to 3.6 V
- Driver Power Supply Voltage: 2.7 V to 5.5 V
- Input/Output Current (1ch to 9ch): 500 mA (Max)
- Clock Operating Frequency: 1 MHz to 28 MHz
- ON-Resistance (1ch to 8ch): 1.5 Ω (Typ)
- ON-Resistance (9ch): 1.0 Ω (Typ)
- Operating Temperature Range: -20 °C to +85 °C

Package

	W (Typ) x D (Typ) x H (Max)
UCSP75M3 (56 pin)	3.80 mm x 3.80 mm x 0.85 mm

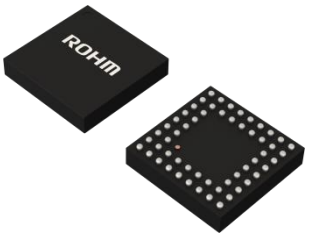

Typical Application Circuit

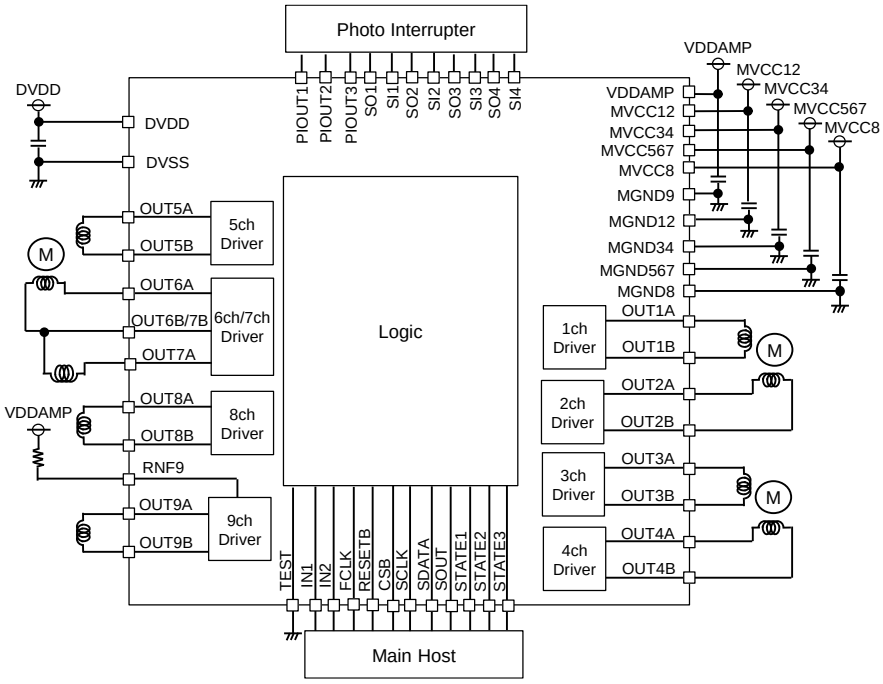

○Product structure : Silicon integrated circuit ○This product has no designed protection against radioactive rays

© 2010 ROHM Co., Ltd. All rights reserved.

Downloaded from Arrow.com.

Contents

General Description 1
Features 1
Applications 1
Key Specifications 1
Package 1
Typical Application Circuit 1
Contents 2
Pin Configuration 3
Pin Description 4
Block Diagram 5
Description of Blocks 6
Absolute Maximum Ratings 9
Recommended Operating Conditions 9
Electrical Characteristics 10
Typical Performance Curves 11
Timing Chart 14
Serial interface 15
Register Map 16
Application Example 17
I/O Equivalence Circuit 18
Operational Notes 20
Ordering Information 22
Marking Diagram 22
Physical Dimension and Packing Information 23
Revision History 24

© 2010 ROHM Co., Ltd. All rights reserved.

Downloaded from Arrow.com.

Pin Configuration

(Top view)

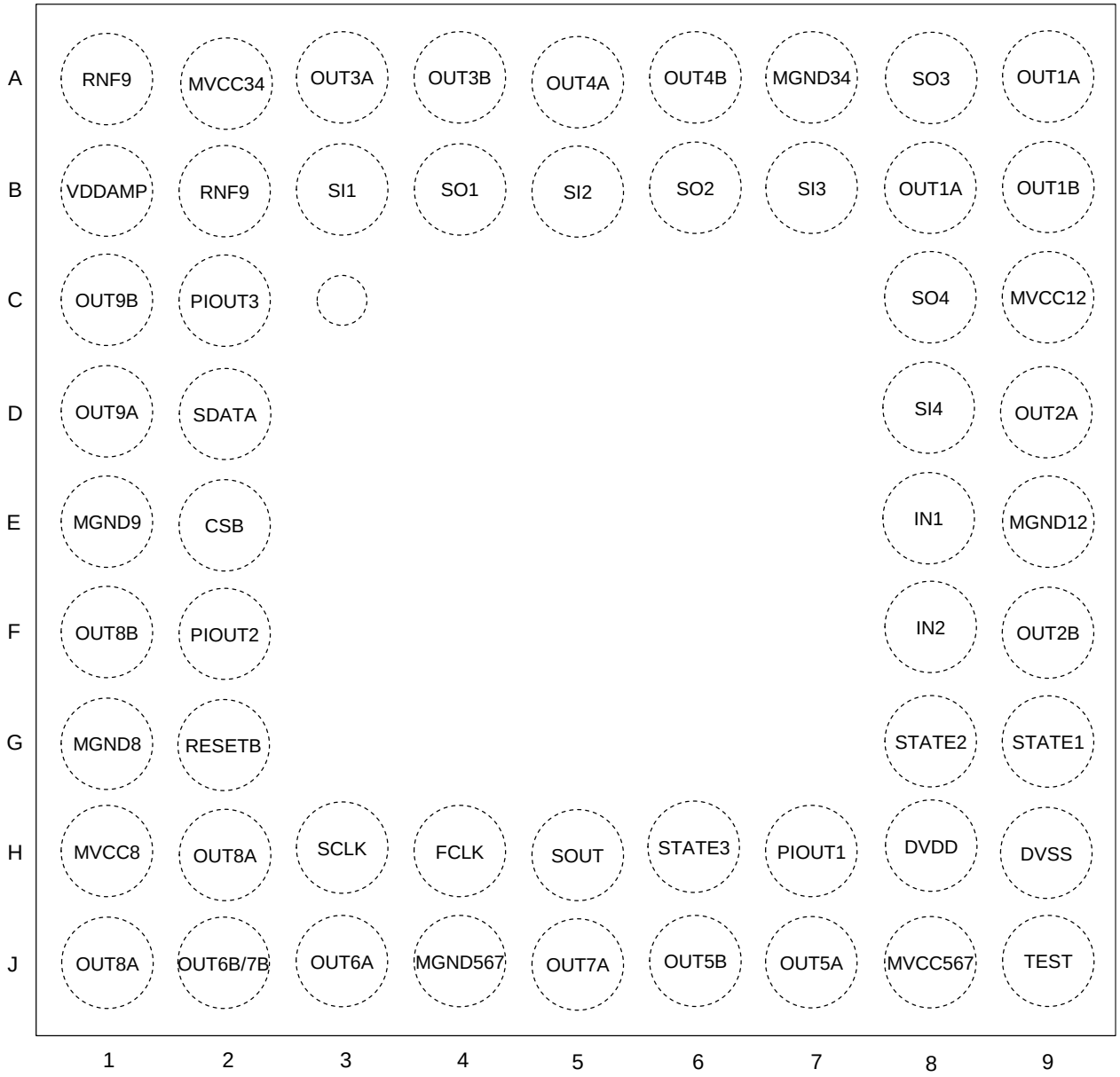

© 2010 ROHM Co., Ltd. All rights reserved.

Downloaded from Arrow.com.

Pin Description

Pin No.	Pin Name	Power Supply	Function	Pin No.	Pin Name	Power Supply	Function
A1(Note 1)	RNF9	-	9ch driver power supply	E8	IN1	DVDD	IN1 logic input
A2	MVCC34	-	3ch, 4ch driver power supply	E9	MGND12	-	1ch, 2ch driver ground
A3	OUT3A	MVCC34	3ch driver A output	F1	OUT8B	MVCC8	8ch drive B output
A4	OUT3B	MVCC34	3ch driver B output	F2	PIOUT2	DVDD	PI driver output2
A5	OUT4A	MVCC34	4ch driver A output	F8	IN2	DVDD	IN2 logic input
A6	OUT4B	MVCC34	4ch driver B output	F9	OUT2B	MVCC12	2ch driver B output
A7	MGND34	-	3ch, 4ch driver ground	G1	MGND8	-	8ch driver ground
A8	SO3	DVDD	Waveform shaping output3	G2	RESETB	DVDD	RESETB logic input
A9(Note 1)	OUT1A	MVCC12	1ch driver A output	G8	STATE2	DVDD	STATE2 logic input/output
B1	VDDAMP	-	9ch power supply of current driver control	G9	STATE1	DVDD	STATE1 logic input/output
B2(Note 1)	RNF9	-	9ch driver power supply	H1	MVCC8	-	8ch driver power supply
B3	SI1	DVDD	Waveform shaping input1	H2(Note 1)	OUT8A	MVCC8	8ch driver A output
B4	SO1	DVDD	Waveform shaping output1	H3	SCLK	DVDD	SCLK logic input
B5	SI2	DVDD	Waveform shaping input2	H4	FCLK	DVDD	FCLK logic input
B6	SO2	DVDD	Waveform shaping output2	H5	SOUT	DVDD	SOUT logic output
B7	SI3	DVDD	Waveform shaping input3	H6	STATE3	DVDD	STATE3 logic input/output
B8(Note 1)	OUT1A	MVCC12	1ch driver A output	H7	PIOUT1	DVDD	PI driver output1
B9	OUT1B	MVCC12	1ch driver B output	H8	DVDD	-	Digital power supply
C1	OUT9B	RNF9	9ch driver B output	H9	DVSS	-	Ground
C2	PIOUT3	DVDD	PI driver output3	J1(Note 1)	OUT8A	MVCC8	8ch driver A output
C8	SO4	DVDD	Waveform shaping output4	J2	OUT6B/7B	MVCC567	6ch, 7ch driver B output
C9	MVCC12	-	1ch, 2ch driver power supply	J3	OUT6A	MVCC567	6ch driver A output
D1	OUT9A	RNF9	9ch driver A output	J4	MGND567	-	5ch, 6ch, 7ch driver ground
D2	SDATA	DVDD	SDATA logic input	J5	OUT7A	MVCC567	7ch driver A output
D8	SI4	DVDD	Waveform shaping input4	J6	OUT5B	MVCC567	5ch driver B output
D9	OUT2A	MVCC12	2ch driver A output	J7	OUT5A	MVCC567	5ch driver A output
E1	MGND9	-	9ch driver ground	J8	MVCC567	-	5ch, 6ch, 7ch driver power supply
E2	CSB	DVDD	CSB logic input	J9	TEST	DVDD	TEST logic input

(Note 1) It is not possible to use corner pin only. (Corner pins are A1, A9, and J1)
Short between the pins A1 to B2, A9 to B8 and J1 to H2, or use only the B2, B8 and H2 pins.

© 2010 ROHM Co., Ltd. All rights reserved.

Downloaded from Arrow.com.

Block Diagram

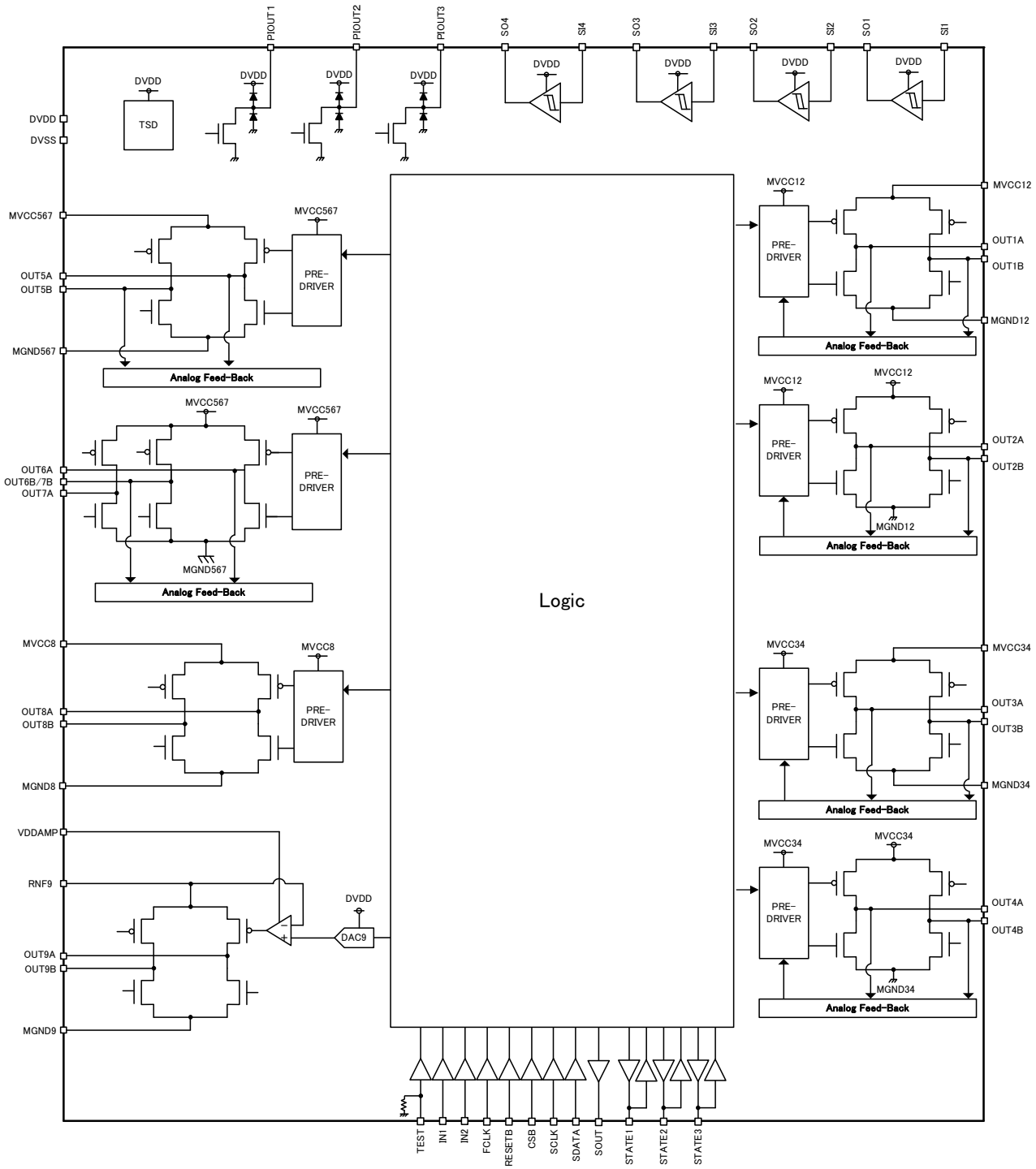

© 2010 ROHM Co., Ltd. All rights reserved.

Downloaded from Arrow.com.

Description of Blocks

Stepping Motor Driver (1ch to 6ch Driver)

Built-in PWM type stepping motor drivers.
Maximum 3 stepping motors can be driven independently.
Built-in D-class type voltage feedback circuit.
3ch/4ch drivers can also drive DC motor or voice coil motor individually.

(1) Control

Both Clock IN and Autonomous control are possible.

(a)Clock IN Control

Set the registers for the stepping motor control.
Stepping motor rotates in synchronization with clock input to the STATE1, STATE2 and/or STATE3 pin.
Mode of stepping motor control is selectable from μ-step, 1-2 phase excitation and 2 phase excitation. And the number of edge for electrical angle cycle is selectable from 4, 8, 32, 64, 128, 256, 512 or 1024.

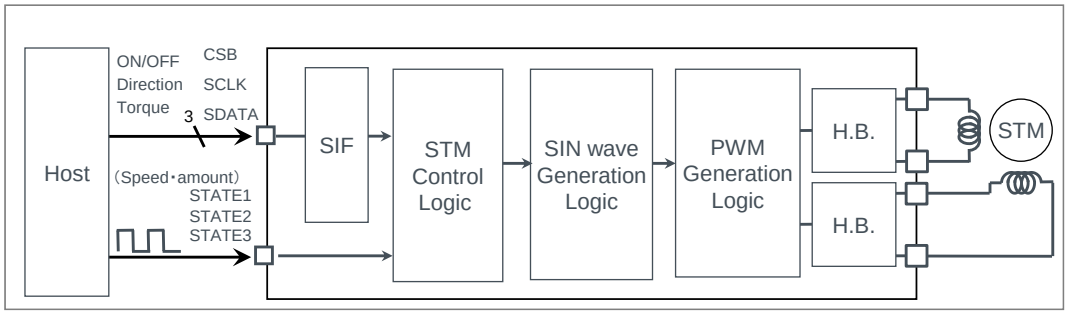

(b)Autonomous Control

Stepping motor rotates by setting the registers to drive the stepping motor.
It is possible to output from serial output (the SOUT pin) the status information which are operation command status (excecution:1, stop:0), cache register status and motor position, and to output signal (MO output) from the STATE1, STATE2 and STATE3 pin in synchronization with motor operation.
Mode of stepping motor control is selectable from μ-step (1024 portion), 1-2 phase excitation and 2 phase excitation.
Built-in Cache register enables to set next operation commands during motor operation, and continuous operation is possible.

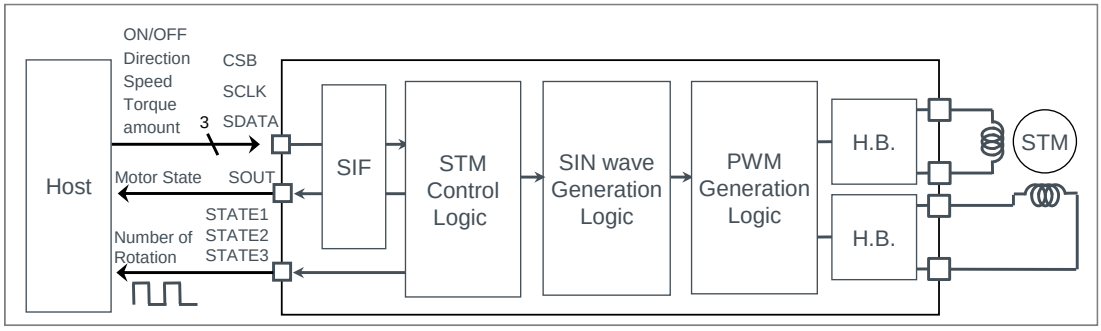

© 2010 ROHM Co., Ltd. All rights reserved.

Downloaded from Arrow.com.

Description of Blocks – continued

Voltage Driver (7ch, 8ch Driver)

Built-in PWM type voltage driver.

(1) Control

(a)Register Control

■7ch, 8ch driver speed control = OFF

PWM driving by setting the registers for PWM duty ratio, direction and ON/OFF.

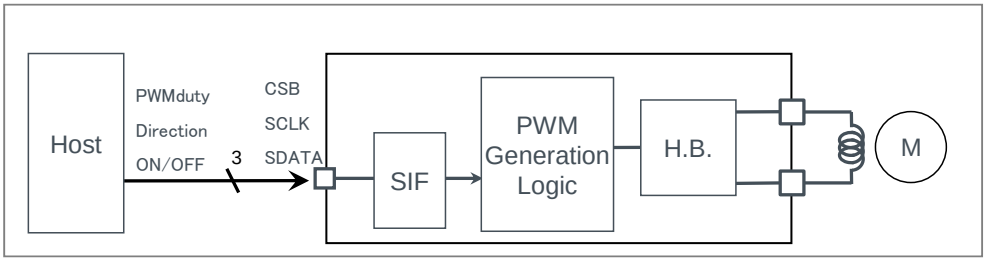

■8ch driver speed control = ON

Speed control driving by setting the registers for target speed value, PI filter value, direction and ON/OFF. Motor speed is detected from photo-interrupter signal and rotation speed is adjusted by comparing the target speed with the motor speed.

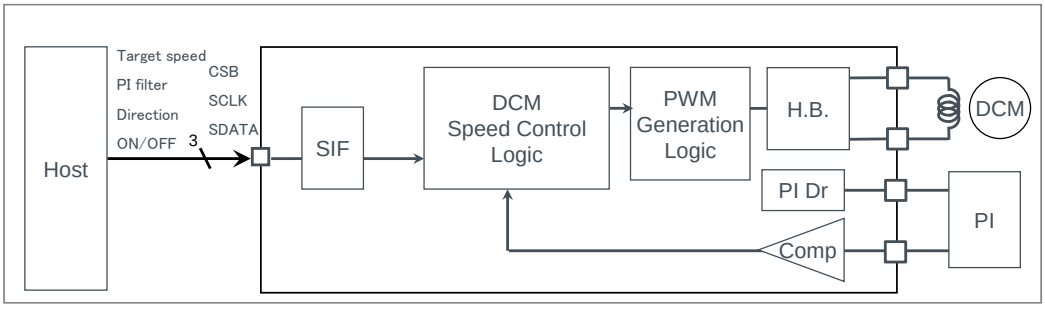

© 2010 ROHM Co., Ltd. All rights reserved.

Downloaded from Arrow.com.

Description of Blocks – continued

Current Driver (9ch Driver)

Built-in constant current driver.

A voltage at the RNF9 pin and an external resistor (R_{RNF}) value determine output current value. An internal high-precision amplifier (CMOS gate input) controls constant current. If any resistance component exists in wirings for the RNF9 pin and the external resistor (R_{RNF}), that might reduce accuracy and pay attention about wiring.

(1) Control

(a)Register Control

Constant current driving by setting the registers for output current value, direction and ON/OFF.

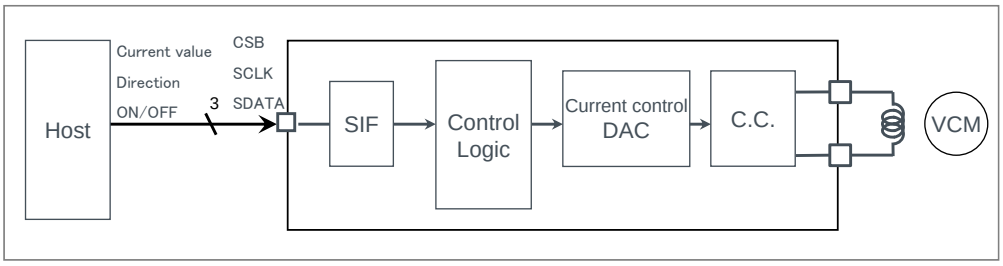

(b)External Pin Control 1

Constant current driving by setting the registers for output current value, and the IN1 and IN2 pin for direction and ON/OFF.

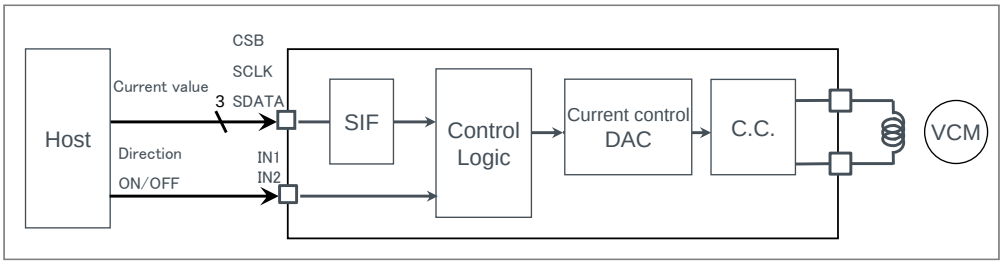

(b)External Pin Control 2

Constant current driving by setting the registers for output current value and direction, and the IN1 pin for ON/OFF.

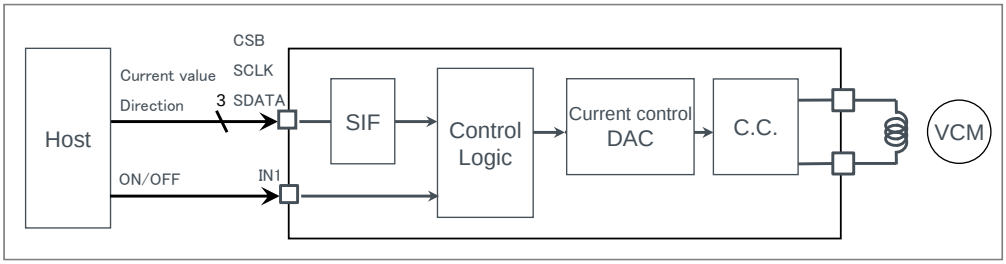

© 2010 ROHM Co., Ltd. All rights reserved.

Downloaded from Arrow.com.

Absolute Maximum Ratings (Ta=25 °C)

Parameter	Symbol	Rating	Unit	Remark
Supply Voltage	DVDD	-0.3 to +4.5	V	
	MVCC	-0.3 to +7.0	V	MVCC12, MVCC34, MVCC567, MVCC8, VDDAMP
Input Voltage	V_{IN}	-0.3 to supply voltage+0.3	V	
Input / Output Current *(Note 2)*	I_{IN}	500	mA	MVCC12, MVCC34, MVCC567, MVCC8, RNF9
		50	mA	PIOUT1, PIOUT2, PIOUT3
Maximum Junction Temperature	Tjmax	125	°C	
Storage Temperature Range	Tstg	-55 to +125	°C	
Power Dissipation*(Note 3)*	Pd	1.30	W	

Caution 1: *Operating the IC over the absolute maximum ratings may damage the IC. The damage can either be a short circuit between pins or an open circuit between pins and the internal circuitry. Therefore, it is important to consider circuit protection measures, such as adding a fuse, in case the IC is operated over the absolute maximum ratings.*

Caution 2: *Should by any chance the maximum junction temperature rating be exceeded the rise in temperature of the chip may result in deterioration of the properties of the chip. In case of exceeding this absolute maximum rating, design a PCB with power dissipation taken into consideration by increasing board size and copper area so as not to exceed the maximum junction temperature rating.*

(Note 2): Must not exceed Pd.

(Note 3): When use at Ta=25 °C or more, derate 13 mW per 1 °C
(At mounting 50 mm x 58 mm x 1.75 mm glass epoxy board.)

Recommended Operating Conditions

Parameter	Symbol	Min	Typ	Max	Unit	Remark
Digital Power Supply Voltage	DVDD	2.7	3.0	3.6	V	DVDD≤MVCC
Driver Power Supply Voltage	MVCC	2.7	5.0	5.5	V	MVCC12, MVCC34, MVCC567, MVCC8, VDDAMP
Clock Operating Frequency	f_{FCLK}	1	-	28	MHz	Reference clock
Operating Temperature	Topr	-20	+25	+85	°C	

© 2010 ROHM Co., Ltd. All rights reserved.

Downloaded from Arrow.com.

Electrical Characteristics

(Unless otherwise specified Ta=25 °C, DVDD=3.0 V, MVCC12=MVCC34=MVCC567=MVCC8=VDDAMP=5.0 V)

Parameter	Symbol	Min	Typ	Max	Unit	Conditions
<Current Consumption>						
Quiescent Current	I_{SSD}	-	0	10	µA	DVDD power supply CMD_RS=0
	I_{SSM}	-	0	10	µA	MVCC power supply CMD_RS=0
Operational Current	I_{DDD}	-	14	19	mA	DVDD power supply RESETB=H CMD_RS=STB=CLK_EN=1 f_{FCLK} = 24 MHz CLK_DIV setting: 0h No load
<Logic Block>						
Low-Level Input Voltage	V_{IL}	DVSS	-	0.3 x DVDD	V	
High-Level Input Voltage	V_{IH}	0.7 x DVDD	-	DVDD	V	
Low-Level Input Current	I_{IL}	0	-	10	µA	V_{IL}=DVSS
High-Level Input Current	I_{IH}	0	-	10	µA	V_{IH}=DVDD
Low-Level Output Voltage	V_{OL}	DVSS	-	0.2 x DVDD	V	I_{OL} = 1.0 mA
High-Level Output Voltage	V_{OH}	0.8 x DVDD	-	DVDD	V	I_{OH} = 1.0 mA
<PI Driver Circuit>						
Output Voltage	V_{PIO}	-	0.15	0.5	V	I_{IH} = 30 mA
<Waveform Shaping Circuit>						
High Detection Voltage	V_{THH}	-	-	1.9	V	DVDD = 3.25V
Low Detection Voltage	V_{THL}	0.9	-	-	V	DVDD = 3.25V
Hysteresis	V_{HYS}	0.2	-	0.6	V	DVDD = 3.25V
<Voltage Driver Block 1ch-6ch>						
ON-Resistance	R_{ON}	-	1.5	2.0	Ω	I_O = ±100 mA (sum of high and low sides)
OFF-Leak Current	I_{OZ}	-10	0	+10	µA	Output HiZ setting
Accuracy of Average Voltage between Output Pins	V_{DIFF}	-5	-	+5	%	different output voltage setting: 2Bh
<Voltage Driver Block 7ch, 8ch>						
ON-Resistance	R_{ON}	-	1.5	2.0	Ω	I_O = ±100 mA (sum of high and low sides)
OFF-Leak Current	I_{OZ}	-10	0	+10	µA	Output HiZ setting
<Current Driver Block 9ch>						
ON-Resistance	R_{ON}	-	1.0	1.5	Ω	I_O = ±100 mA (sum of high and low sides)
OFF-Leak Current	I_{OZ}	-10	0	+10	µA	Output HiZ setting
Output Current	I_O	190	200	210	mA	9_IOUT setting: 80h R_{RNF}=1 Ω

© 2010 ROHM Co., Ltd. All rights reserved.

Downloaded from Arrow.com.

Typical Performance Curves

(Unless otherwise specified Ta=25 °C, DVDD=3.0 V, MVCC12=MVCC34=MVCC567=MVCC8=VDDAMP=5.0 V)

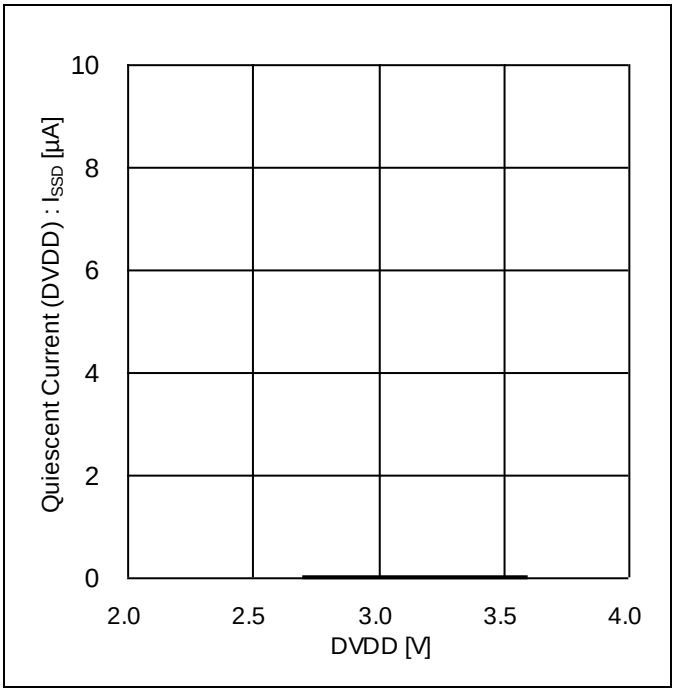

Figure 1. Quiescent Current (DVDD) vs DVDD

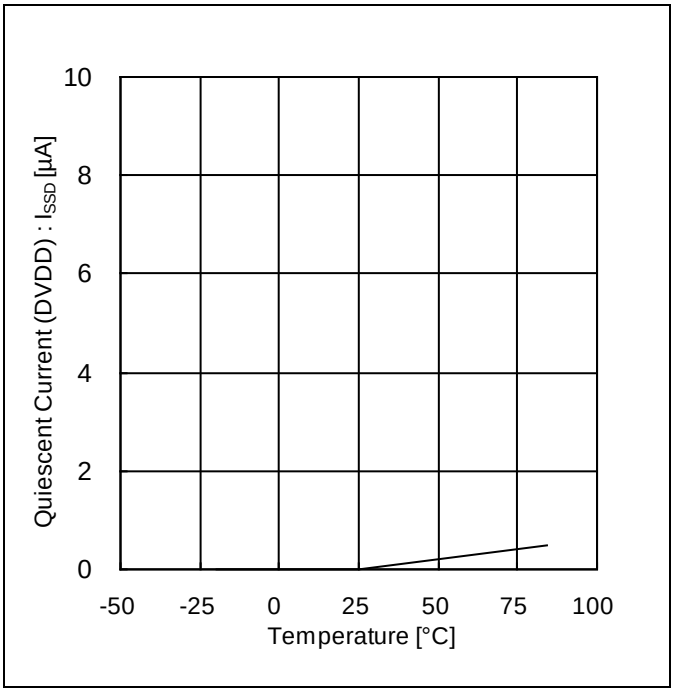

Figure 2. Quiescent Current (DVDD) vs Temperature

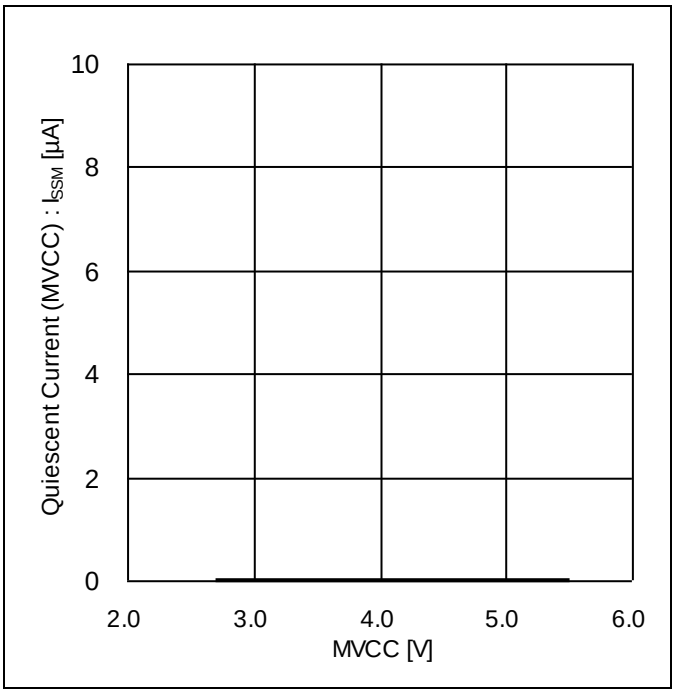

Figure 3. Quiescent Current (MVCC) vs MVCC

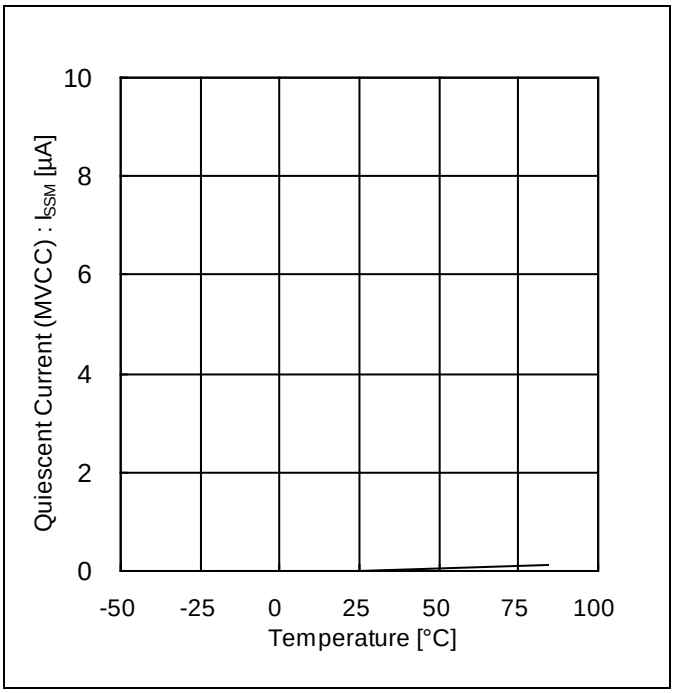

Figure 4. Quiescent Current (MVCC) vs Temperature

© 2010 ROHM Co., Ltd. All rights reserved.

Downloaded from Arrow.com.

Typical Performance Curves – continued

(Unless otherwise specified Ta=25 °C, DVDD=3.0 V, MVCC12=MVCC34=MVCC567=MVCC8=VDDAMP=5.0 V)

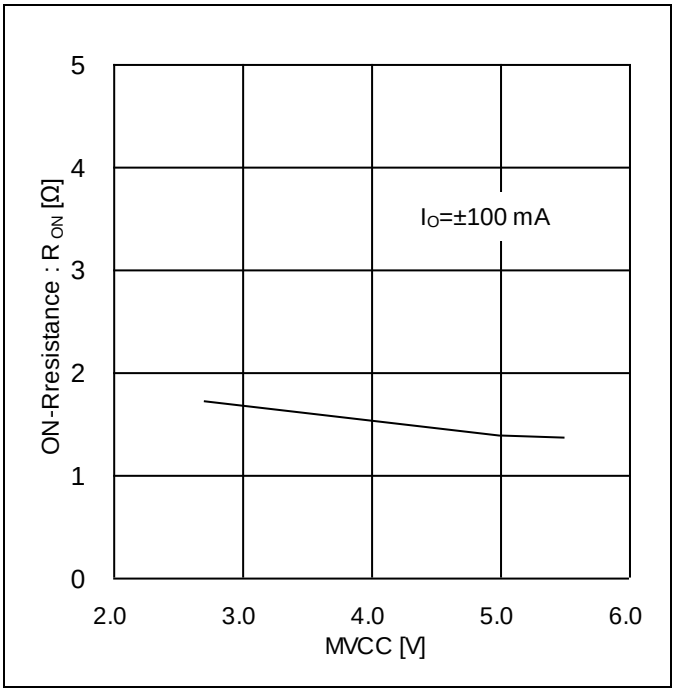

Figure 5. ON-Resistance vs MVCC
(1ch to 8ch Driver Block)

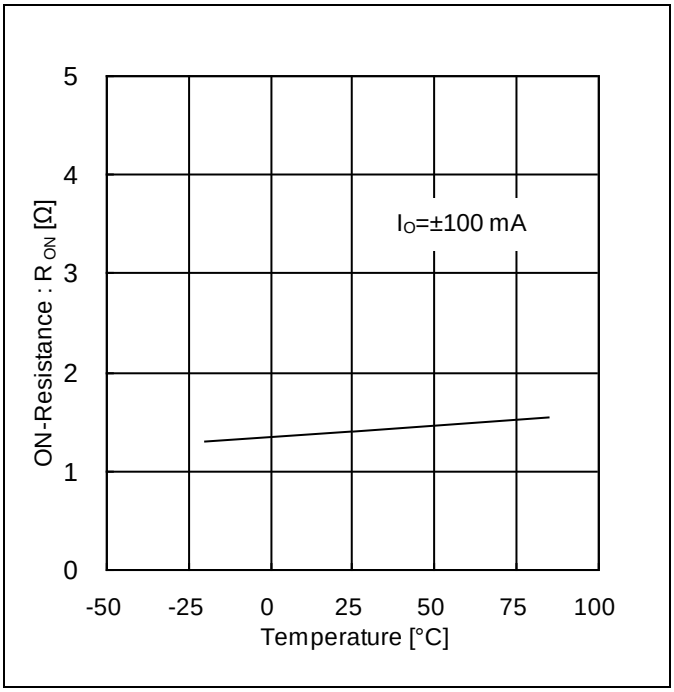

Figure 6. ON-Resistance vs Temperature
(1ch to 8ch Driver Block)

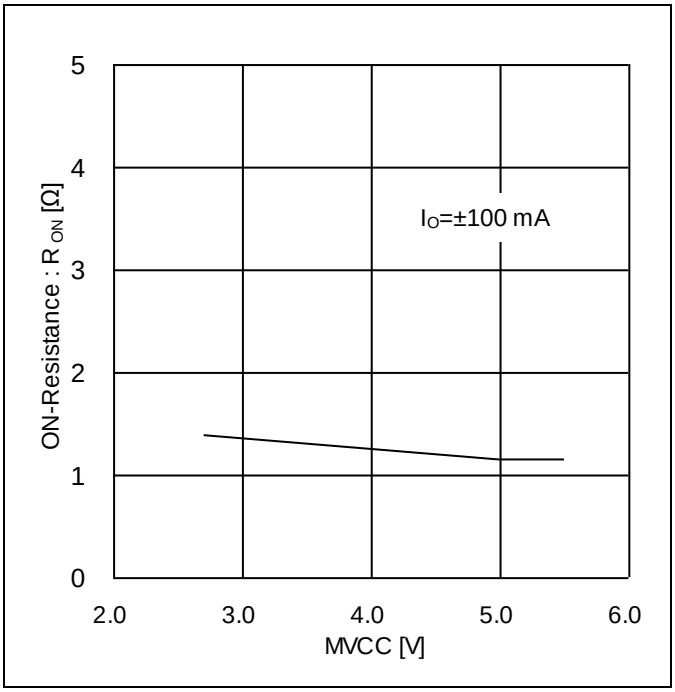

Figure 7. ON-Resistance vs MVCC
(9ch Driver Block)

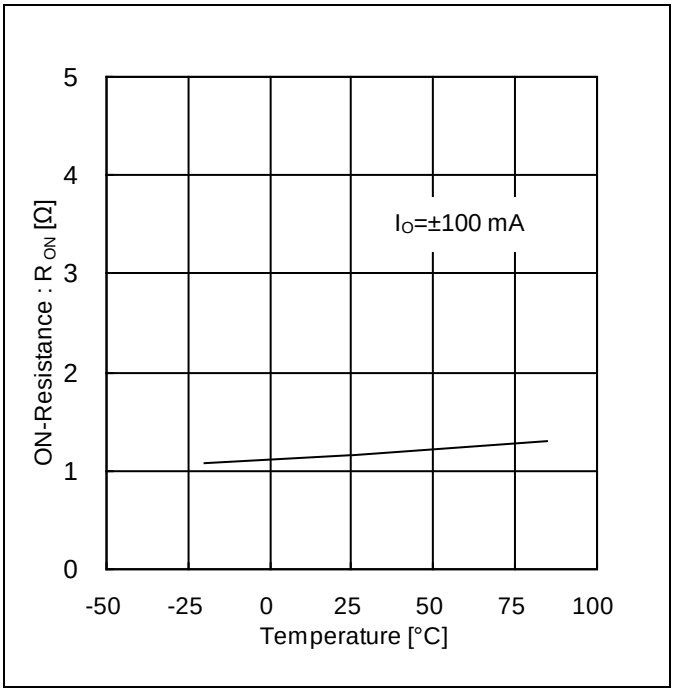

Figure 8. ON-Resistance vs Temperature
(9ch Driver Block)

© 2010 ROHM Co., Ltd. All rights reserved.

Downloaded from Arrow.com.

Typical Performance Curves – continued

(Unless otherwise specified Ta=25 °C, DVDD=3.0 V, MVCC12=MVCC34=MVCC567=MVCC8=VDDAMP=5.0 V)

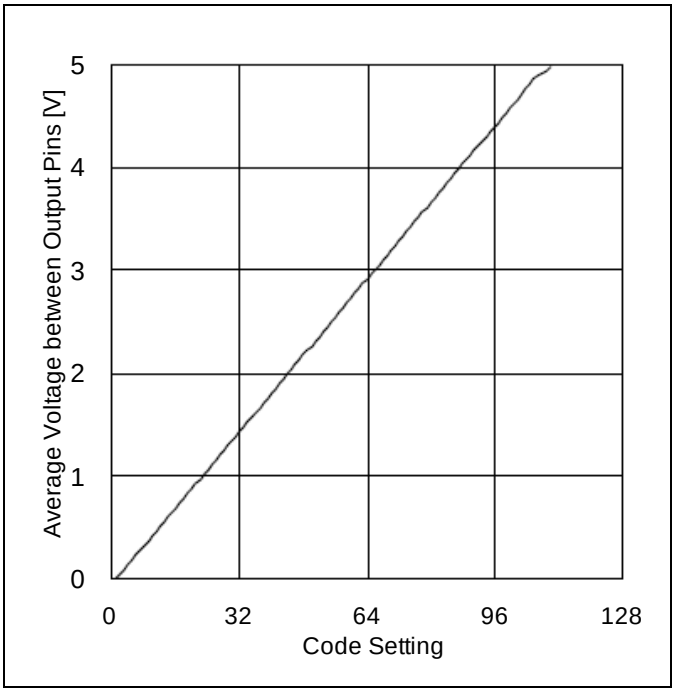

Figure 9. Average Voltage between Output Pins vs Code Setting
(Voltage Driver Block)

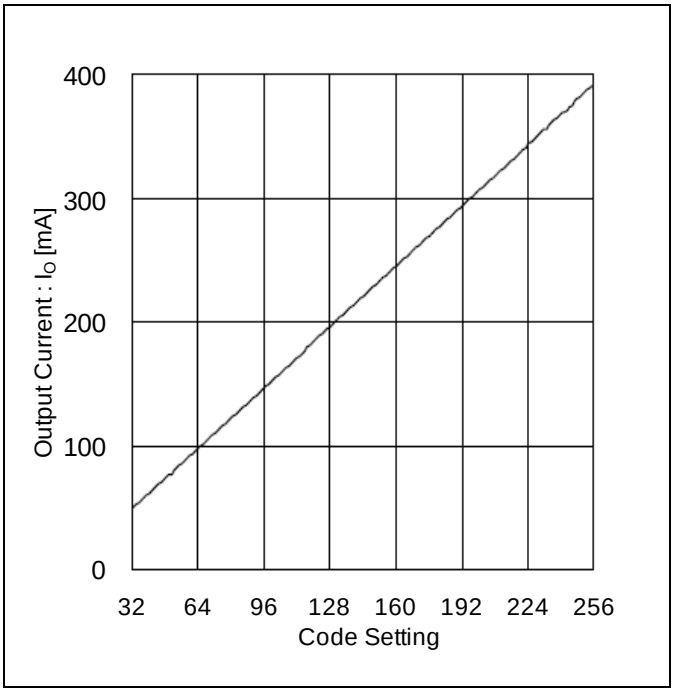

Figure 10. Output Current vs Code Setting
(Current Driver Block, R_{RNF}=1.0 Ω, R_L=5.0 Ω)

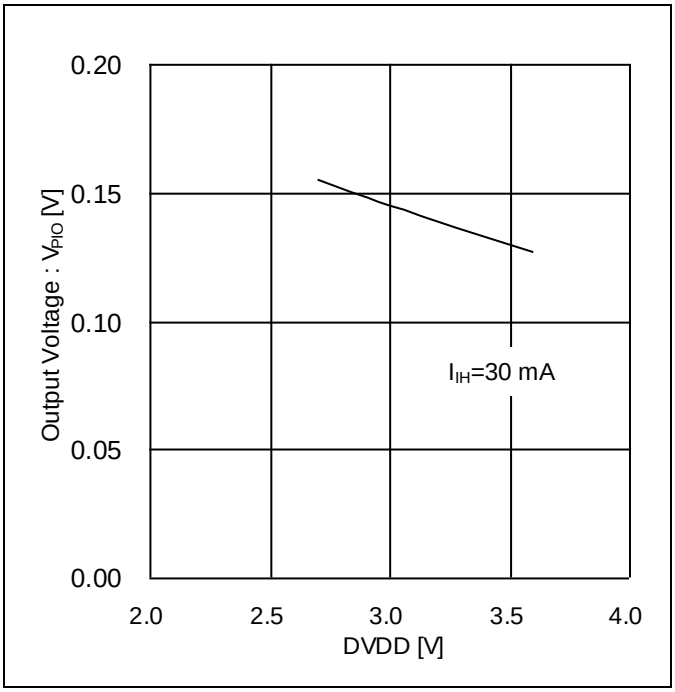

Figure 11. Output Voltage vs DVDD
(PI Driver Circuit)

© 2010 ROHM Co., Ltd. All rights reserved.

Downloaded from Arrow.com.

Timing Chart

(Unless otherwise specified, Ta=25 °C, DVDD=3.0 V)

Parameter	Symbol	Design Value
SCLK Input Cycle	t_{SCLK}	100 ns or more
SCLK Low-Level Input Time	t_{SCLKL}	50 ns or more
SCLK High-Level Input Time	t_{SCLKH}	50 ns or more
SDATA Setup Time	t_{SSDATA}	50 ns or more
SDATA Hold Time	t_{HSDATA}	50 ns or more
CSB High-Level Input Time	t_{CSBH}	380 ns or more
CSB Setup Time	t_{SCSB}	50 ns or more
CSB Hold Time	t_{HCSB}	50 ns or more
RESETB Low-Level Input Time	$t_{RESETBL}$	350 ns or more
FCLK Input Cycle	t_{FCLK}	36 ns or more
FCLK Low-Level Input Time	t_{FCLKL}	18 ns or more
FCLK High-Level Input Time	t_{FCLKH}	18 ns or more

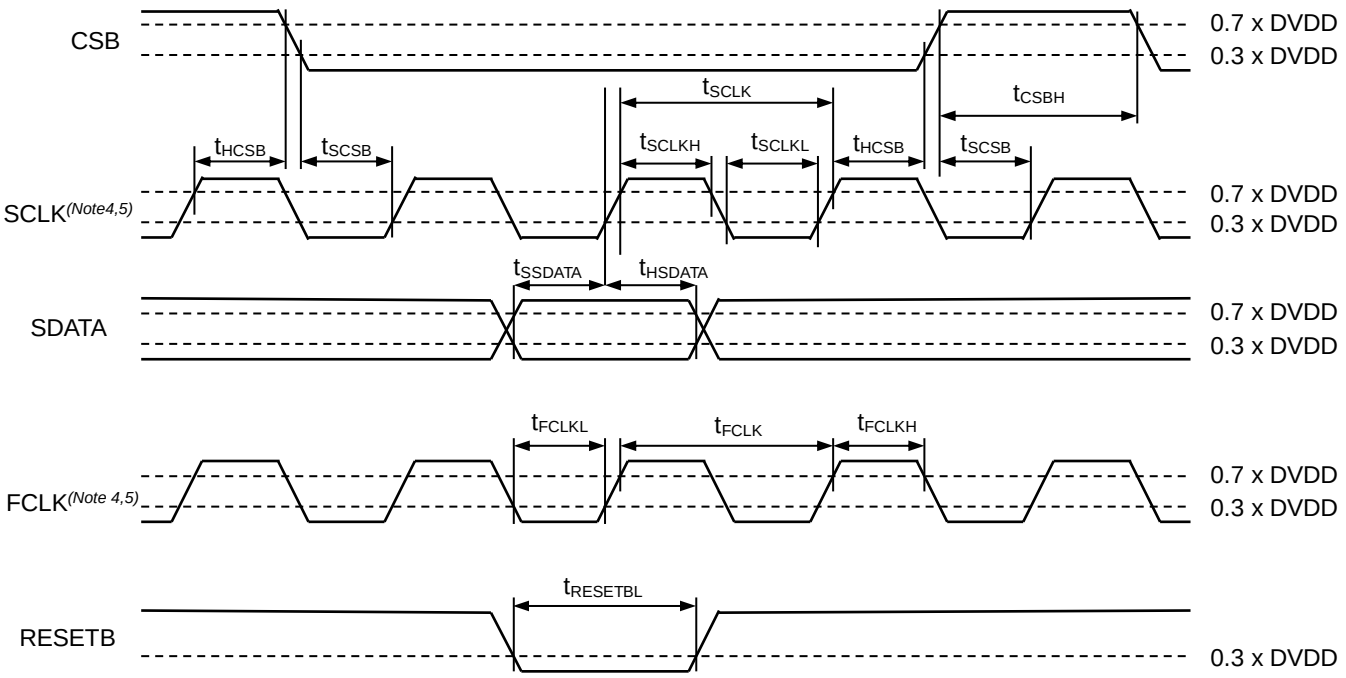

(Note 4) RESETB and FCLK is asynchronous with SCLK.
(Note 5) The duty of FCLK and SCLK is arbitrary after observing the above table.

© 2010 ROHM Co., Ltd. All rights reserved.

Downloaded from Arrow.com.

Serial interface

Control command is 16-bit serial input (MSB first) and is sent via the CSB, the SCLK, and the SDATA pins.
Higher 4 bits specify addresses and lower 12 bits specify data. Data of each bit is sent via the SDATA pin and taken at a rising edge of SCLK. The Data taken during CSB 'L' period is valid and is written in register at a rising edge of CSB.
SOUT output is 12bit data and synchronous with a falling edge of SCLK.

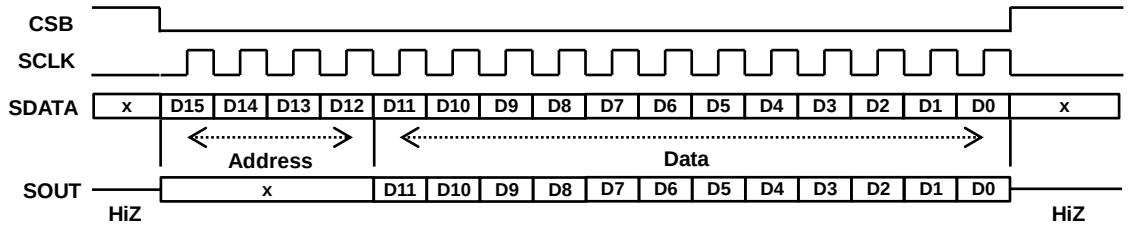

© 2010 ROHM Co., Ltd. All rights reserved.

Downloaded from Arrow.com.

Register Map(Note 6,7,8,9)

Address[3:0]				Data[11:0]											
15	14	13	12	11	10	9	8	7	6	5	4	3	2	1	0
0	0	0	0	A_Mode[1:0]		A_SEL[2:0]			A_different_output_voltage[6:0]						
0	0	0	1	0	0	0	0	A_Cycle[5:0]						0	0
				0	0	1	0	A_Cycle[13:6]							
				0	1	1	0	A_BEXC	0	0	A_BSL	A_AEXC	0	0	A_ASL
				1	1	1	0	0	0	A_POS[1:0]		0	0	A_PS	A_Stop
0	0	1	0	A_EN	A_RT	A_Pulse[9:0]									
0	0	1	1	A_ACT	A_BUSY	B_ACT	B_BUSY	C_ACT	C_BUSY	L	L	L	L	L	L
0	1	0	0	B_Mode[1:0]		B_SEL[2:0]			B_different_output_voltage [6:0]						
0	1	0	1	0	0	0	0	B_Cycle[5:0]						0	0
				0	0	1	0	B_Cycle[13:6]							
				0	1	1	0	B_BEXC	0	0	B_BSL	B_AEXC	0	0	B_ASL
				1	0	0	0	0	0	3_CHOP[1:0]		0	0	4_CHOP[1:0]	
				1	0	1	3_State_CTL[1:0]		3_PWM_Duty[6:0]						
				1	1	0	4_State_CTL[1:0]		4_PWM_Duty[6:0]						
				1	1	1	0	0	0	B_POS[1:0]		0	0	B_PS	B_Stop
0	1	1	0	B_EN	B_RT	B_Pulse[9:0]									
0	1	1	1	A_Position[9:6]				B_Position[9:6]				C_Position[9:6]			
1	0	0	0	C_Mode[1:0]		C_SEL[2:0]			C_different_output_voltage[6:0]						
1	0	0	1	0	0	0	0	C_Cycle[5:0]						0	0
				0	0	1	0	C_Cycle[13:6]							
				0	1	1	0	C_BEXC	0	0	C_BSL	C_AEXC	0	0	C_ASL
				1	1	1	0	0	0	C_POS[1:0]		0	0	C_PS	C_Stop
1	0	1	0	C_EN	C_RT	C_Pulse[9:0]									
1	0	1	1	0	0	0	0	0	0	Edge	0	0	C_CTL	B_CTL	A_CTL
				0	0	1	0	0	0	0	67_SEL	0	EXT_CTL[2:0]		
1	1	0	0	0	0	Chopping[1:0]		CacheM	0	0	CLK_EN	CLK_DIV[3:0]			
1	1	0	1	0	0	0	0	0	0	0	0	0	PI_CTL3	PI_CTL2	PI_CTL1
				0	0	1	0	0	0	0	0	0	0	7_CHOP[1:0]	
				0	1	0	7_State_CTL[1:0]		7_PWM_Duty[6:0]						
				0	1	1	0	8_TARSP[7:0]							
				0	1	1	1	0	8_PSP[2:0]			0	8_ISP[2:0]		
				1	0	0	0	0	0	0	0	0	0	SPC_Limit[1:0]	
				1	0	1	0	0	0	0	8_SPEN	0	0	8_CHOP[1:0]	
				1	1	0	8_State_CTL[1:0]		8_PWM_Duty[6:0]						
1	1	1	0	0	0	0	0	9_IOUT[7:0]							
				0	1	0	0	0	0	0	0	0	0	9_State_CTL[1:0]	
				1	0	1	0	0	0	0	0	HYS4	HYS3	HYS2	HYS1
				1	1	0	0	0	0	0	STB	0	0	STM_RS	CMD_RS
Other than the above				Setting Prohibited											

(Note 6) The notations A, B and C in the register map correspond to Ach, Bch and Cch respectively. Ach is defined as 1ch and 2ch driver output, Bch as 3ch and 4ch, Cch as 5ch and 6ch driver output.
(Note 7) After reset, the initial settings are stored in all registers.
(Note 8) The data at register address 4'b0011 and 4'b0111 (ACT, BUSY, POSITION[9:6]) is internal register value and is output from the SOUT pin. 'L' in the above table indicates Low output.
(Note 9) Regarding Mode, different_output_voltage, Cycle, EN, and RT registers, the data written right before the access to the Pulse register is valid and determined at a rising edge of CSB after the access to the Pulse register. (The Mode, different_output_voltage, Cycle, EN, RT, and Pulse registers have Cache registers. Any registers other than them do not have Cache registers.)

© 2010 ROHM Co., Ltd. All rights reserved.

Downloaded from Arrow.com.

Application Example

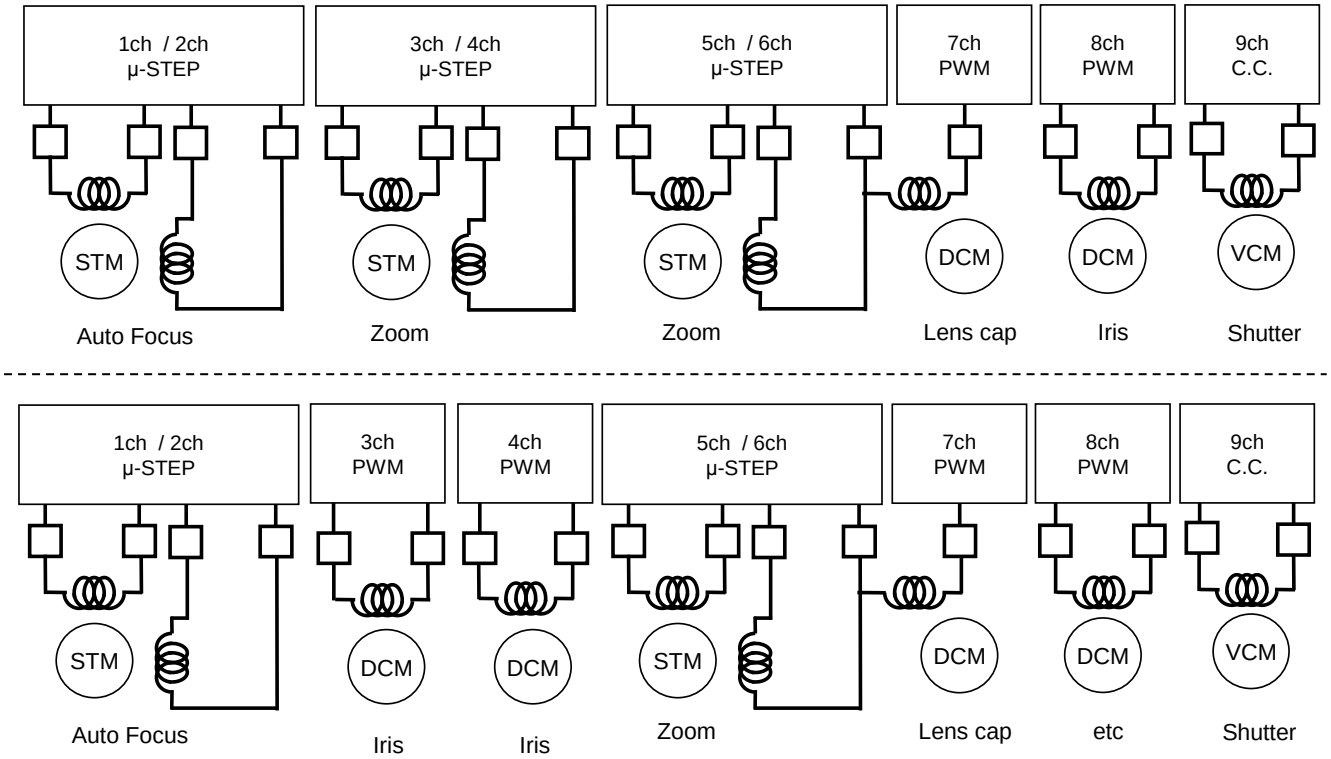

© 2010 ROHM Co., Ltd. All rights reserved.

Downloaded from Arrow.com.

I/O Equivalence Circuit

Pin	Equivalent Circuit Diagram	Pin	Equivalent Circuit Diagram
RESETB FCLK CSB SCLK SDATA IN1 IN2	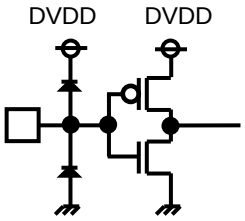	TEST*(Note 10)*	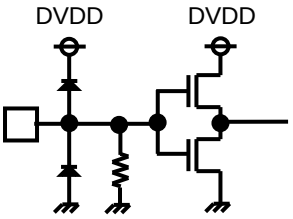
SOUT	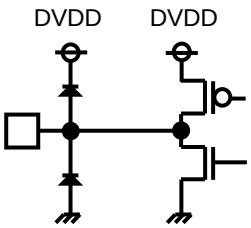	STATE1 STATE2 STATE3	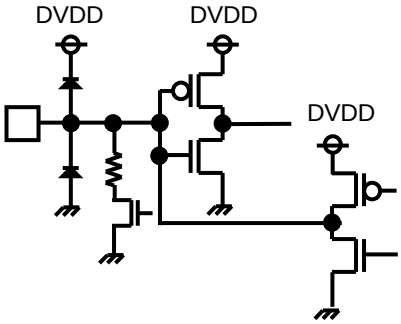
SI1 SI2 SI3 SI4	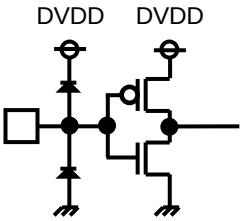	SO1 SO2 SO3 SO4	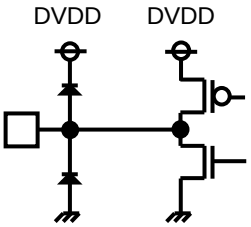
PIOUT1 PIOUT2 PIOUT3	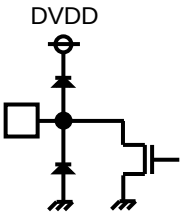	OUT1A OUT1B OUT2A OUT2B	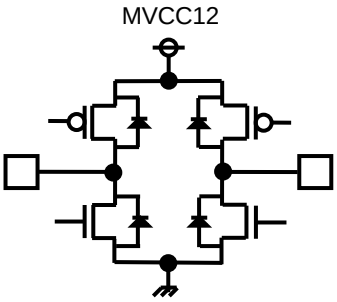
OUT3A OUT3B OUT4A OUT4B	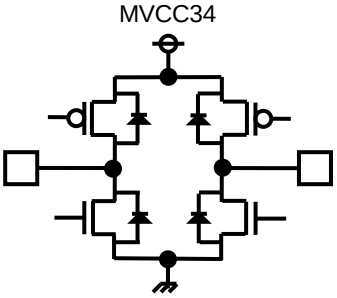	OUT5A OUT5B OUT6A OUT6B/7B OUT7A	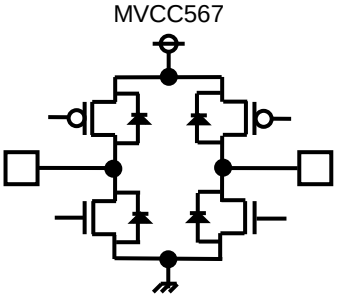

(Note 10) Short the TEST pin to DVSS.

© 2010 ROHM Co., Ltd. All rights reserved.

Downloaded from Arrow.com.

I/O Equivalence Circuit - continued

Pin	Equivalent Circuit Diagram	Pin	Equivalent Circuit Diagram
OUT8A OUT8B	MVCC8 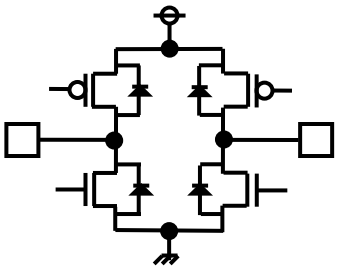	OUT9A OUT9B	RNF9 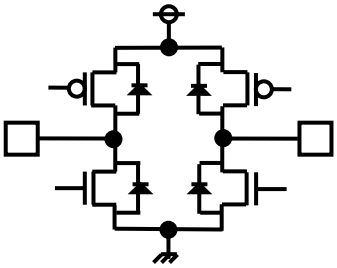

© 2010 ROHM Co., Ltd. All rights reserved.

Downloaded from Arrow.com.

Operational Notes

1. **Reverse Connection of Power Supply**
   Connecting the power supply in reverse polarity can damage the IC. Take precautions against reverse polarity when connecting the power supply, such as mounting an external diode between the power supply and the IC's power supply pins.

2. **Power Supply Lines**
   Design the PCB layout pattern to provide low impedance supply lines. Separate the ground and supply lines of the digital and analog blocks to prevent noise in the ground and supply lines of the digital block from affecting the analog block. Furthermore, connect a capacitor to ground at all power supply pins. Consider the effect of temperature and aging on the capacitance value when using electrolytic capacitors.

3. **Ground Voltage**
   Ensure that no pins are at a voltage below that of the ground pin at any time, even during transient condition.

4. **Ground Wiring Pattern**
   When using both small-signal and large-current ground traces, the two ground traces should be routed separately but connected to a single ground at the reference point of the application board to avoid fluctuations in the small-signal ground caused by large currents. Also ensure that the ground traces of external components do not cause variations on the ground voltage. The ground lines must be as short and thick as possible to reduce line impedance.

5. **Recommended Operating Conditions**
   The function and operation of the IC are guaranteed within the range specified by the recommended operating conditions. The characteristic values are guaranteed only under the conditions of each item specified by the electrical characteristics.

6. **Inrush Current**
   When power is first supplied to the IC, it is possible that the internal logic may be unstable and inrush current may flow instantaneously due to the internal powering sequence and delays, especially if the IC has more than one power supply. Therefore, give special consideration to power coupling capacitance, power wiring, width of ground wiring, and routing of connections.

7. **Testing on Application Boards**
   When testing the IC on an application board, connecting a capacitor directly to a low-impedance output pin may subject the IC to stress. Always discharge capacitors completely after each process or step. The IC's power supply should always be turned off completely before connecting or removing it from the test setup during the inspection process. To prevent damage from static discharge, ground the IC during assembly and use similar precautions during transport and storage.

8. **Inter-pin Short and Mounting Errors**
   Ensure that the direction and position are correct when mounting the IC on the PCB. Incorrect mounting may result in damaging the IC. Avoid nearby pins being shorted to each other especially to ground, power supply and output pin. Inter-pin shorts could be due to many reasons such as metal particles, water droplets (in very humid environment) and unintentional solder bridge deposited in between pins during assembly to name a few.

9. **Unused Input Pins**
   Input pins of an IC are often connected to the gate of a MOS transistor. The gate has extremely high impedance and extremely low capacitance. If left unconnected, the electric field from the outside can easily charge it. The small charge acquired in this way is enough to produce a significant effect on the conduction through the transistor and cause unexpected operation of the IC. So unless otherwise specified, unused input pins should be connected to the power supply or ground line.

© 2010 ROHM Co., Ltd. All rights reserved.

Downloaded from Arrow.com.

Operational Notes – continued

10. Regarding the Input Pin of the IC

In the construction of this IC, P-N junctions are inevitably formed creating parasitic diodes or transistors. The operation of these parasitic elements can result in mutual interference among circuits, operational faults, or physical damage. Therefore, conditions which cause these parasitic elements to operate, such as applying a voltage to an input pin lower than the ground voltage should be avoided. Furthermore, do not apply a voltage to the input pins when no power supply voltage is applied to the IC. Even if the power supply voltage is applied, make sure that the input pins have voltages within the values specified in the electrical characteristics of this IC.

11. Ceramic Capacitor

When using a ceramic capacitor, determine a capacitance value considering the change of capacitance with temperature and the decrease in nominal capacitance due to DC bias and others.

12. Thermal Shutdown Circuit (TSD)

This IC has a built-in thermal shutdown circuit that prevents heat damage to the IC. Normal operation should always be within the IC's maximum junction temperature rating. If however the rating is exceeded for a continued period, the junction temperature (Tj) will rise which will activate the TSD circuit that will turn OFF power output pins. When the Tj falls below the TSD threshold, the circuits are automatically restored to normal operation.
Note that the TSD circuit operates in a situation that exceeds the absolute maximum ratings and therefore, under no circumstances, should the TSD circuit be used in a set design or for any purpose other than protecting the IC from heat damage.

13. Disturbance Light

In a device where a portion of silicon is exposed to light such as in a WL-CSP and chip products, IC characteristics may be affected due to photoelectric effect. For this reason, it is recommended to come up with countermeasures that will prevent the chip from being exposed to light.

© 2010 ROHM Co., Ltd. All rights reserved.

Downloaded from Arrow.com.

Ordering Information

B	U	2	4	0	3	8	G	W	-	E 2

Package
GW: UCSP75M3

Packaging and forming specification
E2: Embossed tape and reel

Marking Diagram

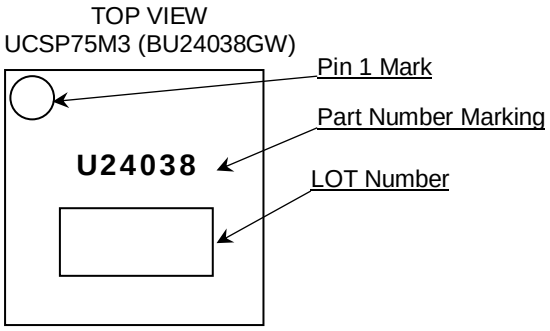

© 2010 ROHM Co., Ltd. All rights reserved.

Downloaded from Arrow.com.

Physical Dimension and Packing Information

Package Name	UCSP75M3 (BU24038GW)

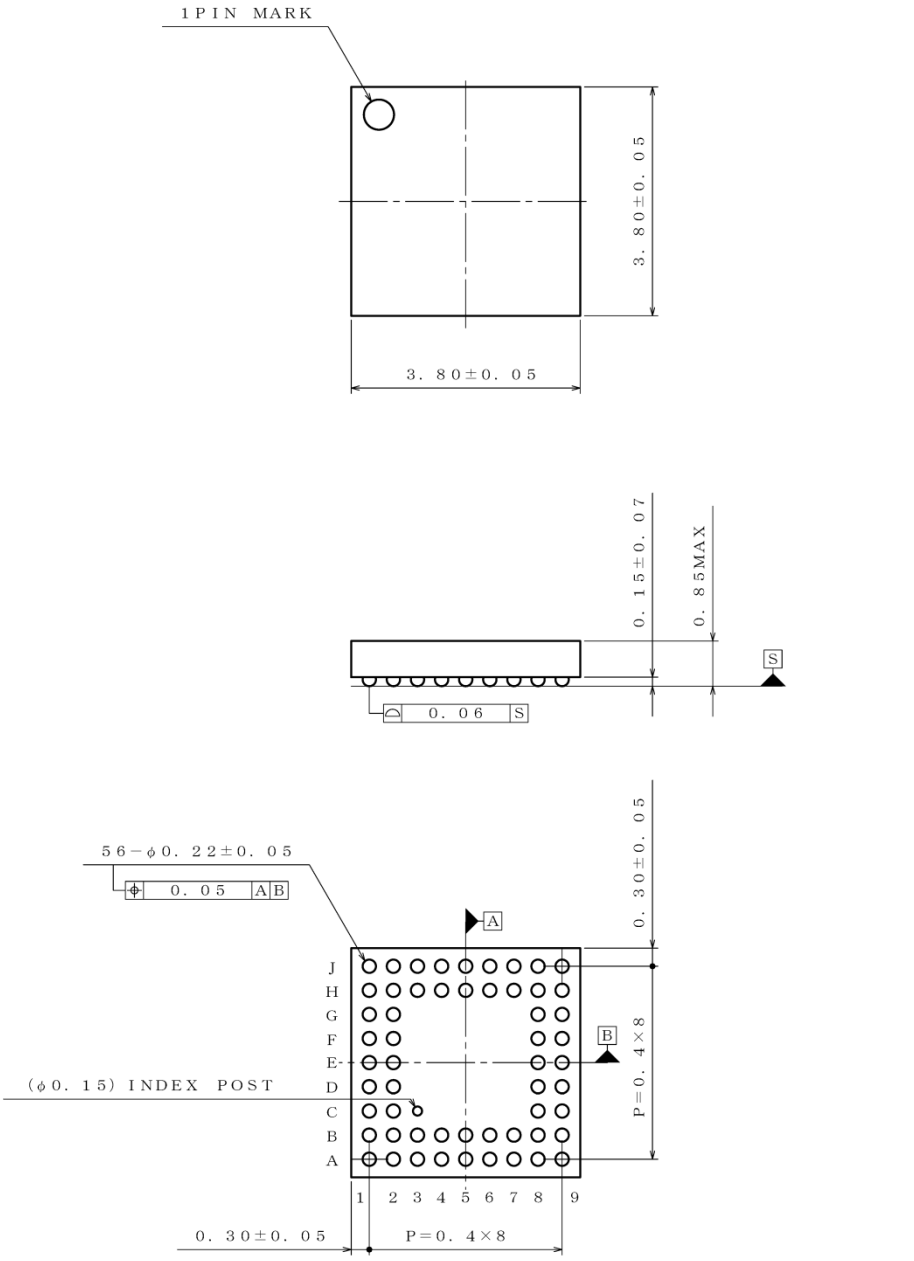

< Tape and Reel Information >

Tape	Embossed carrier tape
Quantity	2500pcs
Direction of feed	E2 The direction is the pin 1 of product is at the upper left when you hold reel on the left hand and you pull out the tape on the right hand

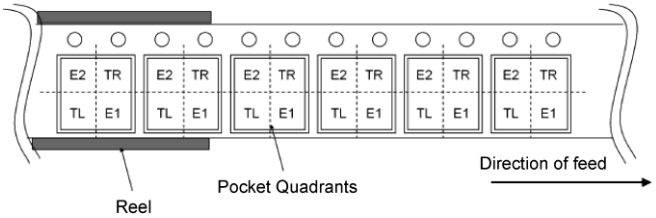

© 2010 ROHM Co., Ltd. All rights reserved.

Downloaded from Arrow.com.

Revision History

Date	Revision	Changes
14.May.2010	001	New Release
18.Apr.2013	002	Update some English words, sentences, descriptions, grammar and format.
12.Mar.2019	003	In the “Typical Application Circuit” names of connected power supply are added. In the “Absolute Maximum Ratings” the “Maximum Junction Temperature” is added. In the “Absolute Maximum Ratings” notes are added. e.g. About when operating the IC over the “Absolute Maximum Ratings”, “Operating Temperature” is moved to “Recommended Operating Conditions” from “Absolute Maximum Ratings”. In the “Typical Performance Curves” package power dissipation graph is removed, because it’s same information as Note 2 in “Absolute Maximum Ratings”. “Operational Notes” are updated. Other formats are updated.

© 2010 ROHM Co., Ltd. All rights reserved.

Downloaded from Arrow.com.

Notice

Precaution on using ROHM Products

1. Our Products are designed and manufactured for application in ordinary electronic equipment (such as AV equipment, OA equipment, telecommunication equipment, home electronic appliances, amusement equipment, etc.). If you intend to use our Products in devices requiring extremely high reliability (such as medical equipment (Note 1), transport equipment, traffic equipment, aircraft/spacecraft, nuclear power controllers, fuel controllers, car equipment including car accessories, safety devices, etc.) and whose malfunction or failure may cause loss of human life, bodily injury or serious damage to property ("Specific Applications"), please consult with the ROHM sales representative in advance. Unless otherwise agreed in writing by ROHM in advance, ROHM shall not be in any way responsible or liable for any damages, expenses or losses incurred by you or third parties arising from the use of any ROHM's Products for Specific Applications.

(Note1) Medical Equipment Classification of the Specific Applications

JAPAN	USA	EU	CHINA
CLASSⅢ	CLASSⅢ	CLASSⅡb	CLASSⅢ
CLASSⅣ		CLASSⅢ	

2. ROHM designs and manufactures its Products subject to strict quality control system. However, semiconductor products can fail or malfunction at a certain rate. Please be sure to implement, at your own responsibilities, adequate safety measures including but not limited to fail-safe design against the physical injury, damage to any property, which a failure or malfunction of our Products may cause. The following are examples of safety measures:
   [a] Installation of protection circuits or other protective devices to improve system safety
   [b] Installation of redundant circuits to reduce the impact of single or multiple circuit failure

3. Our Products are designed and manufactured for use under standard conditions and not under any special or extraordinary environments or conditions, as exemplified below. Accordingly, ROHM shall not be in any way responsible or liable for any damages, expenses or losses arising from the use of any ROHM's Products under any special or extraordinary environments or conditions. If you intend to use our Products under any special or extraordinary environments or conditions (as exemplified below), your independent verification and confirmation of product performance, reliability, etc, prior to use, must be necessary:
   [a] Use of our Products in any types of liquid, including water, oils, chemicals, and organic solvents
   [b] Use of our Products outdoors or in places where the Products are exposed to direct sunlight or dust
   [c] Use of our Products in places where the Products are exposed to sea wind or corrosive gases, including Cl_2, H_2S, NH_3, SO_2, and NO_2
   [d] Use of our Products in places where the Products are exposed to static electricity or electromagnetic waves
   [e] Use of our Products in proximity to heat-producing components, plastic cords, or other flammable items
   [f] Sealing or coating our Products with resin or other coating materials
   [g] Use of our Products without cleaning residue of flux (Exclude cases where no-clean type fluxes is used. However, recommend sufficiently about the residue.) ; or Washing our Products by using water or water-soluble cleaning agents for cleaning residue after soldering
   [h] Use of the Products in places subject to dew condensation

4. The Products are not subject to radiation-proof design.

5. Please verify and confirm characteristics of the final or mounted products in using the Products.

6. In particular, if a transient load (a large amount of load applied in a short period of time, such as pulse, is applied, confirmation of performance characteristics after on-board mounting is strongly recommended. Avoid applying power exceeding normal rated power; exceeding the power rating under steady-state loading condition may negatively affect product performance and reliability.

7. De-rate Power Dissipation depending on ambient temperature. When used in sealed area, confirm that it is the use in the range that does not exceed the maximum junction temperature.

8. Confirm that operation temperature is within the specified range described in the product specification.

9. ROHM shall not be in any way responsible or liable for failure induced under deviant condition from what is defined in this document.

Precaution for Mounting / Circuit board design

1. When a highly active halogenous (chlorine, bromine, etc.) flux is used, the residue of flux may negatively affect product performance and reliability.

2. In principle, the reflow soldering method must be used on a surface-mount products, the flow soldering method must be used on a through hole mount products. If the flow soldering method is preferred on a surface-mount products, please consult with the ROHM representative in advance.

For details, please refer to ROHM Mounting specification

© 2015 ROHM Co., Ltd. All rights reserved.

Downloaded from Arrow.com.

Precautions Regarding Application Examples and External Circuits

1. If change is made to the constant of an external circuit, please allow a sufficient margin considering variations of the characteristics of the Products and external components, including transient characteristics, as well as static characteristics.

2. You agree that application notes, reference designs, and associated data and information contained in this document are presented only as guidance for Products use. Therefore, in case you use such information, you are solely responsible for it and you must exercise your own independent verification and judgment in the use of such information contained in this document. ROHM shall not be in any way responsible or liable for any damages, expenses or losses incurred by you or third parties arising from the use of such information.

Precaution for Electrostatic

This Product is electrostatic sensitive product, which may be damaged due to electrostatic discharge. Please take proper caution in your manufacturing process and storage so that voltage exceeding the Products maximum rating will not be applied to Products. Please take special care under dry condition (e.g. Grounding of human body / equipment / solder iron, isolation from charged objects, setting of Ionizer, friction prevention and temperature / humidity control).

Precaution for Storage / Transportation

1. Product performance and soldered connections may deteriorate if the Products are stored in the places where:
   [a] the Products are exposed to sea winds or corrosive gases, including Cl_2, H_2S, NH_3, SO_2, and NO_2
   [b] the temperature or humidity exceeds those recommended by ROHM
   [c] the Products are exposed to direct sunshine or condensation
   [d] the Products are exposed to high Electrostatic

2. Even under ROHM recommended storage condition, solderability of products out of recommended storage time period may be degraded. It is strongly recommended to confirm solderability before using Products of which storage time is exceeding the recommended storage time period.

3. Store / transport cartons in the correct direction, which is indicated on a carton with a symbol. Otherwise bent leads may occur due to excessive stress applied when dropping of a carton.

4. Use Products within the specified time after opening a humidity barrier bag. Baking is required before using Products of which storage time is exceeding the recommended storage time period.

Precaution for Product Label

A two-dimensional barcode printed on ROHM Products label is for ROHM's internal use only.

Precaution for Disposition

When disposing Products please dispose them properly using an authorized industry waste company.

Precaution for Foreign Exchange and Foreign Trade act

Since concerned goods might be fallen under listed items of export control prescribed by Foreign exchange and Foreign trade act, please consult with ROHM in case of export.

Precaution Regarding Intellectual Property Rights

1. All information and data including but not limited to application example contained in this document is for reference only. ROHM does not warrant that foregoing information or data will not infringe any intellectual property rights or any other rights of any third party regarding such information or data.

2. ROHM shall not have any obligations where the claims, actions or demands arising from the combination of the Products with other articles such as components, circuits, systems or external equipment (including software).

3. No license, expressly or implied, is granted hereby under any intellectual property rights or other rights of ROHM or any third parties with respect to the Products or the information contained in this document. Provided, however, that ROHM will not assert its intellectual property rights or other rights against you or your customers to the extent necessary to manufacture or sell products containing the Products, subject to the terms and conditions herein.

Other Precaution

1. This document may not be reprinted or reproduced, in whole or in part, without prior written consent of ROHM.

2. The Products may not be disassembled, converted, modified, reproduced or otherwise changed without prior written consent of ROHM.

3. In no event shall you use in any way whatsoever the Products and the related technical information contained in the Products or this document for any military purposes, including but not limited to, the development of mass-destruction weapons.

4. The proper names of companies or products described in this document are trademarks or registered trademarks of ROHM, its affiliated companies or third parties.

© 2015 ROHM Co., Ltd. All rights reserved.

Downloaded from Arrow.com.

General Precaution

1. Before you use our Products, you are requested to carefully read this document and fully understand its contents. ROHM shall not be in any way responsible or liable for failure, malfunction or accident arising from the use of any ROHM's Products against warning, caution or note contained in this document.

2. All information contained in this document is current as of the issuing date and subject to change without any prior notice. Before purchasing or using ROHM's Products, please confirm the latest information with a ROHM sales representative.

3. The information contained in this document is provided on an "as is" basis and ROHM does not warrant that all information contained in this document is accurate and/or error-free. ROHM shall not be in any way responsible or liable for any damages, expenses or losses incurred by you or third parties resulting from inaccuracy or errors of or concerning such information.

© 2015 ROHM Co., Ltd. All rights reserved.

Downloaded from Arrow.com.