Data Sheet | Item Number: 750-333

Fieldbus Coupler PROFIBUS DP; 2nd Generation; 12 MBd

https://www.wago.com/750-333

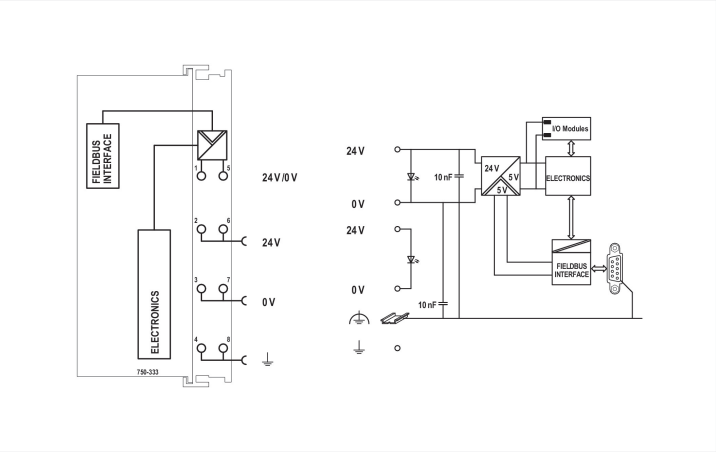

Color: light gray

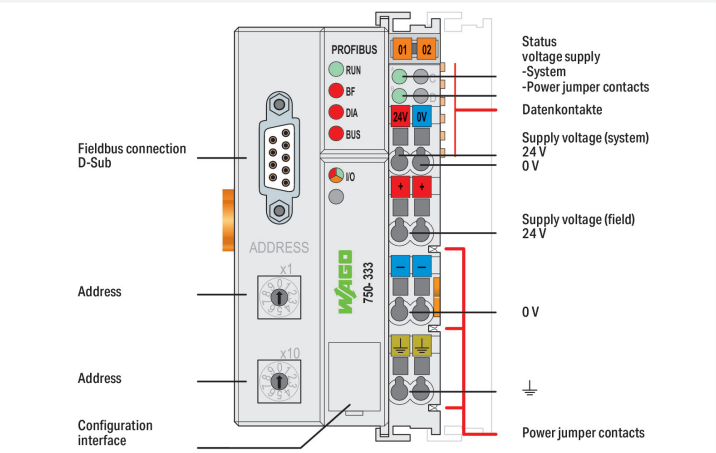

The 750-333 Fieldbus Coupler maps the peripheral data of all the WAGO I/O System's I/O modules on PROFIBUS DP.
When initializing, the coupler determines the node's module structure and creates the process image of all inputs and outputs. Modules with a bit width smaller than eight are grouped in one byte for address space optimization.
It is furthermore possible to deactivate I/O modules and to modify the image of the node according to the connected signals without having to modify the existing control application.
The diagnostic concept is based on ID- and channel-related diagnostics according to EN 50170. This does away with the need for programming modules to evaluate manufacturer-specific diagnostic data.

Notes

Note	**Note: Configuration files required (GSD)!**

Downloaded from Arrow.com.

Technical data

Communications	PROFIBUS
Number of fieldbus nodes on master (max.)	96
Number of I/O points	6000
Transmission rate	9.6 kBd ... 12 MBd
Bus segment length (max.)	1200 m
Transmission medium (communication/fieldbus)	Cu cable per EN 50170
Transmission time	typ. 1 ms (10 couplers; each 32 digital I/O and 12 Mbaud) max. 3.3 ms
Number of modules per node (max.)	63
Number of modules without a bus extension (max.)	63
Input and output process image (fieldbus) max.	244 bytes/244 bytes
Supply voltage (system)	24 VDC (-25 ... +30 %); via pluggable connector (CAGE CLAMP® connection)
Current consumption (system supply)	200 mA
Total current (system supply)	1800 mA
Supply voltage (field)	24 VDC (-25 ... +30 %); via power jumper contacts
Input current (typ.) at nominal load (24 V)	500 mA
Power supply efficiency (typ.) at nominal load (24 V)	87 %
Number of outgoing power jumper contacts	3
Current carrying capacity (power jumper contacts)	10 A
Standard	EN 50170

Safety and protection

Protection type	IP20
Pollution degree	2 per IEC 61131-2
Isolation	500 VDC system/field

Connection Data

Connection technology: communication/fieldbus	PROFIBUS: 1 x D-sub 9 socket
Connection technology: field supply	6 x CAGE CLAMP®
Connection technology: system supply	2 x CAGE CLAMP®
Connectable conductor materials	Copper
Connection type	System/field supply
Solid conductor	0.08 ... 2.5 mm² / 28 ... 14 AWG
Fine-stranded conductor	0.08 ... 2.5 mm² / 28 ... 14 AWG
Strip length	8 ... 9 mm / 0.31 ... 0.35 inches
Connection technology: device configuration	1 x Male connector; 4-pole

Physical data

Width	50.5 mm / 1.988 inches
Height	100 mm / 3.937 inches
Depth	71.1 mm / 2.799 inches
Depth from upper-edge of DIN-rail	63.9 mm / 2.516 inches

 Continued on next page
Downloaded from Arrow.com.

Mechanical data

Mounting type	DIN-35 rail

Material data

Color	light gray
Housing material	Polycarbonate; polyamide 6.6
Fire load	2.801 MJ
Weight	183.1 g
Conformity marking	CE

Environmental requirements

Ambient temperature (operation)	0 … +55 °C
Ambient temperature (storage)	-25 … +85 °C
Operating altitude	0 … 2000 m / 0 … 6562 ft
Mounting position	Horizontal left, horizontal right, horizontal top, horizontal bottom, vertical top and vertical bottom
Relative humidity (without condensation)	95 %
Vibration resistance	4g per IEC 60068-2-6
Shock resistance	15g per IEC 60068-2-27
EMC immunity to interference	per EN 61000-6-2, marine applications
EMC emission of interference	per EN 61000-6-4, marine applications
Exposure to pollutants	per IEC 60068-2-42 and IEC 60068-2-43
Permissible H_2S contaminant concentration at a relative humidity 75 %	10 ppm
Permissible SO_2 contaminant concentration at a relative humidity 75 %	25 ppm

Data Act

Pre-contractual Information	Data-Act-750-Series-Coupler

Commercial data

Product Group	15 (I/O System)
PU (SPU)	1 pcs
Packaging type	Box
Country of origin	DE
GTIN	4045454526856
Customs tariff number	85176200000

Product Classification

UNSPSC	32151705
eCl@ss 10.0	27-24-26-07
eCl@ss 9.0	27-24-26-07
ETIM 9.0	EC001603
ETIM 10.0	EC001603
ECCN	NO US CLASSIFICATION

Downloaded from Arrow.com.

Environmental Product Compliance

CAS-No.	12060-00-3 1303-86-2 1317-36-8 25550-51-0 7439-92-1 79-94-7
REACH Candidate List Substance	2,2',6,6'-tetrabromo-4,4'-isopropylidenediphenol 4-Methyl-1,2-cyclohexanedicarboxylic anhydride Diboron trioxide Lead Lead monoxide Lead titanium oxide (PbTiO3)
RoHS Compliance Status	Compliant,With Exemption
RoHS Exemption	6(c) 7(a) 7(c)-I 7(c)-II
SCIP notification number (Bulgaria)	ef321005-d1ab-4abd-a70b-38d1a013750b
SCIP notification number (Czech Republic)	c90e9500-dbd7-434f-b04b-ce7d55b4001d

Approvals / Certificates

General approvals

Approval	Standard	Certificate Name
EAC GZO Almaty Standart	TP TC 020/2011	EAC CoC 03083
KC National Radio Research Agency	Article 58-2, Clause 3	MSIP-REM-W43-FBC750
UL Underwriters Laboratories Inc. (ORDINARY LOCATIONS)	UL 508	E175199

Declarations of conformity and manufacturer's declarations

Approval	Standard	Certificate Name
EU-Declaration of Conformity WAGO GmbH & Co. KG	-	-
UK-Declaration of Conformity WAGO GmbH & Co. KG	-	-

Approvals for marine applications

Approval	Standard	Certificate Name
ABS American Bureau of Shipping	-	25-0415412
BSH Bundesamt fuer Seeschiffahrt und Hydrographie	-	1104
BV Bureau Veritas S.A.	-	13453/E0 BV
DNV DNV GL SE	DNV-CG-0339,Aug.2021	TAA0000194
KR Korean Register of Shipping	-	KR HMB05880-AC001
LR Lloyds Register EMEA	-	LR22180952TA
PRS Polski Rejestr Statków	-	TE/1101/880590/23
RINA RINA Germany GmbH	-	ELE343521XG001

Approvals for hazardous areas

Approval	Standard	Certificate Name
ATEX TUEV Nord Cert GmbH	EN 60079-0	TUEV14ATEX148929X (II 3 G Ex ec IIC T4 Gc)
IECEx TUEV Nord Cert GmbH	IEC 60079-0	IECEx TUN 14.0035 X (Ex ec IIC T4 Gc)
INMETRO TÜV Rheinland do Brasil Ltda.	IEC 60079-0	TÜV 12.1297 X
KTL Korea Testing Laboratory	KOSHA Article 34, IEC60079-0	20-KA4BO-0642X
UKEx WAGO GmbH & Co. KG	EN 60079-0	UKCA_WAGO22UKEX003X_ec
UL Underwriters Laboratories Inc. (HAZARDOUS LOCATIONS)	UL 121201	E198726

Downloaded from Arrow.com.

Downloads

Environmental Product Compliance

Compliance Search
Environmental Product Compliance 750-333

Documentation

Manual

Product Manual PROFIBUS DP/ V1 Fieldbus Coupler	V 1.3.1 10.06.2024	pdf 7569.93 KB	
System Manual Series 750/753			

System Description

750/753 Series I/O-System – General Product Information	pdf 953.35 KB	
Overview on WAGO-I/O-SYSTEM 750 approvals	pdf 770.48 KB	

Bid Text

750-333	19.02.2019	xml 6.03 KB	
750-333	21.07.2017	doc 28.50 KB	

Instruction Leaflet

CCC Ex (Additional information)	26.04.2023	pdf 159.76 KB	

Application Notes

Application note SIEMENS

PROFIBUS DP & PROFINET IO Diagnose für Siemens CPU 1200 & 1500 (a100211)	2.1.0 03.12.2019	zip 7307.38 KB	
PROFIBUS DP & PROFINET IO Diagnose für Siemens CPU 300 & 400 (a100210)	2.0.0 07.10.2015	zip 3948.40 KB	
Using iPar-Server option with WAGO PROFIsafe modules (a114802)	V 14.1 07.02.2023	zip 130043.55 KB	

CAD/CAE-Data

CAD data

2D/3D Models 750-333

CAE data

EPLAN Data Portal 750-333
WSCAD Universe 750-333
ZUKEN Portal 750-333

Downloaded from Arrow.com.

Runtime Software

Firmware			
0750-0333, Feldbuskoppler PROFIBUS DP	V 25 07.07.2025	zip 422.32 KB	

Device Files

Device Driver			
WAGO USB Service Kabel Treiber / Serie 750 und 857	6.5.3.0 10.09.2014	zip 4721.96 KB	

Libraries

Device Description File			
750-910; GSD files for PROFIBUS / 750, 752, 755, 758 and 767 Series	6.8 15.01.2023	zip 5322.44 KB	

1 Compatible Products

1.1 Optional Accessories

1.1.1 Cables and connectors

1.1.1.1 Connector plug

Item No.: 750-960
Fieldbus Connector PROFIBUS; with D-sub male connector; 9-pole

1.1.2 Communication

1.1.2.1 Communication cable

Item No.: 750-923
Configuration cable; USB connector; Length: 2.5 m

Item No.: 750-923/000-001
Configuration cable; USB connector; Length: 5 m

Downloaded from Arrow.com.

1.1.3 DIN-rail

1.1.3.1 Mounting accessories

Item No.: 210-196
Aluminum carrier rail; 35 x 8.2 mm; 1.6 mm thick; 2 m long; unslotted; similar to EN 60715; silver-colored

Item No.: 210-198
Copper carrier rail; 35 x 15 mm; 2.3 mm thick; 2 m long; unslotted; according to EN 60715; copper-colored

Item No.: 210-197
Steel carrier rail; 35 x 15 mm; 1.5 mm thick; 2 m long; slotted; similar to EN 60715; silver-colored

Item No.: 210-114
Steel carrier rail; 35 x 15 mm; 1.5 mm thick; 2 m long; unslotted; similar to EN 60715; silver-colored

Item No.: 210-118
Steel carrier rail; 35 x 15 mm; 2.3 mm thick; 2 m long; unslotted; according to EN 60715; silver-colored

Item No.: 210-112
Steel carrier rail; 35 x 7.5 mm; 1 mm thick; 2 m long; slotted; according to EN 60715; "Hole width 25 mm; silver-colored

Item No.: 210-113
Steel carrier rail; 35 x 7.5 mm; 1 mm thick; 2 m long; unslotted; according to EN 60715; silver-colored

1.1.4 Marking

1.1.4.1 Group marker carrier

Item No.: 750-106
Group marker carrier

1.1.4.2 Marker

Item No.: 750-100
Marker card; as a DIN A4 sheet; plain

Item No.: 2009-145/000-006
Mini-WSB Inline; for Smart Printer; 1700 pieces on roll; stretchable 5 - 5.2 mm; plain; snap-on type; blue

Item No.: 2009-145/000-007
Mini-WSB Inline; for Smart Printer; 1700 pieces on roll; stretchable 5 - 5.2 mm; plain; snap-on type; gray

Item No.: 2009-145/000-023
Mini-WSB Inline; for Smart Printer; 1700 pieces on roll; stretchable 5 - 5.2 mm; plain; snap-on type; green

Item No.: 2009-145/000-012
Mini-WSB Inline; for Smart Printer; 1700 pieces on roll; stretchable 5 - 5.2 mm; plain; snap-on type; orange

Item No.: 2009-145/000-005
Mini-WSB Inline; for Smart Printer; 1700 pieces on roll; stretchable 5 - 5.2 mm; plain; snap-on type; red

Item No.: 2009-145/000-024
Mini-WSB Inline; for Smart Printer; 1700 pieces on roll; stretchable 5 - 5.2 mm; plain; snap-on type; violet

Item No.: 2009-145
Mini-WSB Inline; for Smart Printer; 1700 pieces on roll; stretchable 5 - 5.2 mm; plain; snap-on type; white

Item No.: 2009-145/000-002
Mini-WSB Inline; for Smart Printer; 1700 pieces on roll; stretchable 5 - 5.2 mm; plain; snap-on type; yellow

Item No.: 248-501/000-006
Mini-WSB marking card; as card; not stretchable; plain; snap-on type; blue

Item No.: 248-501/000-007
Mini-WSB marking card; as card; not stretchable; plain; snap-on type; gray

Item No.: 248-501/000-023
Mini-WSB marking card; as card; not stretchable; plain; snap-on type; green

Item No.: 248-501/000-017
Mini-WSB marking card; as card; not stretchable; plain; snap-on type; light green

Item No.: 248-501/000-012
Mini-WSB marking card; as card; not stretchable; plain; snap-on type; orange

Item No.: 248-501/000-005
Mini-WSB marking card; as card; not stretchable; plain; snap-on type; red

Item No.: 248-501/000-024
Mini-WSB marking card; as card; not stretchable; plain; snap-on type; violet

Item No.: 248-501
Mini-WSB marking card; as card; not stretchable; plain; snap-on type; white

Item No.: 248-501/000-002
Mini-WSB marking card; as card; not stretchable; plain; snap-on type; yellow

Downloaded from Arrow.com.

1.1.4.3 Marker carrier

Item No.: 750-103
Group marker carrier

1.1.5 Shield termination

1.1.5.1 Shield clamping saddles

Item No.: 790-108
Shield clamping saddle; 11 mm wide; diameter of compatible conductor; 3 … 8 mm

Item No.: 790-208
Shield clamping saddle; 12.4 mm wide; 3 … 8 mm

Item No.: 790-116
Shield clamping saddle; 19 mm wide; diameter of compatible conductor; 7 … 16 mm

Item No.: 790-216
Shield clamping saddle; 21.8 mm wide; 6 … 16 mm

Item No.: 790-124
Shield clamping saddle; 27 mm wide; diameter of compatible conductor; 6 … 24 mm

Item No.: 790-220
Shield clamping saddle; 30 mm wide; 6 … 20 mm

Item No.: 790-140
Shield clamping saddle; diameter of compatible conductor

1.1.6 System enclosure

1.1.6.1 System enclosure

Item No.: 850-825
IP65 enclosure; Aluminium (RAL 7032); WxHxD (160x100x160 mm); 9 x M12, 4 x M20

Item No.: 850-826
IP65 enclosure; Aluminium (RAL 7032); WxHxD (240x100x160 mm); 4 x M20, 4 x M16, 14 x M12 cable grip

Item No.: 850-827
IP65 enclosure; Aluminium (RAL 7032); WxHxD (320x100x160 mm); 4 x M20, 8 x M16, 17 x M12 cable grip

Item No.: 850-828
IP65 enclosure; Aluminium (RAL 7032); WxHxD (480x100x160 mm); 4 x M20, 10 x M16, 35 x M12 cable grip

Item No.: 850-826/002-000
IP65 enclosure; Aluminium (RAL 7035); WxHxD (240x100x160 mm); 4 x M20, 4 x M16, 14 x M12 cable grip

Item No.: 850-827/002-000
IP65 enclosure; Aluminium (RAL 7035); WxHxD (320x100x160 mm); 4 x M20, 8 x M16, 17 x M12 cable grip

Item No.: 850-828/002-000
IP65 enclosure; Aluminium (RAL 7035); WxHxD (480x100x160 mm); 4 x M20, 10 x M16, 35 x M12 cable grip

Item No.: 850-834
IP65 enclosure; Polyester (RAL 7032); WxHxD (164x100x164 mm); 9 x M12, 4 x M20

Item No.: 850-835
IP65 enclosure; Polyester (RAL 7032); WxHxD (244x100x164 mm); 4 x M20, 4 x M16, 14 x M12 cable grip

Item No.: 850-836
IP65 enclosure; Polyester (RAL 7032); WxHxD (324x100x164 mm); 4 x M20, 8 x M16, 17 x M12 cable grip

Item No.: 850-814/002-000
IP65 enclosure; Sheet steel (RAL 7035); WxHxD (200x120x200 mm); without flange plate

Item No.: 850-815/002-000
IP65 enclosure; Sheet steel (RAL 7035); WxHxD (300x120x200 mm); without flange plate

Item No.: 850-816/002-000
IP65 enclosure; Sheet steel (RAL 7035); WxHxD (400x120x200 mm); without flange plate

Item No.: 850-817/002-000
IP65 enclosure; Sheet steel (RAL 7035); WxHxD (600x120x200 mm); without flange plate

Downloaded from Arrow.com.