THIS DRAWING IS UNPUBLISHED. RELEASED FOR PUBLICATION 20
© COPYRIGHT 2011 BY Tyco Electronics Japan G.K. ALL RIGHTS RESERVED.

REVISIONS 変更

P	LTR	DESCRIPTION	DATE	DWN	APVD
	A	RELEASED	15DEC15	K.S	T.K

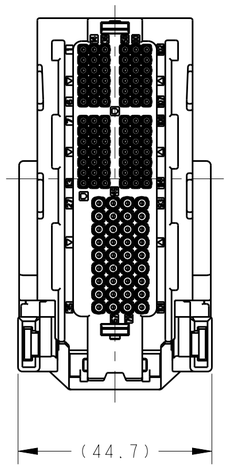

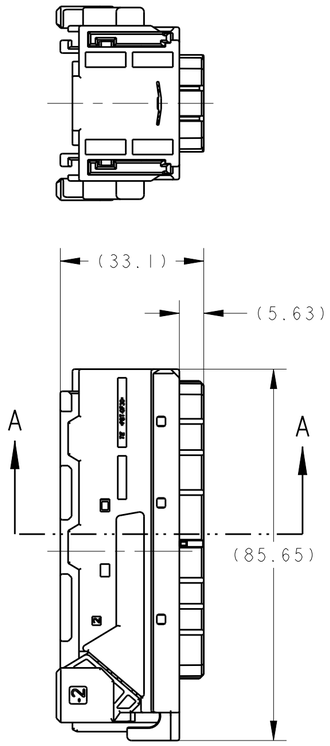

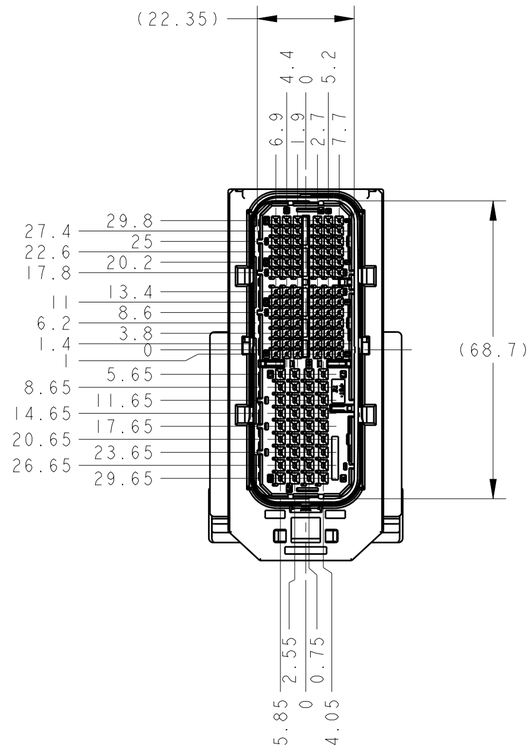

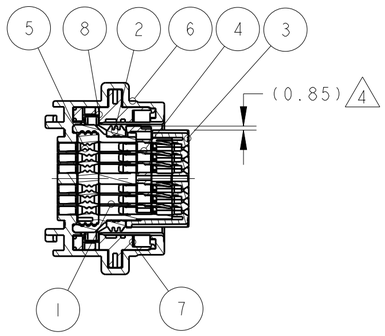

A-A

1. PART NUMBER OF CAP HOUSING TO BE MATED: SEE TABLE-1
2. APPLIED TERMINAL: SEE TABLE-2
3. HANDLING OF THIS PART SHOULD FOLLOW INSTRUCTION SHEET NO.408-78102
4. THIS PRODUCT IS SHIPPED WITH RETAINER PRE-LOCKED POSITION
5. LEVER AND WIRE COVER ARE ASSEMBLED BY CUSTOMER
   TE PART NUMBER
   LEVER: 2040113
   WIRE COVER: 2040114

1. 嵌合相手TE品番：TABLE-1参照
2. 適用端子：TABLE-2参照
3. 本製品の取扱は取扱説明書NO.408-78102に従うこと
4. リテーナは仮係止状態で出荷される
5. レバー、ワイヤカバーは顧客にて組み立てられる
   TE品番
   レバー： 2040113
   ワイヤカバー： 2040114

TABLE-1

POS 極数	CAP ASSEMBLY PART NO. キャップ型番
186	2261071

TABLE-2

1.0 CAVITY PLUG	LIGHT GRAY	1981562-1	-
0.5 CAVITY PLUG	NATURAL	1981561-2	-
1.0 TERMINAL	TIN	1554723-1	$0.5mm^2$-$0.85mm^2$
		1939351-1	$0.75mm^2$-$1.25mm^2$
0.50 TERMINAL	TIN	1939349-1	$0.3mm^2$-$0.5mm^2$
SIZE	FINISH	TERMINAL NO. 端子型番	APPLICABLE WIRE RANGE 適用電線

TABLE-3

PAPER BOX ダンボール箱	OUTER 外装	PACKING STYLE 梱包形態		
SOFT TRAY プリスタトレイ	INNER 内装			
1	BLACK	PBT	SLIDER (B) 114POS	8
1	BLACK	PBT	SLIDER (A) 114POS	7
1	BLACK	PBT	OUTER HOUSING 114POS	6
1	BROWN	SILICONE	WIRE SEAL 114POS	5
1	NATURAL	PBT	RETAINER 114POS	4
1	BLACK	PBT	FRONT CAVITY 114POS	3
1	BROWN	SILICONE	SEAL RING 114POS	2
1	BLACK	PBT	PLUG HOUSING 114POS	1
2040105-1	FINISH /COLOR	MATERIAL	NAME	ITEM NO.

THIS DRAWING IS A CONTROLLED DOCUMENT.

DIMENSIONS: 単位: 粍 mm

TOLERANCES UNLESS OTHERWISE SPECIFIED:
一般公差 ±0.3
0 PLC ±
1 PLC ±0.5
2 PLC ±0.13
3 PLC ±0.013
4 PLC ±0.0001
ANGLES ±3°00′

MATERIAL 材料: SEE TABLE-3 -
FINISH 仕上: SEE TABLE-3 -

DWN K.SHIGA 15DEC15
CHK E.SASAKI 15DEC15
APVD T.KOHNO 15DEC15
PRODUCT SPEC 製品規格: 108-140084
APPLICATION SPEC 取付適用規格: 114-5400,-5470
WEIGHT 73.41 g

TE Connectivity

NAME 名称: PLUG ASSEMBLY 114POSITION, 0.50/1.0/2.8 SEALED TYPE 186POS
プラグ アッセンブリ 114極, 0.50/1.0/2.8 防水タイプ 186極

SIZE A2 | CAGE CODE 00779 | DRAWING NO 番号 C-2040105 | RESTRICTED TO -

CUSTOMER DRAWING | SCALE 尺度 1:1 | SHEET 1 OF 1 | REV A

1471-9 (3/13)

Downloaded from Arrow.com.