Data Sheet | Item Number: 281-611

2-conductor fuse terminal block; with pivoting fuse holder; for 5 x 20 mm miniature metric fuse; without blown fuse indication; for DIN-rail 35 x 15 and 35 x 7.5; 4 mm²; CAGE CLAMP®; gray

https://www.wago.com/281-611

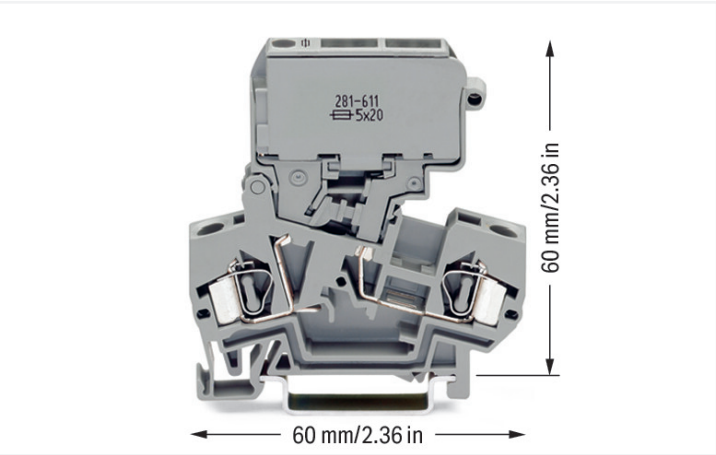

Color: gray

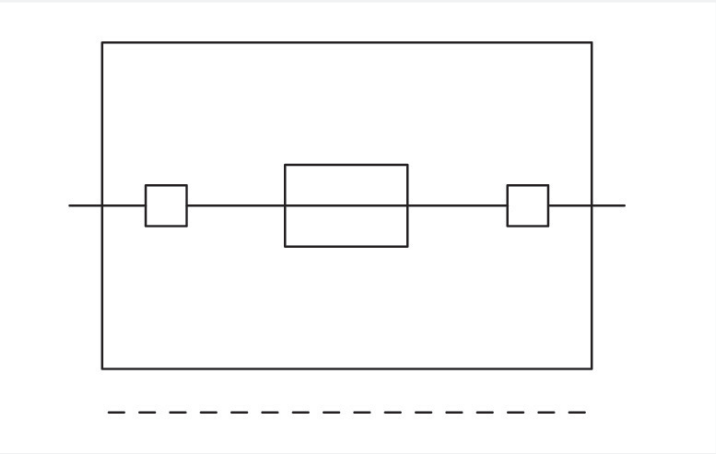

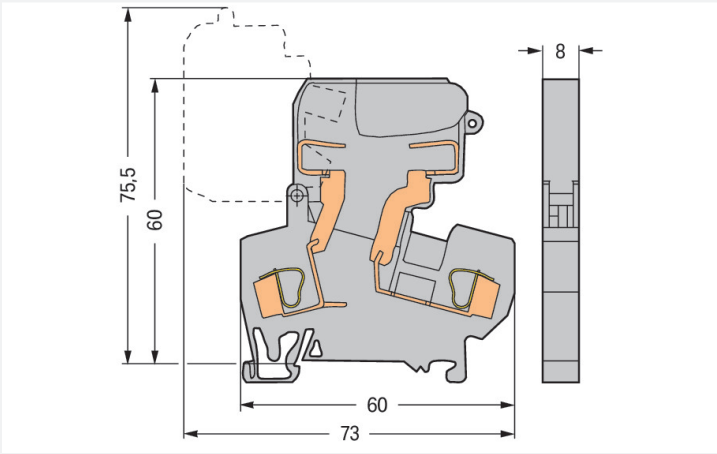

Dimensions in mm
Fused disconnect terminal block with a pivoting fuse holder, for (5 x 20) mm glass cartridge fuse, without blown fuse indication (281-611)

Fuse terminal block, 281 Series, gray

Our fuse terminal block (item number 281-611) is designed for seamless electrical installations. Conductors can only be connected to this fuse terminal block if their strip length is between 9 and 10 mm . Featuring conductor terminals along with CAGE CLAMP®, this connector is highly versatile. Our reliable and maintenance-free CAGE CLAMP® connection makes it easy to connect all conductor types without having to prepare the conductor. For example, you don't need to crimp ferrules. Depending on the conductor type, this fuse terminal block is suitable for conductor cross sections ranging from 0.08 mm² to 4 mm².

Electrical data

Ratings per	IEC/EN 60947-7-3		
Overvoltage category	III	III	II
Pollution degree	3	2	2
Nominal voltage	800 V	-	-
Rated impulse withstand voltage	8 kV	-	-
Rated current	10 A	-	-

Ratings per IEC/EN – Notes	
Ratings (note)	Electrical ratings are given by the fuse.

Downloaded from Arrow.com.

Power Loss

Power loss $P_{loss\,(max.)}$ (note)	When selecting glass cartridge fuses, make sure that the maximum power loss listed below is not exceeded. The power loss is determined according to IEC or EN 60947-7-3/VDE 0611-6 at 23°C. The temperature rise of the terminal block must be checked according to their application and mounting. Higher ambient temperatures represent an additional impact on miniature fuses. Therefore, in such applications, the rated current must be reduced if necessary. More details are available from the manufacturers.
Maximum power loss P_{loss} of fuse insert for overload and short-circuit protection (individual arrangement)	2.5 W
Maximum power loss P_{loss} of fuse insert for overload and short-circuit protection (block arrangement)	1.6 W
Maximum power loss P_{loss} of fuse insert for short-circuit protection (individual arrangement)	4 W
Power loss P_{loss} (max.) of fuse cartridge for short-circuit protection (block arrangement)	4 W

General information

Fuse receptacle	pivoting
Fuse type	Cylindrical fuse; 5 x 20 mm
Wiring direction	Front-entry wiring

Connection Data

Clamping units	2
Total number of potentials	2
Number of levels	1

Connection 1

Connection technology	CAGE CLAMP®
Actuation type	Operating tool
Connectable conductor materials	Copper Aluminum
Connectable conductor materials (note)	**Terminating Aluminum Conductors** WAGO Spring-Clamp Terminal Blocks are suitable for solid aluminum conductors up to 4 mm²/12 AWG if WAGO Aluminum Contact Paste 249-130 is used for termination. Aluminum Contact Paste Advantages: • Automatically destroys the oxide film during clamping. • Prevents fresh oxidation at the clamping point. • Prevents electrolytic corrosion between aluminum and copper conductors (in the same terminal block). • Provides long-term protection against corrosion. Using terminal blocks with CAGE CLAMP® Spring Pressure Connection Technology, **aluminum conductors must first be cleaned with a blade** and then immediately inserted into the clamping units filled with aluminum contact paste. It is also possible to apply WAGO Aluminum Contact Paste **additionally** on the whole surface of the aluminum conductor before termination. Please note that the nominal currents must be adapted to the reduced conductivity of the aluminum conductors:: 2.5 mm² = 16 A 4 mm² = 22 A
Solid conductor	0.08 … 4 mm² / 28 … 12 AWG
Fine-stranded conductor	0.08 … 4 mm² / 28 … 12 AWG
Strip length	9 … 10 mm / 0.35 … 0.39 inches
Wiring direction	Front-entry wiring

 Continued on next page
Downloaded from Arrow.com.

Physical data

Width	8 mm / 0.315 inches
Height	60 mm / 2.362 inches
Depth from upper-edge of DIN-rail	60 mm / 2.362 inches

Mechanical data

Design	angled
Mounting type	DIN-35 rail
Marking level	Center marking

Material data

Note (material data)	Information on material specifications can be found here
Color	gray
Material group	I
Insulation material (main housing)	Polyamide (PA66)
Flammability class per UL94	V0
Fire load	0.285 MJ
Weight	17 g

Environmental requirements

Processing temperature	-35 ... +85 °C
Continuous operating temperature	-60 ... +105 °C

Commercial data

Product Group	1 (Rail Mounted Terminal Blocks)
PU (SPU)	50 pcs
Packaging type	Box
Country of origin	IN
GTIN	4045454614591
Customs tariff number	85369095000

Product Classification

UNSPSC	39121410
eCl@ss 10.0	27-14-11-16
eCl@ss 9.0	27-14-11-16
ETIM 9.0	EC000899
ETIM 10.0	EC000899
ECCN	NO US CLASSIFICATION

Environmental Product Compliance

RoHS Compliance Status	Compliant,No Exemption

Downloaded from Arrow.com.

Approvals / Certificates

General approvals

Approval	Standard	Certificate Name
CSA CSA Group	C22.2	1505034
KEMA/KEUR DEKRA Certification B.V.	EN 60947	NTR NL-7135
KEMA/KEUR DEKRA Certification B.V.	EN 60947	2160584.31
UL Underwriters Laboratories Inc.	UL 1059	20190731-E45172

Declarations of conformity and manufacturer's declarations

Approval	Standard	Certificate Name
EU-Declaration of Conformity WAGO GmbH & Co. KG	-	-

Approvals for marine applications

Approval	Standard	Certificate Name
ABS American Bureau of Shipping	-	24-0152298-PDA

Downloads

Environmental Product Compliance

Compliance Search

Environmental Product Compliance 281-611

Documentation

Bid Text

281-611	19.02.2019	xml 3.44 KB	
281-611	09.03.2017	doc 25.00 KB	

CAD/CAE-Data

CAD data

2D/3D Models 281-611

CAE data

EPLAN Data Portal 281-611

WSCAD Universe 281-611

ZUKEN Portal 281-611

Downloaded from Arrow.com.

1 Compatible Products

1.1 Required Accessories

1.1.1 End plate

1.1.1.1 End plate

Item No.: 281-311
End and intermediate plate; 2.5 mm thick; gray

Item No.: 281-309
End and intermediate plate; 2.5 mm thick; orange

1.2 Optional Accessories

1.2.1 DIN-rail

1.2.1.1 Mounting accessories

Item No.: 210-196
Aluminum carrier rail; 35 x 8.2 mm; 1.6 mm thick; 2 m long; unslotted; similar to EN 60715; silver-colored

Item No.: 210-198
Copper carrier rail; 35 x 15 mm; 2.3 mm thick; 2 m long; unslotted; according to EN 60715; copper-colored

Item No.: 210-508
Steel carrier rail; 35 x 15 mm; 1.5 mm thick; 2 m long; slotted; galvanized; similar to EN 60715; silver-colored

Item No.: 210-197
Steel carrier rail; 35 x 15 mm; 1.5 mm thick; 2 m long; slotted; similar to EN 60715; silver-colored

Item No.: 210-506
Steel carrier rail; 35 x 15 mm; 1.5 mm thick; 2 m long; unslotted; galvanized; similar to EN 60715; silver-colored

Item No.: 210-114
Steel carrier rail; 35 x 15 mm; 1.5 mm thick; 2 m long; unslotted; similar to EN 60715; silver-colored

Item No.: 210-118
Steel carrier rail; 35 x 15 mm; 2.3 mm thick; 2 m long; unslotted; according to EN 60715; silver-colored

Item No.: 210-115
Steel carrier rail; 35 x 7.5 mm; 1 mm thick; 2 m long; slotted; according to EN 60715; "Hole width 18 mm; silver-colored

Item No.: 210-112
Steel carrier rail; 35 x 7.5 mm; 1 mm thick; 2 m long; slotted; according to EN 60715; "Hole width 25 mm; silver-colored

Item No.: 210-504
Steel carrier rail; 35 x 7.5 mm; 1 mm thick; 2 m long; slotted; galvanized; according to EN 60715; silver-colored

Item No.: 210-113
Steel carrier rail; 35 x 7.5 mm; 1 mm thick; 2 m long; unslotted; according to EN 60715; silver-colored

Item No.: 210-505
Steel carrier rail; 35 x 7.5 mm; 1 mm thick; 2 m long; unslotted; galvanized; according to EN 60715; silver-colored

1.2.2 Ferrule

1.2.2.1 Ferrule

Item No.: 216-241
Ferrule; Sleeve for 0.5 mm² / 20 AWG; insulated; electro-tin plated; electrolytic copper; gastight crimped; acc. to DIN 46228, Part 4/09.90; white

Item No.: 216-242
Ferrule; Sleeve for 0.75 mm² / 18 AWG; insulated; electro-tin plated; electrolytic copper; gastight crimped; acc. to DIN 46228, Part 4/09.90; gray

Item No.: 216-243
Ferrule; Sleeve for 1 mm² / AWG 18; insulated; electro-tin plated; electrolytic copper; gastight crimped; acc. to DIN 46228, Part 4/09.90; red

Item No.: 216-244
Ferrule; Sleeve for 1.5 mm² / AWG 16; insulated; electro-tin plated; electrolytic copper; gastight crimped; acc. to DIN 46228, Part 4/09.90; black

Item No.: 216-246
Ferrule; Sleeve for 2.5 mm² / AWG 14; insulated; electro-tin plated; electrolytic copper; gastight crimped; acc. to DIN 46228, Part 4/09.90; blue

Item No.: 216-106
Ferrule; Sleeve for 2.5 mm² / AWG 14; uninsulated; electro-tin plated; silver-colored

Downloaded from Arrow.com.

1.2.3 Installation

1.2.3.1 Cover

Item No.: 709-153
Cover; Type 1; suitable for cover carrier, type 1; 1 m long; transparent

1.2.3.2 Cover carrier

Item No.: 709-167
Cover carrier; Type 1; incl. fixing/retaining screws and knurled nut; suitable for 279 to 282 and 880 Series rail-mounted terminal blocks; suitable for 264 Series miniature rail-mounted terminal blocks; suitable for 270 Series sensor and actuator terminal blocks; gray

1.2.3.3 Mounting accessories

Item No.: 209-106
Mounting carrier; for isolated mounting on DIN 35 rails; gray

Item No.: 249-116
Screwless end stop; 6 mm wide; for DIN-rail 35 x 15 and 35 x 7.5; gray

1.2.4 Jumper

1.2.4.1 Jumper

Item No.: 281-402
Jumper; insulated; gray

Item No.: 210-103
Wire commoning chain; 0.5 mm²; insulated; black

Item No.: 709-110
Wire commoning chain; 2.5 mm²; insulated; black

Item No.: 709-111
Wire commoning chain; 2.5 mm²; insulated; black

Item No.: 709-112
Wire commoning chain; 2.5 mm²; insulated; black

Item No.: 210-123
Wire commoning chain; insulated; blue

1.2.5 Locking system

1.2.5.1 Locking system

Item No.: 210-254
Interlocking link; mechanically locks multiple links; 1 m long; transparent

Downloaded from Arrow.com.

1.2.6 Marking

1.2.6.1 Marker

Item No.: 793-5501/000-006
WMB marking card; as card; for terminal block width 5 - 17.5 mm; stretchable 5 - 5.2 mm; plain; snap-on type; blue

Item No.: 793-5501/000-007
WMB marking card; as card; for terminal block width 5 - 17.5 mm; stretchable 5 - 5.2 mm; plain; snap-on type; gray

Item No.: 793-5501/000-023
WMB marking card; as card; for terminal block width 5 - 17.5 mm; stretchable 5 - 5.2 mm; plain; snap-on type; green

Item No.: 793-5501/000-017
WMB marking card; as card; for terminal block width 5 - 17.5 mm; stretchable 5 - 5.2 mm; plain; snap-on type; light green

Item No.: 793-5501/000-012
WMB marking card; as card; for terminal block width 5 - 17.5 mm; stretchable 5 - 5.2 mm; plain; snap-on type; orange

Item No.: 793-5501/000-005
WMB marking card; as card; for terminal block width 5 - 17.5 mm; stretchable 5 - 5.2 mm; plain; snap-on type; red

Item No.: 793-5501/000-024
WMB marking card; as card; for terminal block width 5 - 17.5 mm; stretchable 5 - 5.2 mm; plain; snap-on type; violet

Item No.: 793-5501
WMB marking card; as card; for terminal block width 5 - 17.5 mm; stretchable 5 - 5.2 mm; plain; snap-on type; white

Item No.: 793-5501/000-002
WMB marking card; as card; for terminal block width 5 - 17.5 mm; stretchable 5 - 5.2 mm; plain; snap-on type; yellow

Item No.: 793-501/000-006
WMB marking card; as card; not stretchable; plain; snap-on type; blue

Item No.: 793-501/000-007
WMB marking card; as card; not stretchable; plain; snap-on type; gray

Item No.: 793-501/000-023
WMB marking card; as card; not stretchable; plain; snap-on type; green

Item No.: 793-501/000-017
WMB marking card; as card; not stretchable; plain; snap-on type; light green

Item No.: 793-501/000-012
WMB marking card; as card; not stretchable; plain; snap-on type; orange

Item No.: 793-501/000-005
WMB marking card; as card; not stretchable; plain; snap-on type; red

Item No.: 793-501/000-024
WMB marking card; as card; not stretchable; plain; snap-on type; violet

Item No.: 793-501
WMB marking card; as card; not stretchable; plain; snap-on type; white

Item No.: 793-501/000-002
WMB marking card; as card; not stretchable; plain; snap-on type; yellow

Item No.: 2009-115/000-006
WMB-Inline; for Smart Printer; 1500 pieces on roll; stretchable 5 - 5.2 mm; plain; snap-on type; blue

Item No.: 2009-115/000-007
WMB-Inline; for Smart Printer; 1500 pieces on roll; stretchable 5 - 5.2 mm; plain; snap-on type; gray

Item No.: 2009-115/000-023
WMB-Inline; for Smart Printer; 1500 pieces on roll; stretchable 5 - 5.2 mm; plain; snap-on type; green

Item No.: 2009-115/000-017
WMB-Inline; for Smart Printer; 1500 pieces on roll; stretchable 5 - 5.2 mm; plain; snap-on type; light green

Item No.: 2009-115/000-012
WMB-Inline; for Smart Printer; 1500 pieces on roll; stretchable 5 - 5.2 mm; plain; snap-on type; orange

Item No.: 2009-115/000-024
WMB-Inline; for Smart Printer; 1500 pieces on roll; stretchable 5 - 5.2 mm; plain; snap-on type; violet

Item No.: 2009-115
WMB-Inline; for Smart Printer; 1500 pieces on roll; stretchable 5 - 5.2 mm; plain; snap-on type; white

Item No.: 2009-115/000-002
WMB-Inline; for Smart Printer; 1500 pieces on roll; stretchable 5 - 5.2 mm; plain; snap-on type; yellow

1.2.7 Push-in type wire jumper

1.2.7.1 Jumper

Item No.: 249-126
Push-in type wire jumper; 0.75 mm²; insulated; 110 mm long; black

Item No.: 249-123
Push-in type wire jumper; 0.75 mm²; insulated; 180 mm long; black

Item No.: 249-127
Push-in type wire jumper; 0.75 mm²; insulated; 250 mm long; black

Item No.: 249-125
Push-in type wire jumper; insulated; 60 mm long; black

Continued on next page
Downloaded from Arrow.com.

1.2.8 Test and measurement

1.2.8.1 Testing accessories

Item No.: 249-147
B-type test plug module; modular; 2,50 mm²; gray

Item No.: 280-404
Test plug adapter; 5 mm wide; for test plug (2.3 mm Ø); suitable for 1.5 mm² - 4 mm² tbs; gray

Item No.: 281-407
Test plug; 6 mm wide; Nominal current 24 A; for 0.08 mm² - 2.5 mm²; gray

1.2.9 Tool

1.2.9.1 Operating tool

Item No.: 210-658
Operating tool; Blade: 3.5 x 0.5 mm; with a partially insulated shaft; angled; short; multi-coloured

Item No.: 210-720
Operating tool; Blade: 3.5 x 0.5 mm; with a partially insulated shaft; multicoloured

Item No.: 210-657
Operating tool; Blade: 3.5 x 0.5 mm; with a partially insulated shaft; short; multicoloured

Installation Notes

Conductor termination

CAGE CLAMP® connection
Inserting a conductor.
With ferruled conductors, it is necessary to use a terminal block one size smaller than the conductor's nominal cross-section.

Commoning

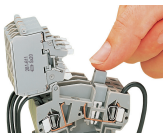

Commoning
Distributing current to several fuse-protected circuits via insulated push-in type jumpers.

Testing

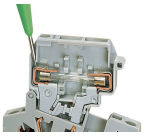

Voltage test, either at input or output with fuse holder in closed position (live)

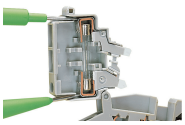

Through test with fuse holder in open position (no voltage)

Voltage test at input in the test slot of the current bar

Testing voltage at the output via separate test slot.

Downloaded from Arrow.com.

Testing

Measuring current between jumper slot and separate test slot.

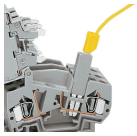

Testing voltage (input side) via test plug adapter (280-404, shown) or test plug (281-407).

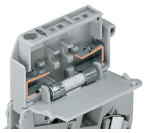

5 x 20 mm, 5 x 25 mm and ¼" x 1" fuse holders are fitted with stops on the inside of the cover.

Security

Touch-proof protection in all positions of the fuse holder

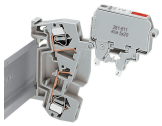

Fuse holder will remain safely locked open in vertical assemblies.

Locking system

Ganging several fuse holders with an interlocking link (example shows 8 mm wide terminal blocks).

Application

Fuse replacement:
Before replacing a fuse, pivot the fuse holder into the locked open position.

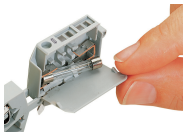

Fuse replacement:
One end of the fuse is automatically ejected from the holder when opening the cover.

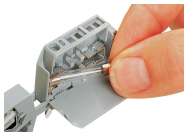

Fuse replacement:
Easily removing a fuse by hand.

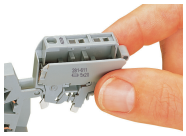

Fuse replacement:
Insert a new fuse and snap the cover closed.

Downloaded from Arrow.com.

Application

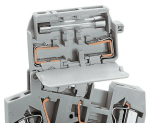

Storing a spare fuse (fuse holder without blown fuse indication) for the types of fuses 5 x 20 mm, 5 x 25 mm und 5 x 30 mm.

Fused disconnect or disconnect terminal blocks with a width of 8 mm can be assembled adjacently. At the end of an assembly, or if there is **no** adjacent fused disconnect or disconnect terminal block, an end or intermediate plate must be used.

Marking

All fuse holders are printed with correct fuse size.

Each fuse holder features two marker slots for custom WMB Multi markers (example shows 8 mm wide terminal blocks).

Downloaded from Arrow.com.