Alle Rechte vorbehalten/ *All rights reserved*

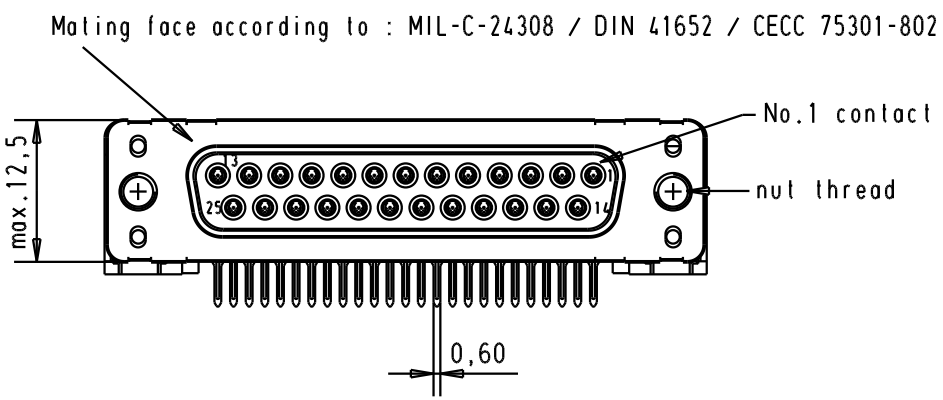

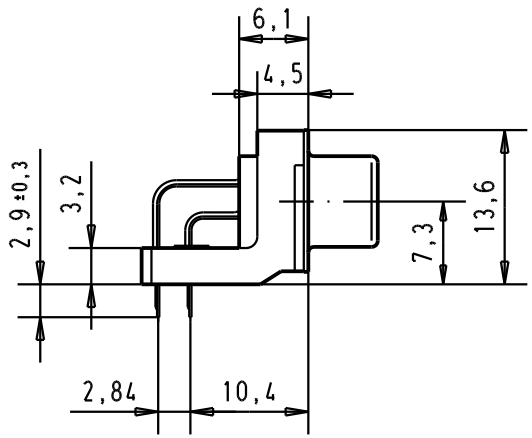

Printed board layout
component side

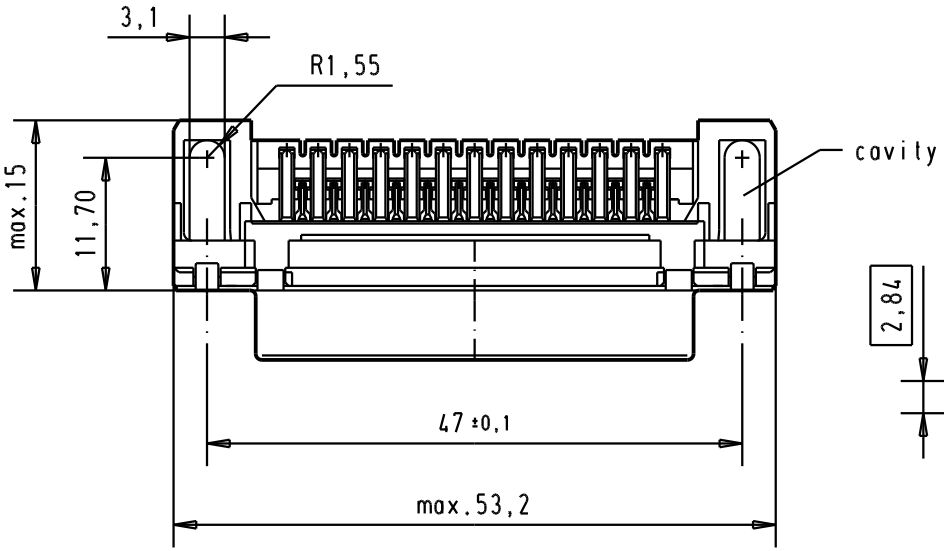

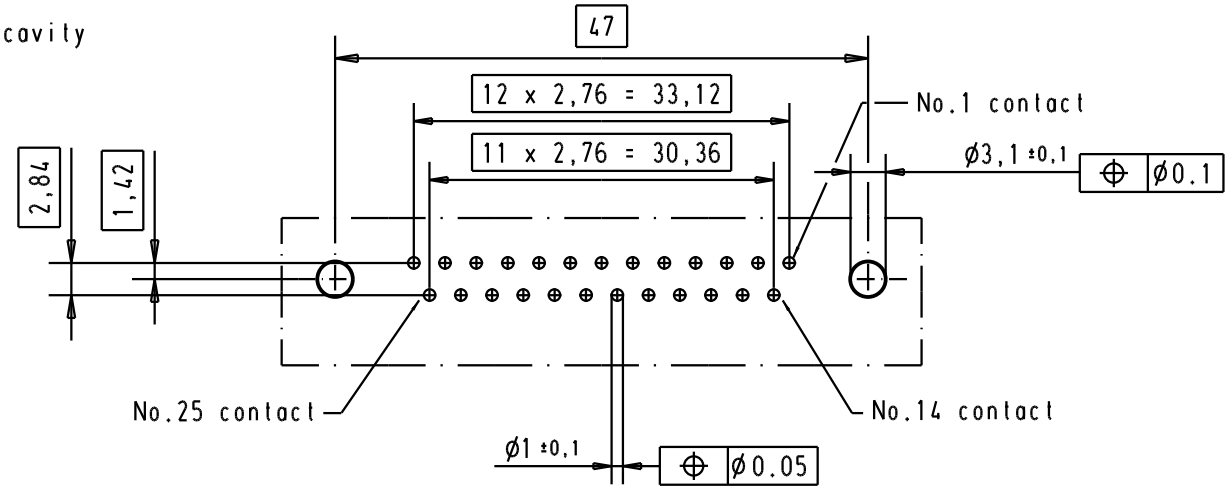

Part number	Nut thread	Performance level	Mod.	Dat.	Name
09 66 313 3601	M 3	1			
09 66 313 6601	M 3	2			
09 66 313 7601	M 3	3			
09 66 313 3602	4-40 UNC	1	31892	05/05/04	JH
09 66 313 6602	4-40 UNC	2	29773	18-APR-02	CV
09 66 313 7602	4-40 UNC	3	27960	01/dec/00	ALSPACE

	Dat.	Name
Detail.	01/dec/00	ALSPACE
Insp.		
Stand.		

All Dim. in mm
Orig. Size DIN A 4

D-Sub 25 poles standard angle female,solder pin with nut and hole

Maßstab/ *Scale* 1.5:1

HARTING EURL
F-95972 Paris

TB 0966313x60x

Sub.

Blatt/ *Page* 2

Downloaded from Arrow.com.