Copyright FCI.

FCIconnect.com

PRODUCT NUMBER	PITCH
VFxx50x000J0G	5.08 mm

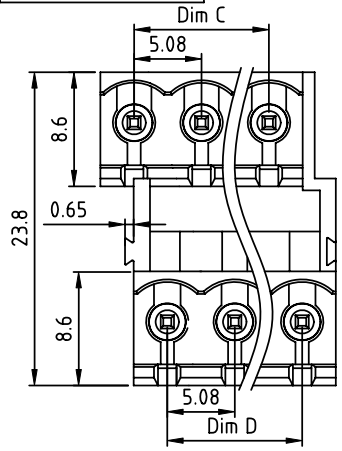

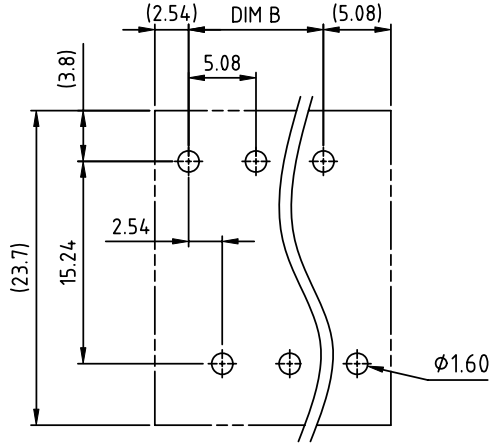

RECOMMENDED P.C.B LAYOUT
TOP VIEW

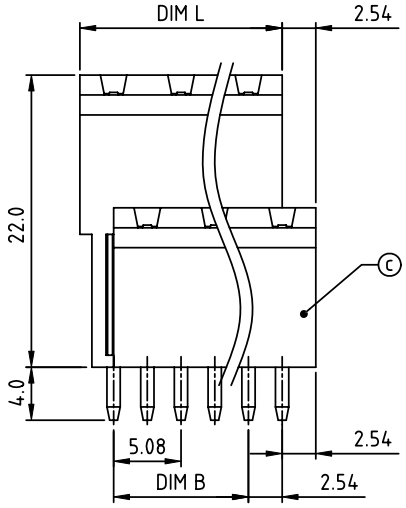

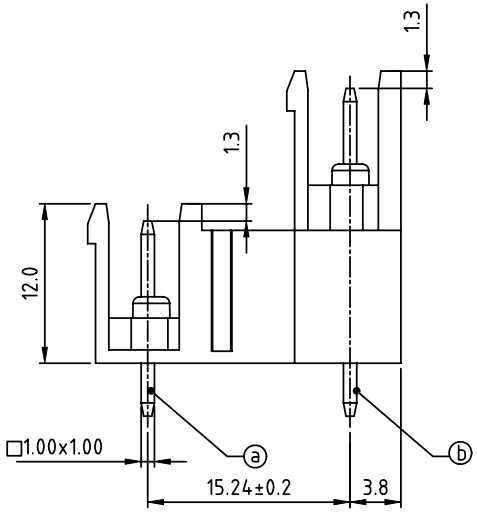

Material:
- Item ⓐ Short pin: Copper,Tin plated
- Item ⓑ Long pin: Copper,Tin plated
- Item ⓒ Terminal (housing): Thermoplastic (UL94V-0)

Electrical cULus
- Voltage rating: 300VAC
- Current rating: 10A
- Withstanding Voltage: 1.6KV
- Operating temperature: -40°C to +115°C
- Soldering temperature: 260°C±5°C/5 Sec
- Safety Approval: c UL us

PART NO.: VF xx 50 x 0 00J0 G

Dimension	
Dim L	N/2×5.08
Dim B	(N/2-1)×5.08
Dim C	(N/2-1)×5.08
Dim D	(N/2-1)×5.08

N=Number of poles

Poles	Tolerance
2×2P-2×5P	±0.15
2×6P-2×10P	±0.20
2×11P-2×15P	±0.25
2×16P-2×20P	±0.30
2×21P-2×24P	±0.35

Solid block
No. of poles
04 2x2poles
06 2x3poles
... ...
48 2x24poles

Color
0 Black (RAL9005)
2 Red (RAL3001/D)
3 Orange(RAL2011/P)
4 Yellow(RAL1018/A)
5 Green(RAL6018/T)
6 Blue (RAL5015/A)
8 Grey(RAL7035/D)
9 White(RAL1102)
C Green(RAL6018/U)

RoHS compliant
(lead<4%)
In copper Alloy

mat'l. code				surface ASME Y14.5	tolerance ASME Y14.5	projection
ltr	ecn no	dr	date	tolerances unless otherwise specified		
				angles	linear X.±0.5	MM
				X°±1°	X.X±0.3	
					X.XX±0.1	scale
				dr	EVIN ZHONG	042914
				engr	EVIN ZHONG	042914
				chr	HANKE FENG	042914
				appd	SHI JUN	042914
sheet index	revision	A				
	sheet	1				

product family: TERMINAL BLOCK

title: TERMINAL BLOCK
PLUGGABLE SOCKET,OPEN TYPE,VERTICAL

dwg no: VFxx50x000J0G — sheet 1 of 1 — size A4

type: CUSTOMER Drawing

form: A4mmXLc

Downloaded from Arrow.com.