REVISIONS

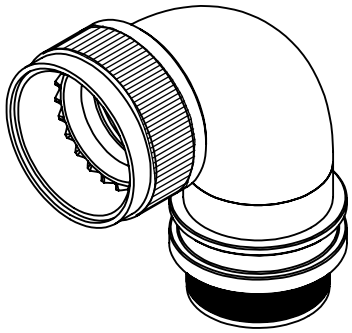

TXR54AB9W-1608AI

SERIES
- TXR: RING INCLUDED (SEE RING OPTION)
- TX: RING NOT INCLUDED

CONNECTOR INTERFACE
MATERIAL
FINISH
ANGLE
DASH NUMBER (TABLE 1)
ENTRY SIZE (TABLE 2)
RING OPTION
- AI - TO SUIT SINGLE BRAID
- BI - TO SUIT DOUBLE BRAID
- FOR TX, LEAVE BLANK

NOTES:

1. THIS PRODUCT IS DESIGNED TO TERMINATE A BRAIDED CABLE SHIELD AND A HEAT SHRINKABLE LIPPED BOOT TO A CONNECTOR.

2. THE INFORMATION CONTAINED ON THIS DRAWING SUPERSEDES THAT SHOWN IN SS-CH00-0250-008

3. SEE DRAWING TR FOR DETAIL ON TINEL-LOCK RING, RINGS ARE DESIGNED TO BE HEATED ELECTRICALLY,ALL RINGS ARE MARKED WITH THERMOCHROMIC PAINT WHICH CHANGES COLOUR WHEN INSTALLATION TEMPERATURE IS REACHED.

4. BACKSHELL TO BE PERMANENTLY MARKED/ BAGGED AND LABELLED WITH PART NUMBER AND BATCH NUMBER. (e.g. TXR54AB9W-1608 P123456)

5. AVAILABLE ENTRY SIZES ARE SHOWN IN TABLE 1.
FOR ALTERNATIVE ENTRY SIZES, PLEASE CONTACT DESIGN AUTHORITY.

6. BACKSHELL MATES TO MIL-DTL-26482 SERIES II / MIL-DTL-83723 SERIES I & III

RELEASED FOR PUBLICATION
ALL RIGHTS RESERVED.
© COPYRIGHT 20 BY
THIS DRAWING IS UNPUBLISHED.

DIMENSIONS: MILLIMETERS	DWN: C.WALLACE 15/04/2020	MATERIAL: SEE SS0076	FINISH: SEE SS0076
TOLERANCES UNLESS OTHERWISE SPECIFIED: GENERAL TOL LINEAR ±0,25MM ANGULAR ±1°	CHK: R.STYLES 17/04/2020	TE Connectivity	
	APVD: M.PAUL 15/04/2020	PART NUMBER: TXR54(9W) SERIES	
	PRODUCT SPEC: –	NAME: CONDUIT SWEPT ELBOW BACKSHELL	
	APPLICATION SPEC: –	SIZE A4 / CAGE CODE U5792 / DRAWING NO C-P46683	RESTRICTED TO
	WEIGHT:	CUSTOMER DRAWING	SCALE 1:1 / SHEET 1 OF 2 / REV AB

Downloaded from Arrow.com.

THIS DRAWING IS A CONTROLLED DOCUMENT.

REVISIONS

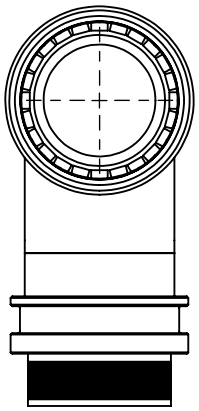

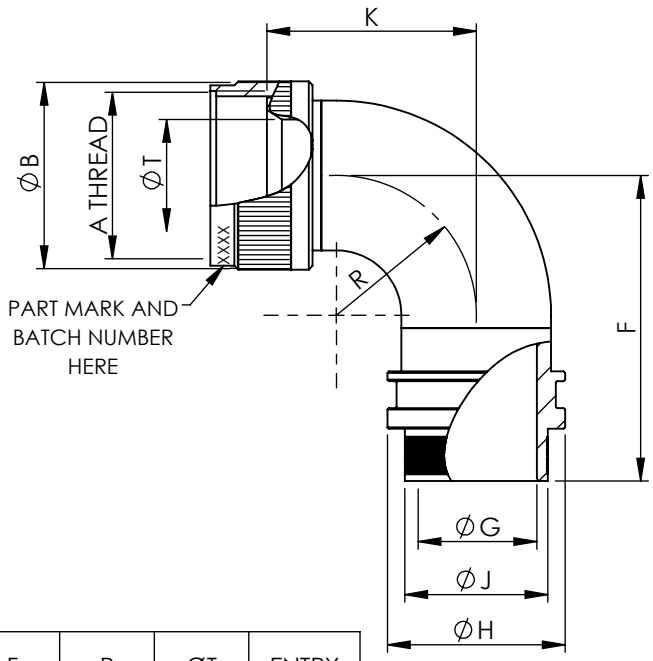

TABLE 1

ORDER NUMBER	A THREAD	ØB MAX	K MAX	F MAX	R REF.	ØT MIN	ENTRY SIZES
08	1/2 -20UNF	15,6	19,2	31,9	9,0	6,6	04
10	5/8 - 24UNEF	18,6	22,4	35,1	12,2	9,3	04, 05
12	3/4 - 20UNEF	21,7	25,6	38,3	15,4	12,8	06, 07
14	7/8 - 20UNEF	24,9	28,7	41,4	18,5	14,7	07, 08
16	1 - 20UNEF	28,2	31,9	44,6	21,7	17,8	08, 10
18	1 1/16 - 18UNEF	30,9	35,1	47,8	24,9	19,8	10, 12
20	1 3/16 - 18UNEF	34,1	38,3	51,0	28,1	23,0	12, 14
22	1 5/16 - 18UNEF	37,3	41,4	54,1	31,2	26,2	14, 16
24	1 7/16 - 18UNEF	40,4	44,6	57,3	34,4	29,1	16, 18

TABLE 2

ENTRY SIZE	ØG MIN	ØJ	ØH +/- 0,3
04	6,35	9,49 +/-0,04	14,0
05	7,92	11,06 +/-0,04	15,5
06	9,53	12,66 +/-0,04	17,1
07	11,10	14,21 +/-0,07	18,7
08	12,70	15,81 +/-0,07	20,3
10	15,88	18,96 +/-0,08	23,5
12	19,05	22,14 +/-0,08	26,7
14	22,23	25,30 +/-0,08	29,8
16	25,40	28,48 +/-0,08	33,0
18	28,58	31,65 +/-0,08	36,2

RELEASED FOR PUBLICATION
ALL RIGHTS RESERVED.
© COPYRIGHT 20 BY
THIS DRAWING IS UNPUBLISHED.

DIMENSIONS: MILLIMETERS

TOLERANCES UNLESS OTHERWISE SPECIFIED:

GENERAL TOL
LINEAR ±0,25MM
ANGULAR ±1°

DWN: C.WALLACE 15/04/2020
CHK: R.STYLES 17/04/2020
APVD: M.PAUL 15/04/2020
PRODUCT SPEC: –
APPLICATION SPEC: –
WEIGHT:

MATERIAL: SEE SS0076
FINISH: SEE SS0076

TE Connectivity

PART NUMBER: TXR54(9W) SERIES

NAME: CONDUIT SWEPT ELBOW BACKSHELL

SIZE	CAGE CODE	DRAWING NO	RESTRICTED TO
A4	U5792	C-P46683	

CUSTOMER DRAWING

SCALE 1:1 SHEET 2 OF 2 REV AB

Downloaded from Arrow.com.