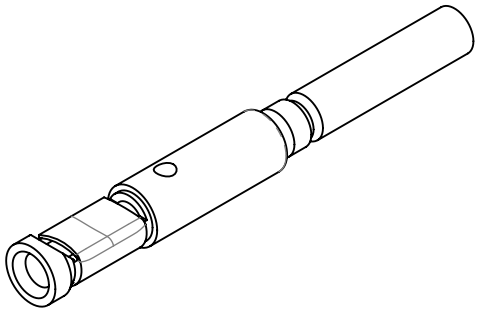

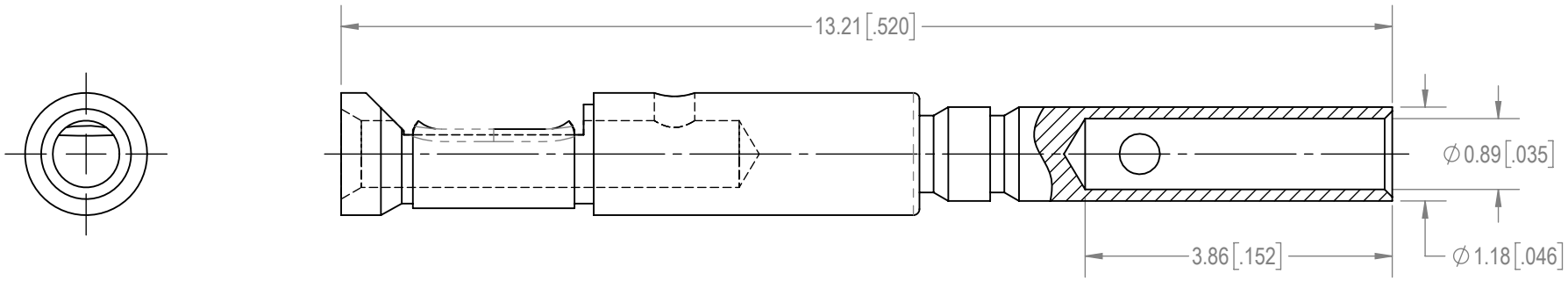


**NOTES:**

1. MATERIALS AND FINISH:
   CONTACT: PRECISION MACHINED COPPER ALLOY, 1.27 µ [.000050] GOLD OVER NICKEL PLATE.
   POSIBAND SPRING CLIP: BERYLLIUM COPPER, GOLD FLASH OVER NICKEL PLATE.
2. DETAILED PRODUCT, MECHANICAL AND ELECTRICAL INFORMATION IS AVAILABLE IN THE LATEST HIGH DENSITY D-SUB PRODUCT PUBLICATION AT CONNECTPOSITRONIC.COM.
3. CRIMPING TOOL INFORMATION IS AVAILABLE AT WWW.CONNECTPOSITRONIC.COM/CrimpToolCrosslist.
4. CONTACTS ARE COMPLIANT TO THE CURRENT RoHS DIRECTIVE.

| | | | |
|---|---|---|---|
| BY: YBK | CHK: EB | 3RD ANGLE | POSITRONIC BELIEVES THE DATA ON THE DRAWING TO BE RELIABLE. THE USER EMPLOYS SUCH INFORMATION AT HIS OWN DISCRETION AND RISK. POSITRONIC ASSUMES NO RESPONSIBILITY FOR RESULTS OBTAINED OR DAMAGES INCURRED FROM USE OF SUCH INFORMATION IN WHOLE OR IN PART. |
| APR: PA | RELEASED DATE: 2020-07-16 | SCALE: NTS | |
| TOLERANCES: ±0.03mm [.001 INCHES]FOR MALE CONTACT MATING DIAMETERS ±0.08mm [.003 INCHES]FOR CONTACT TERMINATION DIAMETERS ±0.13mm [.005 INCHES]FOR ALL OTHER DIAMETERS ±0.38mm [.015 INCHES]FOR ALL OTHER DIMENSIONS ±5° FOR ALL ANGLES DIMENSION ARE IN MILLIMETERS [INCHES] | | | |

Positronic® CONNECTPOSITRONIC.COM

| | | |
|---|---|---|
| PART NUMBER: FC8022D2/AA-15 | | SERIES: DD |
| TITLE: FC8022D2/AA-15 | | |
| CREATED ON: 2020-06-16 | SHEET: SHEET 1 OF 1 | REV: A |

Downloaded from Arrow.com.