THIS DRAWING IS UNPUBLISHED. RELEASED FOR PUBLICATION 2015
© COPYRIGHT 2015 Tyco Electronics AMP GmbH ALL RIGHTS RESERVED.

Project No. PRJ-14-5699
PRJ NO. PRJ-19-000901443

REVISIONS				
P	LTR	DESCRIPTION	DATE	DWN	APVD
	AB	PART DESCRIPTION UPDATE	02NOV2020	ST	SR
	A9	Dim baloons + 3D views added	19JAN2021	ST	SR
	B	Colur Batch remove for -2	14JUN2022	ST	-
	B1	One of the missing hole added in -3	12FEB2026	BS	MBK

NOTES
Bemerkungen

1 -
-

2 PRESS OUT FORCE FOR 0.63 CONTACT >25N WITH FEED RATE 25mm/min
Kontaktausdrueckkraft fuer 0.63 Kontakt >25N mit Vorschubgeschwindigkeit 25mm/min.

3 PRESS OUT FORCE FOR 2.8 CONTACT >60N WITH FEED RATE 25mm/min
Kontaktausdrueckkraft fuer 2.8 Kontakt >60N mit Vorschubgeschwindigkeit 25mm/min.

4 INTERFACE ACC. TO 114-18444, REV. A2, RELEASED 01NOV2004
Schnittstelle nach 114-18444, Rev.A2 vom 01NOV2004

5 TOLERANCE ACC. TO DIN EN ISO 8015, DIN EN ISO 14405-1
GENERAL TOL. ACC. TO DIN 16742 TG5, EXCEPT ANGLE DIM. (SEE TITLE BLOCK)
Tolerierung nach DIN EN ISO 8015, DIN EN ISO 14405-1
Allgemeintoleranzen nach DIN 16742 TG5, ausser Winkelmasse (siehe Schriftkopf)

6 PACKAGING IN TRAY ACC. TO V2293127
Verpackung im Tray nach V2293127

7 CONTACT SURFACE
MATING SIDE 1-3 µm Sn OVER Ni, SOLDER SIDE 1-3 µm Sn OVER Ni PIN TIP BLANK
Kontaktoberflaeche 1-3 µm Sn ueber Ni, Loetseitig 1-3 µm Sn ueber Ni blanke Pinspitze

8 CONTACT SURFACE
MATING SIDE 1-3 µm Sn OVER Ni, SOLDER SIDE 4-10 µm Sn OVER Ni
Kontaktoberflaeche 1-3 µm Sn ueber Ni, Loetseitig 4-10 µm Sn ueber Ni

9 INTERFACE ACC. TO 114-18444 IS NOT PART OF PPAP.
INTERFACE RESPONSIBILITY IS AT TE CONNECTIVITY
Schnittstelle nach 114-18444 ist nicht Bestandteil des PPAP.
Schnittstellenverantwortung liegt bei TE CONNECTIVITY

10 APPLICABLE FOR REFLOW SOLDERING PROCESS
Anwendbar fuer Reflow-Loetprozess

11 GOOD PART MARKING PUNCH MARK
Gutteil Markierung Koernepunkt

12 ■ ELECTRICAL 100% FINAL INSPECTION FOR CONTINUITY AND SHORT CIRCUIT
AS WELL AS EXISTENSE OF ALL CONTACTS (SERIES PRODUCTION ONLY)
Elektrische 100 % Endpruefung auf Durchgang und Kurzschluss,
sowie das Vorhandensein aller Kontakte (nur Serienproduktion)

13 MISSING DIMENSIONS ARE TAKEN FROM CAD-MODEL 2293127-1-/02-/03/1- -1/3- -1
Fehlende Masse sind aus dem CAD Modell 2293127-1-/02-/03/1- -1/3- -1 zu entnehmen

14 -
-

15 COLOUR SIMILAR TO RAL 9010 (TARGET), WHITE BUT COLOUR VARIATION
FROM RAL 9003 (LIGHTEST) - RAL 9002 (DARKEST) PERMITTED
Farbe aehnlich RAL 9010 (Ziel), weiss. Farbvarianten von RAL 9003 (hellste) zu RAL 9002 (dunkelste)

2293127-1 AS SHOWN
wie gezeichnet

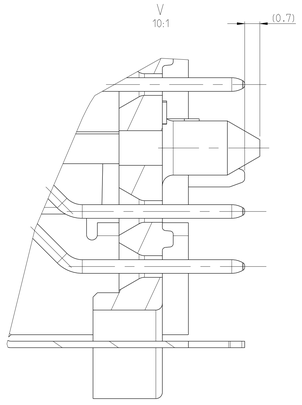

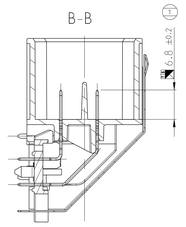

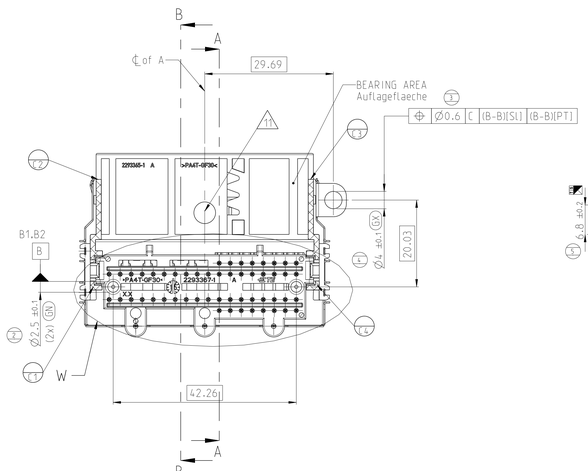

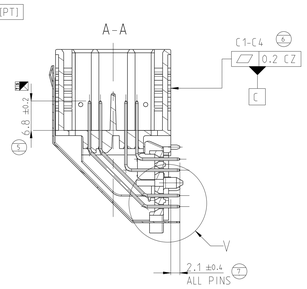

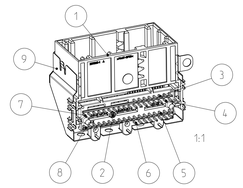

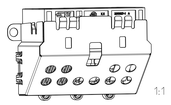

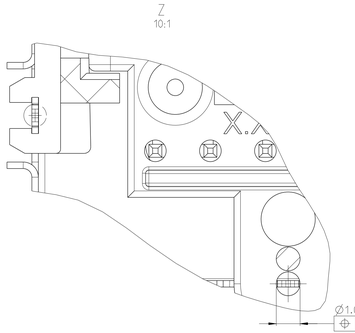

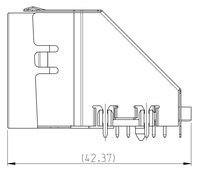

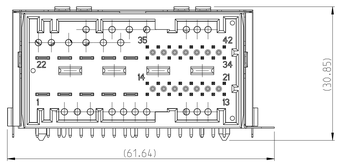

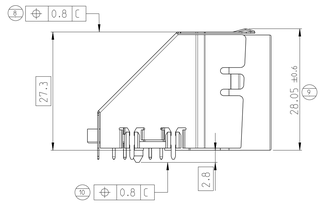

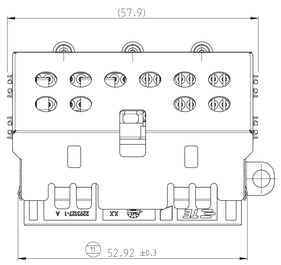

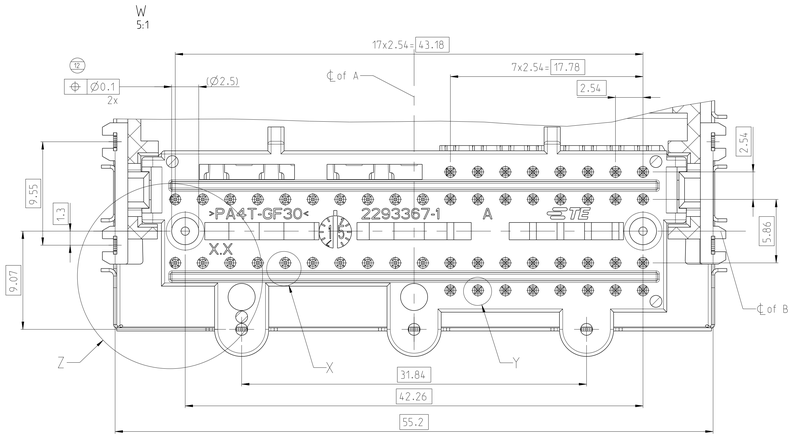

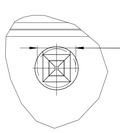

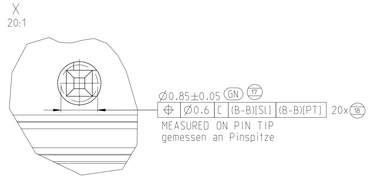

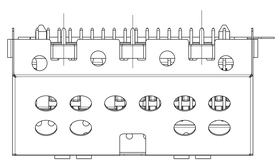

RECOMMENDED PCB LAYOUT
Empfohlenes Leiterplattenlayout

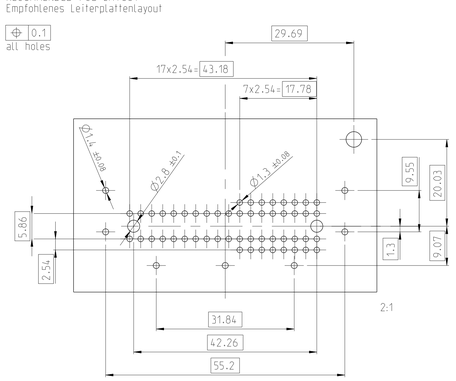

CODING C WITH SHIELD
Kodierung C mit Shield
B1 2293127-3 AS SHOWN
wie gezeichnet

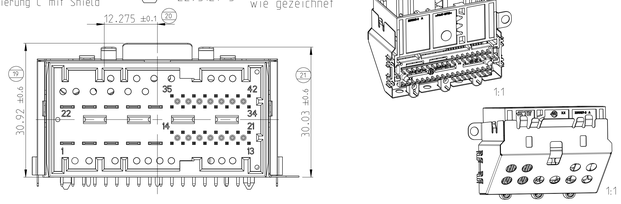

CODING B WITHOUT SHIELD
Kodierung B ohne Shield
2293127-2 AS SHOWN
wie gezeichnet

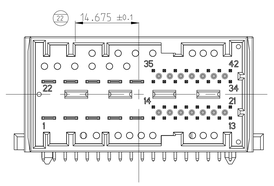

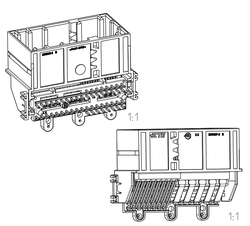

CODING A WITHOUT SHIELD
Kodierung A ohne Shield
3-2293127-1 AS SHOWN
wie gezeichnet

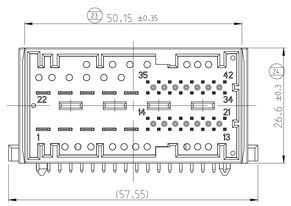

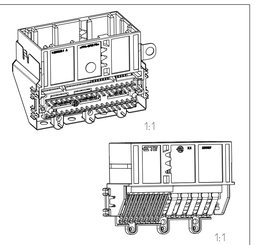

CODING A WITH SHIELD
Kodierung A mit Shield
1-2293127-1 AS SHOWN
wie gezeichnet

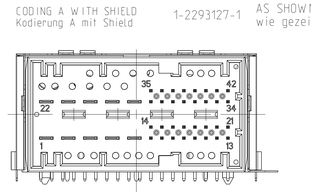

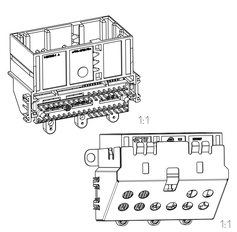

2-967385-1	3-2293127-1 WITHOUT SHIELD FLAMMABILITY: V-0	25g	A	A	TAB 2.8x0.6 II	CU-ALLOY	8	5	8
					TAB 2.8x0.6 I	CU-ALLOY		5	7
					MQS-PIN IV	CU-ALLOY	7	8	6
					MQS-PIN III	CU-ALLOY		8	5
					MQS-PIN II	CU-ALLOY		8	4
					MQS-PIN I	CU-ALLOY		8	3
					CENTER PLATE	PPA-GF30 FR NO REGRIND ALLOWED	BLACK	1	2
					42 POS. HEADER HSG	PPA-GF30 FR NO REGRIND ALLOWED	BLACK	1	1
2-967385-1	1-2293127-1 WITH SHIELD FLAMMABILITY: V-0	35g	A	A	SHIELD COD A	COLD STRIP t=0.3 DC03 C590	Cu-Flash UNDER 3-5µm Sn STAMPING EDGES BLANK	1	9
					TAB 2.8x0.6 II	CU-ALLOY	8	5	8
					TAB 2.8x0.6 I	CU-ALLOY		5	7
					MQS-PIN IV	CU-ALLOY	7	8	6
					MQS-PIN III	CU-ALLOY		8	5
					MQS-PIN II	CU-ALLOY		8	4
					MQS-PIN I	CU-ALLOY		8	3
					CENTER PLATE	PPA-GF30 FR NO REGRIND ALLOWED	BLACK	1	2
					42 POS. HEADER HSG	PPA-GF30 FR NO REGRIND ALLOWED	BLACK	1	1
2-967385-3	2293127-3 WITHT SHIELD FLAMMABILITY: HB	35g	A	C	SHIELD COD C	COLD STRIP t=0.3 DC03 C590	Cu-Flash UNDER 3-5µm Sn STAMPING EDGES BLANK	1	9
					TAB 2.8x0.6 II	CU-ALLOY	8	5	8
					TAB 2.8x0.6 I	CU-ALLOY		5	7
					MQS-PIN IV	CU-ALLOY	7	8	6
					MQS-PIN III	CU-ALLOY		8	5
					MQS-PIN II	CU-ALLOY		8	4
					MQS-PIN I	CU-ALLOY		8	3
					CENTER PLATE	PPA-GF30 NO REGRIND ALLOWED	BLACK	1	2
					42 POS. HEADER HSG	PPA-GF30 NO REGRIND ALLOWED	WHITE 15	1	1
2-967385-2	2293127-2 WITHOUT SHIELD FLAMMABILITY: HB	25g	B	B	TAB 2.8x0.6 II	CU-ALLOY	8	5	8
					TAB 2.8x0.6 I	CU-ALLOY		5	7
					MQS-PIN IV	CU-ALLOY	7	8	6
					MQS-PIN III	CU-ALLOY		8	5
					MQS-PIN II	CU-ALLOY		8	4
					MQS-PIN I	CU-ALLOY		8	3
					CENTER PLATE	PPA-GF30 NO REGRIND ALLOWED	BLACK	1	2
					42 POS. HEADER HSG	PPA-GF30 NO REGRIND ALLOWED	NATURAL	1	1
2-967385-1	2293127-1 WITHT SHIELD FLAMMABILITY: HB	35g	A	A	SHIELD COD A	COLD STRIP t=0.3 DC03 C590	Cu-Flash UNDER 3-5µm Sn STAMPING EDGES BLANK	1	9
					TAB 2.8x0.6 II	CU-ALLOY	8	5	8
					TAB 2.8x0.6 I	CU-ALLOY		5	7
					MQS-PIN IV	CU-ALLOY	7	8	6
					MQS-PIN III	CU-ALLOY		8	5
					MQS-PIN II	CU-ALLOY		8	4
					MQS-PIN I	CU-ALLOY		8	3
					CENTER PLATE	PPA-GF30 NO REGRIND ALLOWED	BLACK	1	2
					42 POS. HEADER HSG	PPA-GF30 NO REGRIND ALLOWED	BLACK	1	1
MATING PART	TE ASSY NO. ORDER NO.	THEO. WEIGHT	REV.	COD.	DESCRIPTION	MATERIAL	COLOR SURFACE	QTY.	ITEM

THIS DRAWING IS A CONTROLLED DOCUMENT.

DRN	D. Meininger	13MAY2015
CHK	A. Burkhard	06JUL2015
APP	R. Fieberling	06JUL2015

DIMENSIONS: mm
TOLERANCES UNLESS OTHERWISE SPECIFIED:
0 PLC ±-
1 PLC ±-
2 PLC ±-
3 PLC ±-
4 PLC ±-
ANGLES 4°
FINISH -
MATERIAL - -
PRODUCT SPEC -
APPLICATION SPEC -
WEIGHT -

TE Connectivity

NAME 42POS HEADER ASSY, REFLOW HEADER, 90
42pol. Header Assy, Reflow Header, 90

SIZE A0 | CAGE CODE 00779 | DRAWING NO ©=2293127 | RESTRICTED TO -
SCALE 5:1 | SHEET 1 OF 1 | REV B1
Customer Drawing

4806 (3/13)
Downloaded from Arrow.com.