KT Series

Full SMT Top & Side Actuated Sealed Tactile Switch

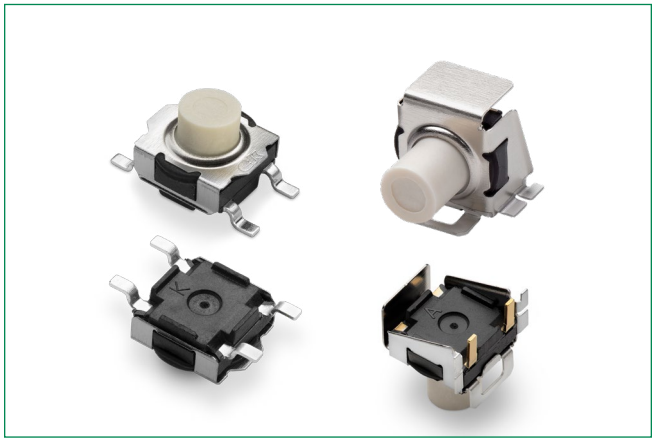

Description

The KT series full SMT top and side actuated sealed tactile switch has a high shear force with an extended bracket that gives it a long operating life. This feature, along with the KT's G or J terminations, makes it ideal for computer, instrumentation and power supply applications.

Features & Benefits

- Full SMT side-actuated tactile switch
- SMT top-actuated tactile switch with G or J terminations
- High shear force with extended bracket
- Easy to pick & place with top plate tab
- Rubber or hard plastic actuator
- Press fit or snap fit caps
- RoHS compliant and compatible

Applications

- Telecommunications
- Computer products
- Instrumentation
- Power supply

Specifications

Contact Arrangement	SPST, N.O.
Terminals	SMT termination
Packaging	Switches supplied in anti-static tape and reels per EIA 481-2. Tape and cover strip are conductive for use near statically sensitive components.

Electrical Characteristics

Contact Rating	1.0 VA max. @ 32 V AC or DC max.
Electrical & Mechanical Life	100,000 make-and-break cycles at full load.
Dielectric Strength	250 Vrms min. @ sea level
Contact Resistance	Below 50 mΩ typ. initial @ 2-4 V DC, 100 mA.
Insulation Resistance	10^9 Ω min.

Environmental Characteristics

	Silver	Gold
Operating Temperature	-40˚C to 90˚C	-40˚C to 125˚C

Process

Soldering	Per MIL-STD-202F method 208D, or EIA RS-186E method 9 (1 hour steam aging).
Degree of Protection	IP57; protection against harmful dust deposits, full-scale voltage protection.

Notes:
Specifications listed above are for switches with standard options. For information on specific and custom switches, consult Customer Service Center.

© 2026 Littelfuse, Inc.
Specifications are subject to change without notice.
Revised: MI 10/14/26

Downloaded from Arrow.com.

KT Series
Full SMT Top & Side Actuated Sealed Tactile Switch

Series
KT11

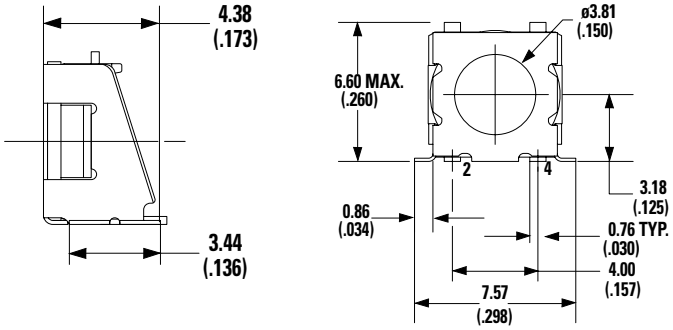

Actuator

B0 Soft, Flush[1]

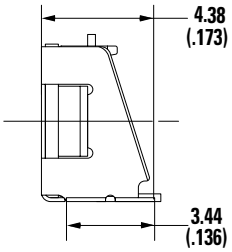

B1 Soft, 0.64mm[1]

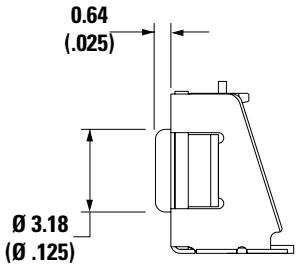

B2 Soft, 2.24mm[1]

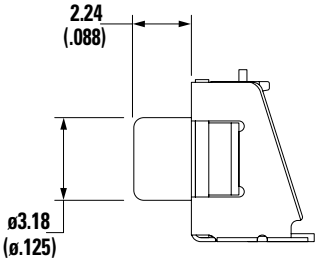

P2 Hard, 2.36mm

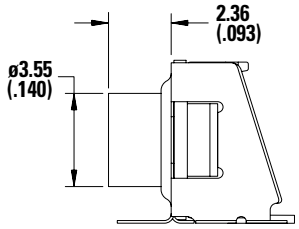

P3 Hard, 1.12mm

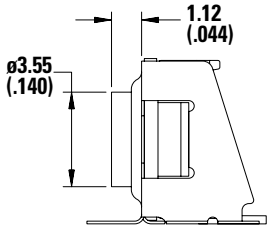

P4 Hard, 3.96mm[2]

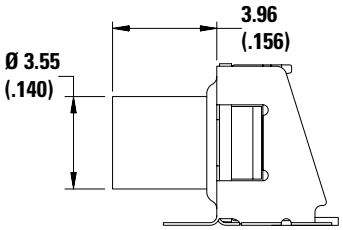

S1 Ø0,1" For Press Fit Caps[3]

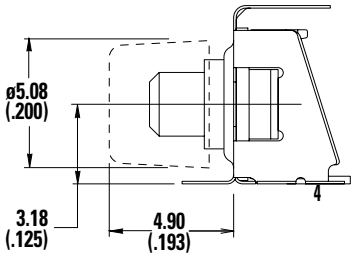

S2 Ø0,14" For Snap Fit Caps[3]

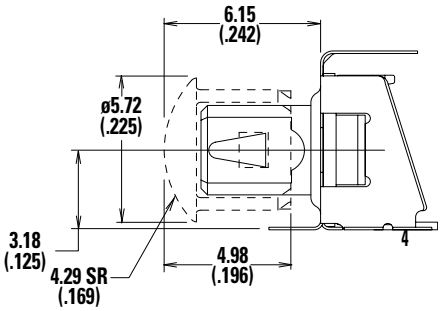

Notes:
1: B0, B1 & B2 available with A, A1 & A3 mounting bracket only.
2: P2, P3, P4 actuators suitable with A1 & A2 mounting bracket only.
3: S1 & S2 available with A1 & A2 mounting bracket only.
4: JM available with B0, B1, B2, P2, P3, P4 without mounting bracket.

© 2026 Littelfuse, Inc.
Specifications are subject to change without notice.
Revised: MI 10/14/26

Downloaded from Arrow.com.

KT Series
Full SMT Top & Side Actuated Sealed Tactile Switch

Orientation & Mounting Style

SM Top Gullwing

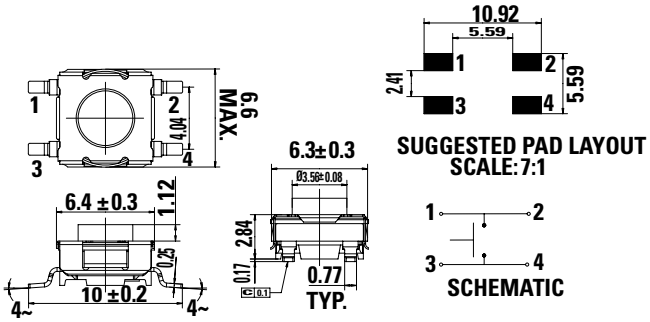

JM Top J Bend

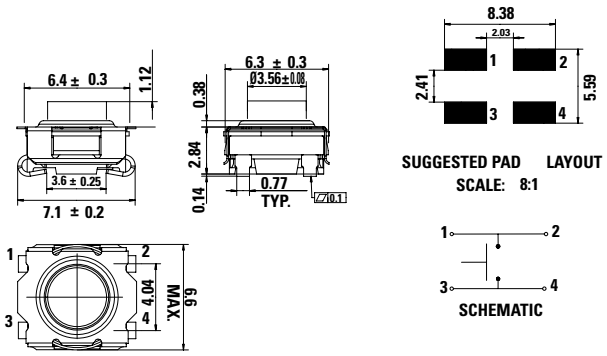

SAM Right Angle

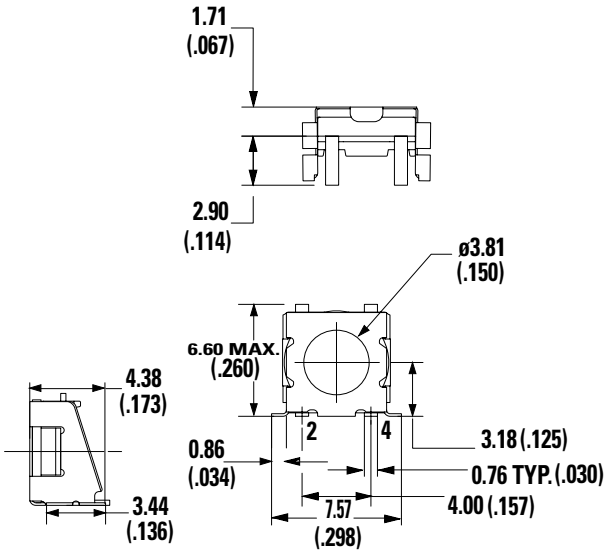

SA1M Right Angle with Front Solder Pad

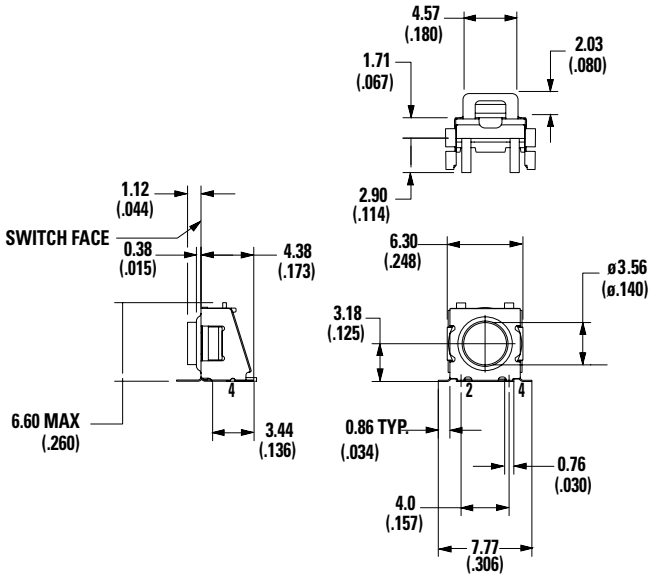

© 2026 Littelfuse, Inc.
Specifications are subject to change without notice.
Revised: MI 10/14/26

Downloaded from Arrow.com.

KT Series
Full SMT Top & Side Actuated Sealed Tactile Switch

SA2M Right Angle with Front Solder Pad and Pick & Place Tab

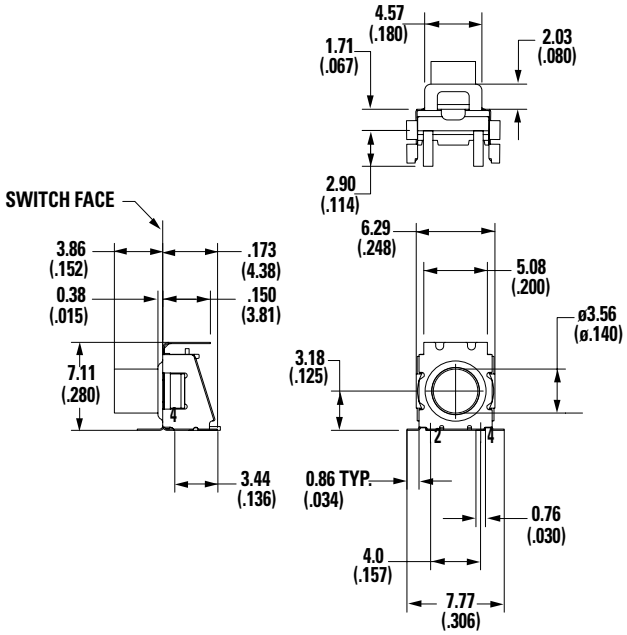

SA3M Right Angle with Pick & Place Tab

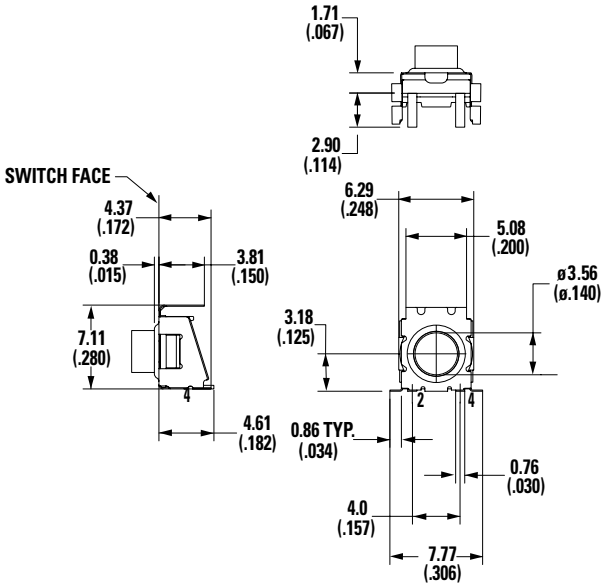

Pad Layout SA1M & SA2M Mounting Bracket

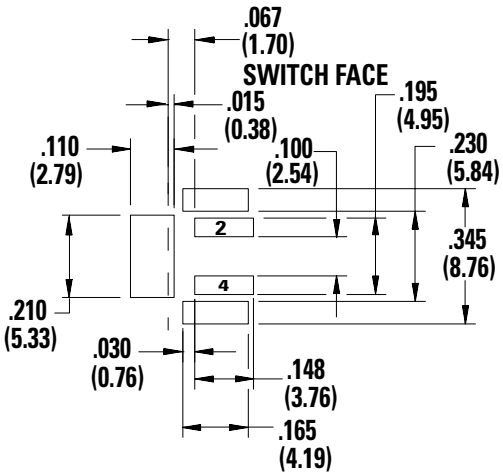

Pad Layout SAM & SA3M Mounting Bracket

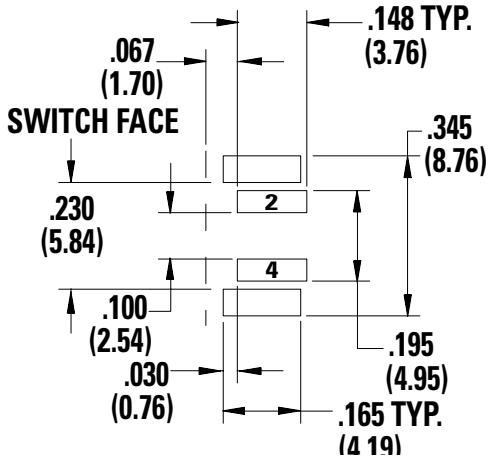

Schematic

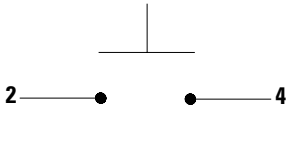

© 2026 Littelfuse, Inc.
Specifications are subject to change without notice.
Revised: MI 10/14/26

Downloaded from Arrow.com.

KT Series
Full SMT Top & Side Actuated Sealed Tactile Switch

Button

02 Press Fit

Part Number	Internal Part Number	Button Color
BTN KT11 02 80	5081 01000	Ivory (Natural)
BTN KT11 02 90	5081 02000	Black
BTN KT11 02 40	5081 03000	Red

Materials: Nylon
Finish: Gloss



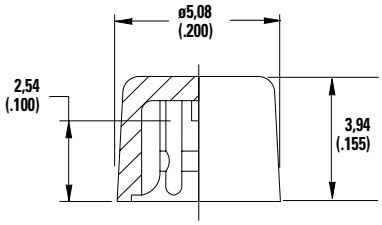

03 Snap Fit, High Temperature

Part Number	Internal Part Number	Button Color
BTN KT11 03 80	685B01000	Ivory (Natural)
BTN KT11 03 90	685B02000	Black

Materials: Nylon
Finish: Gloss



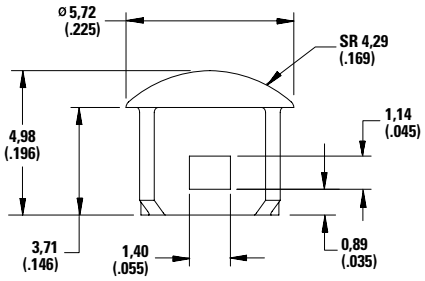

Ordering Number

Our easy build-a-switch concept allows you to mix and match options to create the switch you need. To order, select desired option from each category and place it in the appropriate box. For any part number different from those listed above, please consult your local representative.

Switch

KT11 - xx - xxxx - 3 - x - xxx

Actuator
B0[1]**:** Soft, flush
B1[1]**:** Soft, 0.54mm
B2[1]**:** Soft, 2.24mm
P2[2]**:** Hard, 2.36mm
P3[2]**:** Hard, 1.12mm
P4[2]**:** Hard, 3.96mm
S1[3]**:** Ø0.1", for Press Fit Caps
S2[3]**:** Ø0.14", for Snap Fit Caps (with anti-rotation)

Orientation and Mounting
SM: Top Gullwing
JM: Top J Bend[4]
SAM: Right angle
SA1M: Right angle with front solder pad
SA2M: Right angle with front solder pad and pick & place tab
SA3M: Right angle with pick & place tab

3

Contact Plating
4: Silver
5: Gold

LFS: RoHS compliant and compatible, Silver plated
LFG: RoHS compliant and compatible, Gold plated

Notes
1. B0, B1 & B2 available with A, A1 & A3 mounting bracket only.
2. P2, P3, P4 actuators suitable with A1 & A2 mounting bracket only.
3. S1 & S2 available with A1 & A2 mounting bracket only.
4. JM available with B0, B1, B2, P2, P3, P4 without mounting bracket.

Disclaimer Notice - Information furnished is believed to be accurate and reliable. However, users should independently evaluate the suitability of and test each product selected for their own applications. Littelfuse products are not designed for, and may not be used in, all applications. Read complete Disclaimer Notice at http://www.littelfuse.com/disclaimer-electronics.

© 2026 Littelfuse, Inc.
Specifications are subject to change without notice.
Revised: MI 10/14/26

Downloaded from Arrow.com.

KT Series
Full SMT Top & Side Actuated Sealed Tactile Switch

Mechanical Characteristics
Right Angle

Supply Status	LITTELFUSE Orderable Part Number	Description	Contact & Terminals Plating	Operating Force Fa (Newtons)	Operating Life (operations)	Electrical Travel (mm)	Orientation & Mounting	Actuator Type
✓	YT1025550FPLFS	KT11B1SA1M34LFS	Silver	2.4±0.48	100,000	0.3±0.1	With front solder pad	Soft, 0.54mm
✓	YT1025570FPLFS	KT11B1SA3M34LFS	Silver	2.4±0.48	100,000	0.3±0.1	With pick & place tab	Soft, 0.54mm
✓	YT1025540FPLFS	KT11B1SAM34LFS	Silver	2.4±0.48	100,000	0.3±0.1	Standard	Soft, 0.54mm
✓	YT1026740FPLFG	KT11B1SAM35LFG	Gold	2.4±0.48	100,000	0.3±0.1	Standard	Soft, 0.54mm
✓	YT1036770FPLFG	KT11B2SA3M35 LFG	Gold	2.4±0.48	100,000	0.3±0.1	With pick & place tab	Soft, 2.24mm
✓	YT1035540FPLFS	KT11B2SAM34LFS	Silver	2.4±0.48	100,000	0.3±0.1	Standard	Soft, 2.24mm
✓	YT1036740FPLFG	KT11B2SAM35LFG	Gold	2.4±0.48	100,000	0.3±0.1	Standard	Soft, 2.24mm
✓	YT1043550FPLFS	KT11P2SA1M34LFS	Silver	2.4±0.48	100,000	0.3±0.1	With front solder pad	Hard, 2.36mm
✓	YT1044750FPLFG	KT11P2SA1M35LFG	Gold	2.4±0.48	100,000	0.3±0.1	With front solder pad	Hard, 2.36mm
✓	YT1043560FPLFS	KT11P2SA2M34LFS	Silver	2.4±0.48	100,000	0.3±0.1	With front solder pad, pick & place tab	Hard, 2.36mm
✓	YT1044760FPLFG	KT11P2SA2M35LFG	Gold	2.4±0.48	100,000	0.3±0.1	With front solder pad, pick & place tab	Hard, 2.36mm
✓	YT1043570FPLFS	KT11P2SA3M34LFS	Silver	2.4±0.48	100,000	0.3±0.1	With pick & place tab	Hard, 2.36mm
✓	YT1044770FPLFG	KT11P2SA3M35LFG	Gold	2.4±0.48	100,000	0.3±0.1	With pick & place tab	Hard, 2.36mm
✓	YT1053550FPLFS	KT11P3SA1M34LFS	Silver	2.4±0.48	100,000	0.3±0.1	With front solder pad	Hard, 1.12mm
✓	YT1053560FPLFS	KT11P3SA2M34LFS	Silver	2.4±0.48	100,000	0.3±0.1	With front solder pad, pick & place tab	Hard, 1.12mm
✓	YT1054760FPLFG	KT11P3SA2M35LFG	Gold	2.4±0.48	100,000	0.3±0.1	With front solder pad, pick & place tab	Hard, 1.12mm
✓	YT1053570FPLFS	KT11P3SA3M34LFS	Silver	2.4±0.48	100,000	0.3±0.1	With pick & place tab	Hard, 1.12mm
✓	YT1054770FPLFG	KT11P3SA3M35LFG	Gold	2.4±0.48	100,000	0.3±0.1	With pick & place tab	Hard, 1.12mm
✓	YT1063550FPLFS	KT11P4SA1M34LFS	Silver	2.4±0.48	100,000	0.3±0.1	With front solder pad	Hard, 3.96mm
✓	YT1064750FPLFG	KT11P4SA1M35LFG	Gold	2.4±0.48	100,000	0.3±0.1	With front solder pad	Hard, 3.96mm
✓	YT1063560FPLFS	KT11P4SA2M34LFS	Silver	2.4±0.48	100,000	0.3±0.1	With front solder pad, pick & place tab	Hard, 3.96mm
✓	YT1064760FPLFG	KT11P4SA2M35LFG	Gold	2.4±0.48	100,000	0.3±0.1	With front solder pad, pick & place tab	Hard, 3.96mm
✓	YT1073550FPLFS	KT11S1SA1M34LFS	Silver	2.4±0.48	100,000	0.3±0.1	With front solder pad	Ø0.1", for Press Fit Caps
✓	YT1073560FPLFS	KT11S1SA2M34LFS	Silver	2.4±0.48	100,000	0.3±0.1	With front solder pad, pick & place tab	Ø0.1", for Press Fit Caps
✓	YT1074760FPLFG	KT11S1SA2M35LFG	Gold	2.4±0.48	100,000	0.3±0.1	With front solder pad, pick & place tab	Ø0.1", for Press Fit Caps
✓	YT1073570FPLFS	KT11S1SA3M34LFS	Silver	2.4±0.48	100,000	0.3±0.1	With pick & place tab	Ø0.1", for Press Fit Caps
✓	YT1083560FPLFS	KT11S2SA2M34LFS	Silver	2.4±0.48	100,000	0.3±0.1	With front solder pad, pick & place tab	Ø0.14", for Snap Fit Caps (with anti-rotation)
✓	YT1084760FPLFG	KT11S2SA2M35LFG	Gold	2.4±0.48	100,000	0.3±0.1	With front solder pad, pick & place tab	Ø0.14", for Snap Fit Caps (with anti-rotation)

© 2026 Littelfuse, Inc.
Specifications are subject to change without notice.
Revised: MI 10/14/26

Downloaded from Arrow.com.

KT Series
Full SMT Top & Side Actuated Sealed Tactile Switch

Top Operated

Supply Status	LITTELFUSE Orderable Part Number	Description	Contact & Terminals Plating	Operating Force Fa (Newtons)	Operating Life (operations)	Electrical Travel (mm)	Orientation & Mounting	Actuator Type
✓	YT1015520FPLFS	KT11B0SM34LFS	Silver	2.4±0.48	100,000	0.3±0.1	Top Gullwing	Soft, flush
✓	YT1025520FPLFS	KT11B1SM34LFS	Silver	2.4±0.48	100,000	0.3±0.1	Top Gullwing	Soft, 0.54mm
✓	YT1035520FPLFS	KT11B2SM34LFS	Silver	2.4±0.48	100,000	0.3±0.1	Top Gullwing	Soft, 2.24mm
✓	YT1043520FPLFS	KT11P2SM34LFS	Silver	2.4±0.48	100,000	0.3±0.1	Top Gullwing	Hard, 2.36mm
✓	YT1053520FPLFS	KT11P3SM34LFS	Silver	2.4±0.48	100,000	0.3±0.1	Top Gullwing	Hard, 1.12mm
✓	YT1063520FPLFS	KT11P4SM34LFS	Silver	2.4±0.48	100,000	0.3±0.1	Top Gullwing	Hard, 3.96mm
✓	YT1015530FPLFS	KT11B0JM34LFS	Silver	2.4±0.48	100,000	0.3±0.1	Top J Bend	Soft, flush
✓	YT1025530FPLFS	KT11B1JM34LFS	Silver	2.4±0.48	100,000	0.3±0.1	Top J Bend	Soft, 0.54mm
✓	YT1026730FPLFG	KT11B1JM35LFG	Gold	2.4±0.48	100,000	0.3±0.1	Top J Bend	Soft, 0.54mm
✓	YT1035530FPLFS	KT11B2JM34LFS	Silver	2.4±0.48	100,000	0.3±0.1	Top J Bend	Soft, 2.24mm
✓	YT1043530FPLFS	KT11P2JM34LFS	Silver	2.4±0.48	100,000	0.3±0.1	Top J Bend	Hard, 2.36mm
✓	YT1053530FPLFS	KT11P3JM34LFS	Silver	2.4±0.48	100,000	0.3±0.1	Top J Bend	Hard, 1.12mm
✓	G01631448	KT11P3JM35 LFG	Gold	2.4±0.48	100,000	0.3±0.1	Top J Bend	Hard, 1.12mm
✓	YT1063530FPLFS	KT11P4JM34LFS	Silver	2.4±0.48	100,000	0.3±0.1	Top J Bend	Hard, 3.96mm

Notes: Supply status: ✓ Available for ordering;

Mechanical Characteristics

Caps

Supply Status	LITTELFUSE	Button Color	Feature
✓	685B01000	Ivory (Natural)	Snap Fit, High Temperature
✓	685B02000	Black	Snap Fit, High Temperature
✓	508101000	White	Press Fit
✓	508102000	Black	Press Fit
✓	508103000	Red	Press Fit

Note: Supply status: ✓ : Available for ordering.

© 2026 Littelfuse, Inc.
Specifications are subject to change without notice.
Revised: MI 10/14/26

Downloaded from Arrow.com.